Node B V2 Rack Mount

Installation Guide

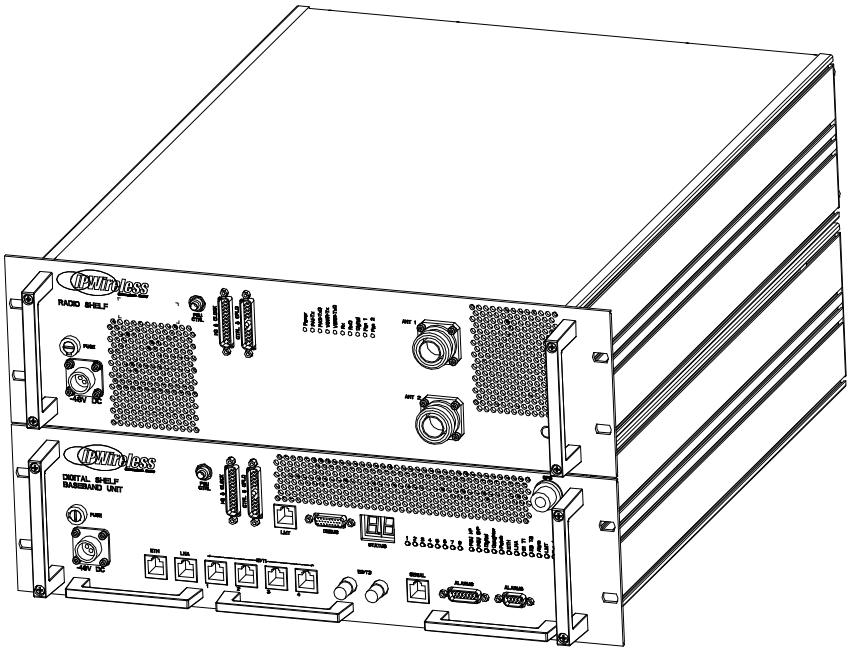

Information in this document and the products described are subject to change without notice.

©2000-2003 IPWireless, Inc. All rights reserved.

Reproduction, alteration, or distribution in any manner whatsover without the written permission of IPWireless Inc, is strictly forbidden.

Trademarks used in this text: the IPWireless logo, icon and IPWireless Broadband Modem are trademarks of IPWireless, Inc.; Microsoft, Windows, and Windows NT are registered trademarks of Microsoft Corporation.

Other trademarks and trade names may be used in this document to refer to either the entities claiming the marks and names or their products, IPWireless, Inc., disclaims any proprietary interest in trademarks and trade names other than its own.

September 2003 **Part No. IPW-0695**

Table of Contents

1. Release Version 5
2. Safety Precautions 6
3. General Warnings 6
4. Overview 7
5. General Specifications 8
6. Installation 13
Step 1 Pre-Installation 13
Step 2 Parts Shipped & Tools Required 14
Step 3 Site Preparations for Node B Installation 18
Step 4 Mounting Installations 21
Step 5 Ground Installation 23
Step 5 Ground Installation 24
Step 6 DC Power Connection-Digital 25
Step 7 DC Power Connection-Radio 26
Step 8 Inter-Shelf Connections 27
Step 9 Backhaul Connections (Iub) to INC 28
Step 10 Antenna Cabling - Installation 31
Step 11 Alarm Connections 32
Step 12 GPS Installation & Operation 34
7. APPENDIX 36
Appendix A - Installation Check Card 36
Appendix B - Glossary 37

Table of Tables

Table 2-1 : Safety Sumbols 6
Table 5-1 : Specifications 8
Table 5-2 : Node B Model Types 10
Table 6-1 : Packing List 14
Table 6-2 : Tools Required 17
Table 6-3 : Materials Required 17
Table 6-4 : Site Preparation Checklist 18
Table 6-5 : Ethernet Pin-outs using RJ45 29
Table 6-6 : T1/E1 Pin-outs 30
Table 6-7 : Alarm Inputs 33
Table 6-7 : Alarm Outputs 33

Table of Figures

Figure 5-1 : Node B Rack Mount – Digital Shelf Physical Dimensions 8
Figure 5-2 : Node B Rack Mount – RF Shelf Physical Dimensions 9
Figure 5-3 : General Description – Front View 10
Figure 5-4 : Digital Shelf Faceplate 11
Figure 5-5 : Radio Shelf Faceplate 12
Figure 6-1 : Sales Pack Crate – Digital & Radio Shelf Packages 15
Figure 6-2 : Digital Shelf Package + Contents 15
Figure 6-3 : Radio Shelf Package + Contents 16
Figure 6-4 : Node B Rack Mount – Single Shelf (all cables shown) 19
Figure 6-5 : Node B Rack Mount – Double Shelf (all cables shown) 19
Figure 6-6 : Mounting Rack + Support Shelves/Rails 21
Figure 6-7: Installing Digital Shelf 22
Figure 6-8 : Installing Radio Shelf 23
Figure 6-9 : Earth Connection on the rear of each shelf 24
Figure 6-10 : Power Connection to the digital shelf 25
Figure 6-11 : Power Connection to the radio shelf 26
Figure 6-12: Interface Cable Connection 27
Figure 6-13 : Backhaul Connections 28
Figure 6-15 : Ethernet Pin-outs using RJ45 29
Figure 6-15 : Antenna Connections & Routing 31
Figure 6-17 : Alarm Outputs & Inputs 32
Figure 6-18 : GPS Antenna 34
Figure 6-18 : GPS Antenna Connection 35

1. Release Version

Date	Version	Author	Reason For Change Issue
8th September 2003	0.0.1	L.Mujegu	Initial Version
13th November 2003	0.0.2	L.Mujegu	Typo corrections
28th November 2003	0.0.3	L.Mujegu	Typo corrections

2. Safety Precautions

Table 2-1 : Safety Sumbols

GENERAL WARNING	ELECTRICAL HAZARD	GROUND
GENERAL SAFETY PRECAUTION	**VOLTAGE:** Care should be taken when servicing this area. Misuse or inappropriate contact with these areas could result in physical harm and property damage	**GROUND:** Site for grounding equipment

These cautionary signs are used on the equipment and within this manual. For safety of personnel and protection of equipment observe these precautions when installing, operating or servicing the equipment and surrounding areas.

3. General Warnings

Electrical

Power Supply – cord fitted for AC or DC. DO NOT adapt to a different configuration. Power supply circuits may carry high voltages. Remove rings, watches, and other jewellery before working with this type of equipment.

Batteries – Certain installation of this equipment require working with lead acid batteries, batteries present chemical, electric and gaseous hazards. Batteries are not supplied by IPWireless for the Node B equipment although UPS systems may be coupled with the device in order to provide back up power in case of power outages.

Physical

Weight – The RF or Digital shelves of the Rack Node B can weigh up to 15kgs (33 pounds) each depending on configurations. Precautions should be taken, depending on the installation site conditions, in lifting and general handling the device.

Environmental

There are different precautions to take within each installation situation. Specific precautions are listed in the installation section for that situation.

Site Location

The NodeB Rack Mount basestation is designed to be installed in restricted access locations only. The site locations are accessible by suitably trained service/installation personnel only.

Network Connections

The NodeB Rack Mount basestation is NOT suitable for direct connection to Public Switched Networks. This means that the Node B is NOT suitable for direct connection to TNV circuits.

4. Overview

Node B is the European Technical Standards Institute's (ETSI) name for the radio base station. The basic function of the Node B is to convert 100 Base T packet data into the UTRAN TD-CDMA air interface used between the Node B and the 3G Modem. The Node B can be configured to operate in configurations ranging from a single sector or omni mode, up to a 6 sector arrangement. One Node B is required for each sector of coverage, in the case of an omni configuration one Node B will be required. The Node B is controlled by an INC (Integrated network Controller) generally co-located at the site possibly in a separate cabinet.

The Node B supports both 768 mega chips (10MHz) and 385 mega chips (5MHz) without any hardware modification.

Scope

This document covers the physical installation and mounting of the Node B Rack Mount in a rack installation. It contains the specific mounting requirements for installing within a rack ut does not contain specifications for the rack.

Where the Node B Rack Mount is required to be installed in an outdoor configuration, the specific requirements for the outdoor enclosure are listed.

The manual does not detail custom or specialised installations or applications.

Additionally, antenna rigging/mounting, lightning protection, tower work, feeder installation / termination are all considered to be outside the scope of this document.

If in any doubt about the suitability of this document to successfully install at the proposed location, then please consult IPWireless technical support for assistance.

5. General Specifications

Table 5-1 : Specifications

Unit	***Specification***
Rack Specifications	*19inch Mounting Racks with support shelves* *Front Securing*
Measurements	*Digital Shelf: 134 H x 483 W x 600 D mm* *RF Shelf: 134 H x 483 W x 600 D mm*
Measurements with front handles & cable	*Digital Shelf: 134 H x 483 W x 650 D mm* *RF Shelf: 134 H x 483 W x 650 D mm*
Node B Weight	*Digital Shelf: 12Kgs / 22 lbs* *RF Shelf: ≤20kgs / 33 lbs*
Power Consumption	*Digial Shelf: 80 Watts max (2Amp Fused)* *RF Shelf: 150 Watts max +34dBm – non-TxD (4Amp Fused)* *RF Shelf: 310 Watts max +37dBm – non-TxD (7Amp Fused)* *RF Shelf: 310 Watts max +34dBm – TxD (7Amp Fused)* *RF Shelf: 600 Watts max +37dBm – TxD (12.5Amp Fused)* ***Note**: Fuse Size: (¼ x 1 ¼ inch) / (6.3 x 32 mm)*
Input Power Nominal	*-48 V DC*
Input Range	*-36V to -70V DC*
Ambient Operational Environment	*-5ºC to +45ºC* *0 to 95% Relative Humidity- Non-condensing* *IP20 – IEC529* *No water or Ice precipitation*
Cooling	*Forced Convection – Fan Assisted* *Intact front – Exhaust rear*
Operating Frequencies *MMDS*	*2500 MHz – 2700 MHz*
UMTS	*1900MHz – 2100MHz*
	3400MHz – 3600MHz
Connections - External	*Antenna – DIN 7/16 Female* *GPS – N-type Female* *Power Circular Connectors – cables provided* *Ethernet – RJ45* *E1/T1 – RJ45* *E3/T3 – BNC* *Alarm – 15wayD & 9wayD* *Earthing – M8 Stud*

Figure 5-1 : Node B Rack Mount – Digital Shelf Physical Dimensions

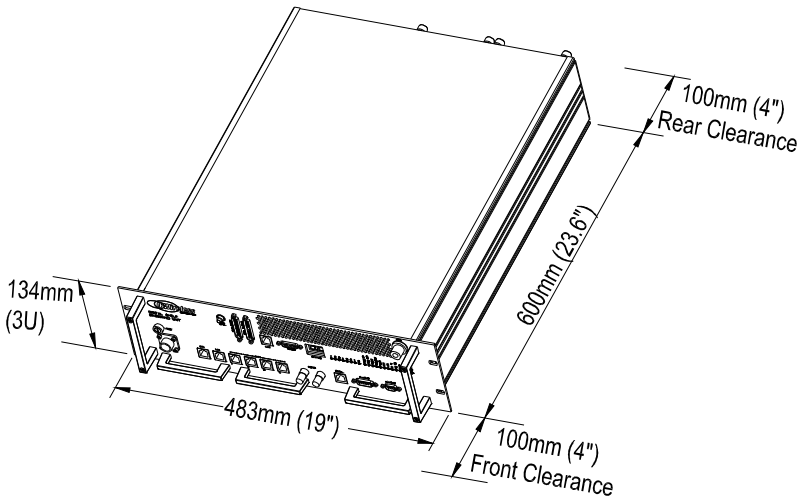

Figure 5-2 : Node B Rack Mount – RF Shelf Physical Dimensions

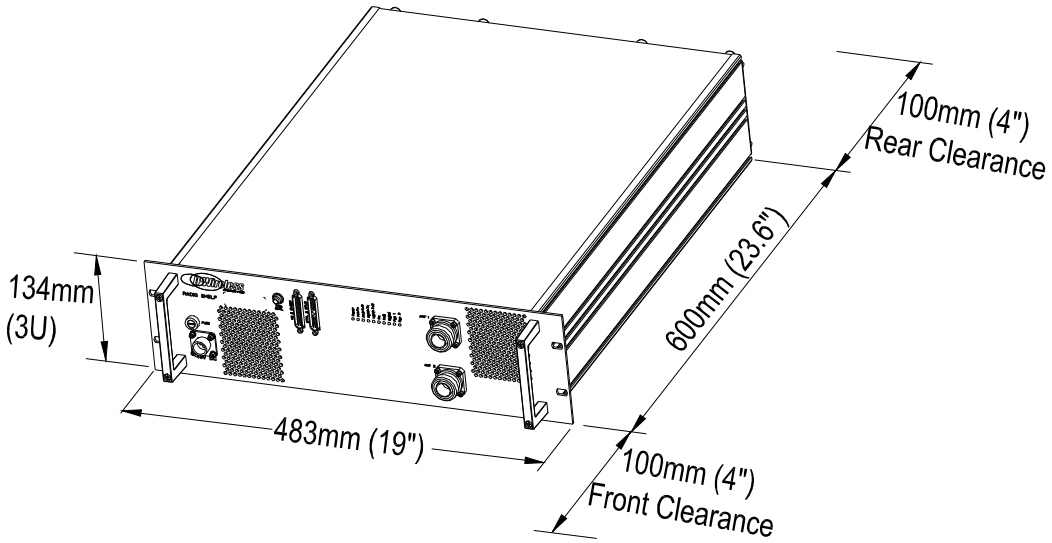

Table 5-2 : Node B Model Types

	TxD +34dBm	TxD +37dBm	Non-TxD +34dBm	Non-TxD +37dBm
Node B Frequency	**Model No**	**Model No**		
1900-1905 MHz	N/A	N/A	N/A	N/A
1905-1910 MHz	N/A	N/A	N/A	N/A
1910-1915 MHz	N/A	N/A	N/A	N/A
1915-1920 MHz	N/A	N/A	N/A	N/A
2053-2082 MHz	N/A	N/A	N/A	N/A
2010-2015 MHz	N/A	N/A	N/A	N/A
2500-2686 MHz	EV	N/A	N/A	ET
3480-3580 MHz	N/A	LB	N/A	N/A

Figure 5-3 : General Description – Front View

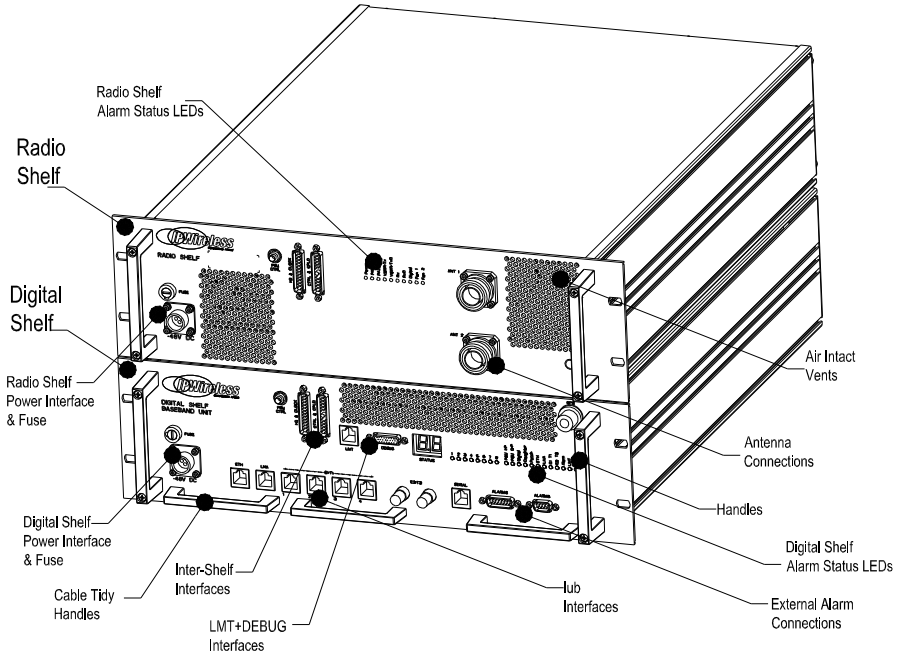

The Digital shelf has the following interfaces on the front

- Mains DC supply
- Shelf interfaces to RF Shelf
- IUB Interfaces – Ethernet, E1, T1, E3 or T3
- Alarm Interfaces – input & output
- Status - 7 Segment Display
- Status – LEDs
- LMT & Debug ports

On the rear the earth point and access to the fans.

Figure 5-4 : Digital Shelf Faceplate

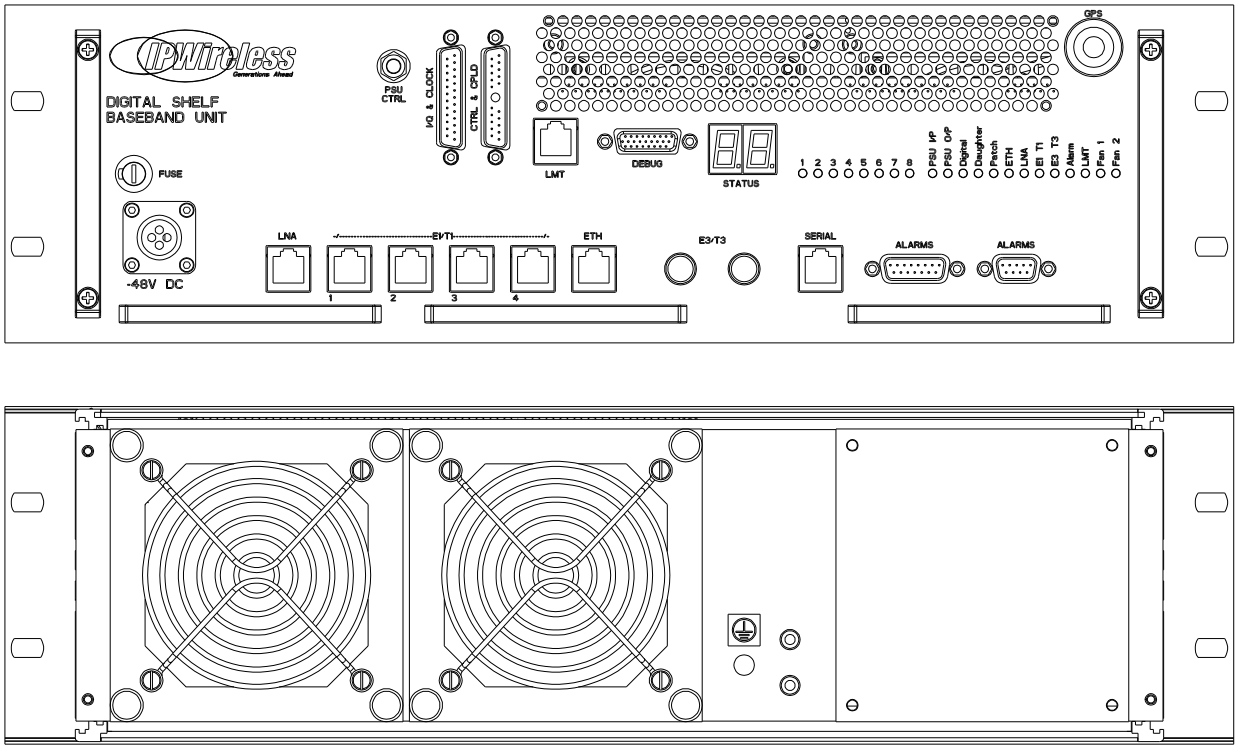

The Radio shelf has the following interfaces.

- Mains DC supply
- Shelf interfaces to RF Shelf
- Antenna Ports
- Status – LEDs

On the rear the earth point and access to the fans.

Figure 5-5 : Radio Shelf Faceplate

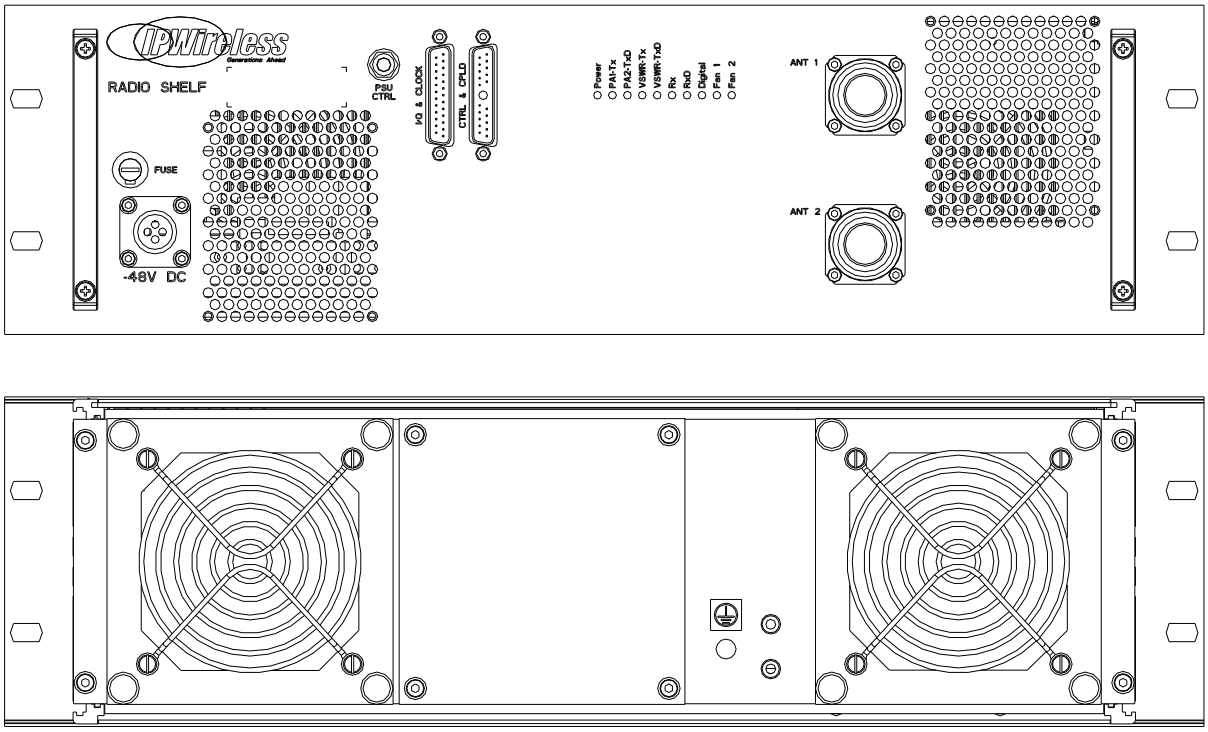

6. Installation

This section describes the steps to be followed to physically install the Node B.

Step 1 Pre-Installation

The following are the initial checks that should be carried out to ensure that preparation for the installation is complete.

For Installation Check Card please see Appendix A at the back of this manual.

1. Review site construction drawings to determine if site was constructed according to the drawings.
2. Review drawings and actual installation to determine location of Node B installation.
3. Check availability of electrical, grounding and antenna connections.
4. Complete site survey.
5. Check structural strength of mounting rack or frame including shelves/rails to support Node B total weight of 25Kgs (55lbs) or multiples if a multi-sector installation.

Step 2 Parts Shipped & Tools Required

This section reviews the parts, ancillary materials and tools required to install the Node B.

Use this checklist (Table 6-1) to check quantity and quality of parts as they are unpacked: -

The Node B unit is packaged with the following items, the packing list on the inside top of the packing shall list these items.

The crate Figure 5-1 contains two cartons the top/first carton is the digital or baseband shelf, the bottom is the RF or radio shelf. The carton is packed to facilitate the intended sequence of installation. The figure below shows the sequence of removal from the packing.

Table 6-1 : Packing List

#	Description	Qty
	Digital Shelf Package - contents	
1	Node B Digital/Baseband Shelf Unit	1
2	GPS Antenna Kit incl Mounting contains: 1 x gps antenna 1 x gps antenna mounting	1
3	Alarm Connector Kit contains: 1 x 15wayD conn+backshell 1 x 9wayD conn+backshell	1
4	Shelf Interface Kit contains 1 x Baseband cable – 21wayD-hybrid 1 x Control Cable – 25wayD 1 x PSU control cable – 3way	1
5	Power Connection Kit-Digital contains 1 x power connection – digital	
6	Earth Fixing Kit contains: 1 x M8 Nut 1 x M8 Spring Washer 2 x M8 Plain Washer	
	Radio Shelf Package	
1	Radio Shelf Unit	1
2	Power Connection Kit-Radio contains 1 x power connection – radio	1
3	Earth Fixing Kit contains: 1 x M8 Nut 1 x M8 Spring Washer 2 x M8 Plain Washer	1

Figure 6-1 : Sales Pack Crate – Digital & Radio Shelf Packages

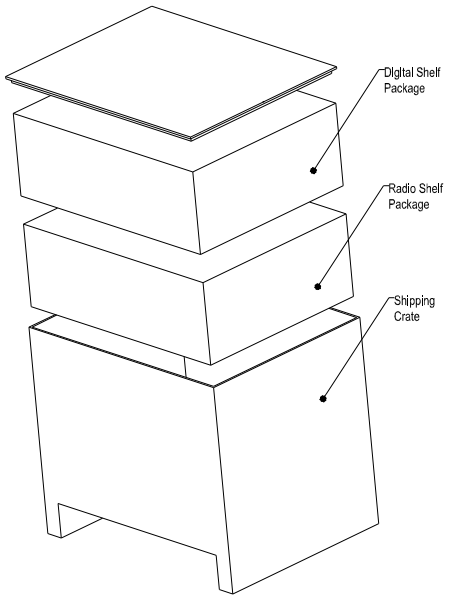

Figure 6-2 : Digital Shelf Package + Contents

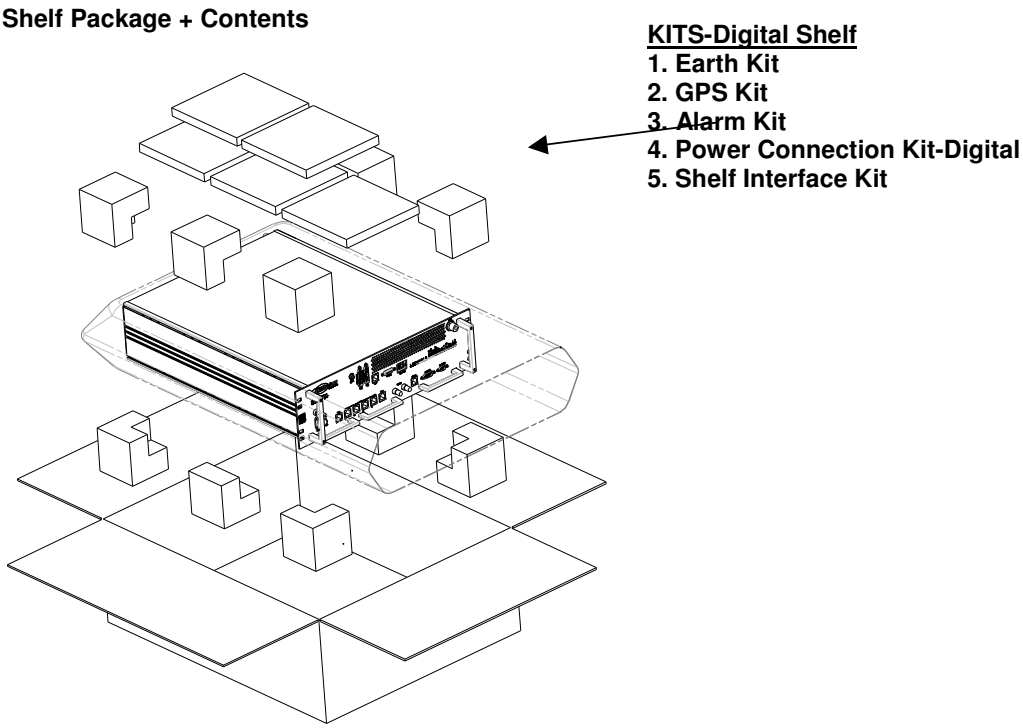

Figure 6-3 : Radio Shelf Package + Contents

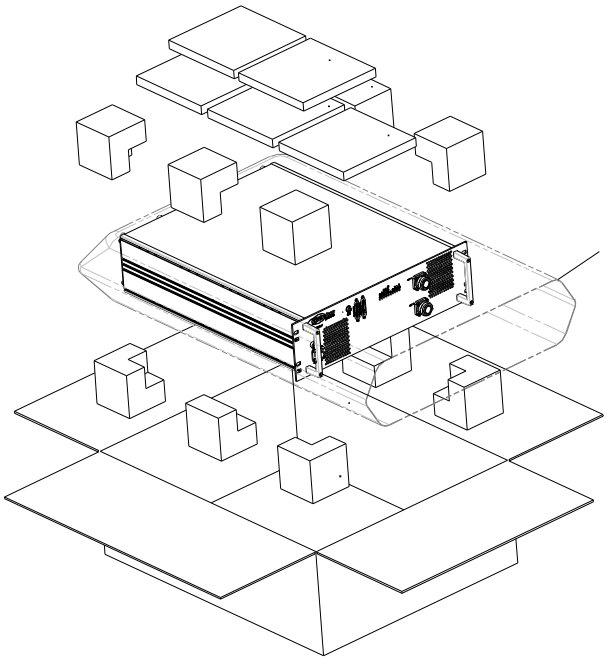

<u>KITS-Radio Shelf</u>
1. Earth Kit
2. Power Connection Kit-Radio

In addition to standard construction equipment, the following tools and materials should be available prior to installation:

Table 6-2 : Tools Required

Tools	Description
Basic telecommunications tool kit	Includes screwdriver, socket wrenches, etc.
Voltmeter	Fluke meter
Cable Stripper & Crimper	RJ 45 crimper connector
Ethernet cable test set	Test for all Ethernet cables
Compass or Handheld GPS with signal indicator	Test for GPS signal at site location

Table 6-3 : Materials Required

Material	Description
CAT5 - 4 pair, double screened cable, recommended Alcatel LANmark-5 F^2TP or equivalent	IUB / LMT / T1 / E1 Cable
RJ45 Connectors	IUB / LMT / T1 / E1 Connections
CAT5 - 4 pair, double screened cable, recommended Alcatel LANmark-5 F^2TP or equivalent	Alarm distribution cable
10 mm^2 maximum Ground cable	Grounding termination
M8 ring terminal	Grounding termination
BNC Right Angle Connectors	Connectors for E3/T3 Connections
RG59 B/U-LSF and UV stabilised or equivalent	Cable for E3/T3 Connections
Rack mounting 8 off Cage nuts + Screws – note these are required to secure the shelves to the rack	typically M6 Thread screws, washers & rack cage nuts
Rack/Cabinet or Enclosure	Installation and/or site specific
Shelf Supports or rails	Specific to rack/cabinet or enclosure
DIN 7/16 antenna connections	Connectors specific to antenna cable chosen
Antenna Cable	Site specific selection

Step 3 Site Preparations for Node B Installation

The section specifies the facilities that need to be available at the site prior to installation. The table below is a site checklist that should be completed prior to installation.

It is assumed that the site has already been selected from RF network planning and that site acquisition or permission has been granted.

Table 6-4 : Site Preparation Checklist

#	Facility	Complete Yes/No
1	Mains power supply –48Vdc	
2	Availability of suitable Ethernet, E1, T1, E3 or T3 Interfaces	
3	connections and trunking/conduits for interfaces	
4	Suitable earth	
5	Rack or cabinet suitable to mount the NodeB	
6	Clearance around the NodeB for cable entry and cooling - see figure below	

Assumptions

It is assumed that prior to Node B installation all civil, electrical distribution, structured cabling termination work has been completed.

Additionally, all antenna rigging, feeder runs and terminations, associated lightning protection and earthing, has been done, with certification for safety / compliance issued as required by local regulations.

It is also strongly recommended that all VSWR plots of the feeder / antenna installations should be available for inspection.

Positioning the Node B with a rack or cabinet

- The digital and RF shelves of the rack mount may be mounted on a single shelf/shelf support as a pair (**Figure 6-4**) or can be mounted into the rack on separate shelves or shelf supports (**Figure 6-5**).
- The RF shelf needs to be on the top with the digital shelf beneath. The maximum vertical distance between the shelves shall be not more than 1U (44mm or 1 ¾”).
- Selection of a suitable position for the Node B shall be done by surveying possible sites with regard to the availability of facilities i.e. power, relative position to the INC and consulting the site plans.
- The Node B directly connected to the INC should be sited not more than 100m from the INC using Shielded Category 5 Ethernet cable as specified.
- Care should be taken to position the Node B for easy front and rear access.
- The Node B will need to be connected near the feeder terminations and earthing points as provided on site.
- Where the Node B is installed using a microwave link ensure that the microwave link can support the Ethernet requirements for the IUB interface i.e. 10 or 100 Mbps / full / half duplex as the Node B and INC may need to be configured manually in order to support this configuration.

Figure 6-4 : Node B Rack Mount – Single Support Shelf (all cables shown)

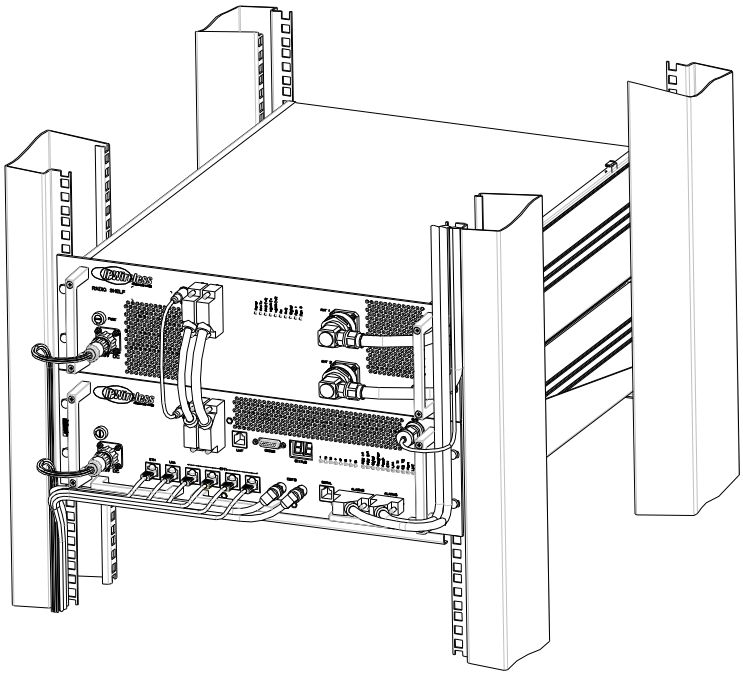

Figure 6-5 : Node B Rack Mount – Double Support Shelf (all cables shown)

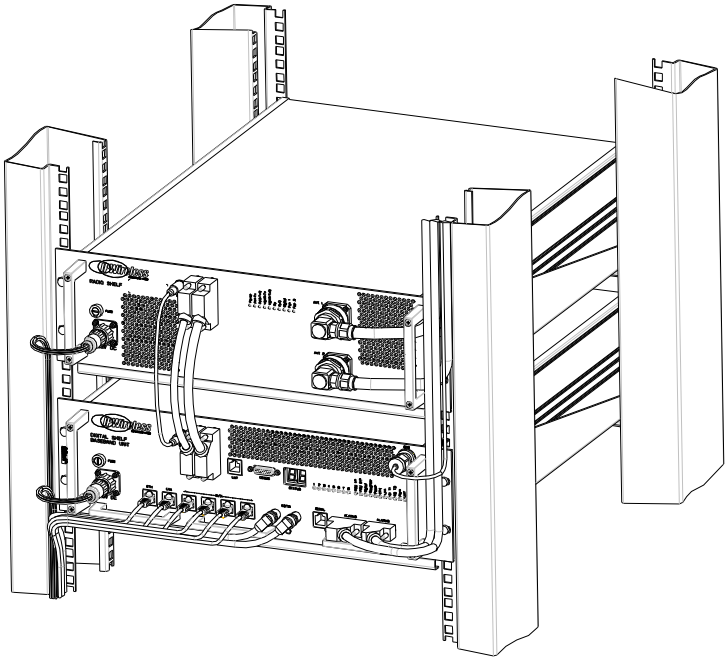

General Considerations

The following consideration and checks are applicable to all mounting types :-

- The NodeB rack mount is designed for indoor use only refer to Table 5-1.
- Review the GPS installation guidelines (step 12) to ensure that the location will allow proper operation of the Node B GPS remote antenna. i.e. a Southern Exposure is required for outside installations (Northern Hemisphere), a GPS repeater may be necessary in areas where the active GPS antenna cannot reach.
- There should be a minimum clearance of 100mm in front and behind the Node B rack mount (Figure 5-1 & Figure 5-2) for cable routing, air intake/exhaust and access to fans at the rear.
- Ensure that the rack or cabinet is sufficiently strong to support the Node B or multiples.
- The Node B requires un-restricted airflow front for air inlet to the rear for air exhaust.