Node B V4 Rack Mount

Installation Guide

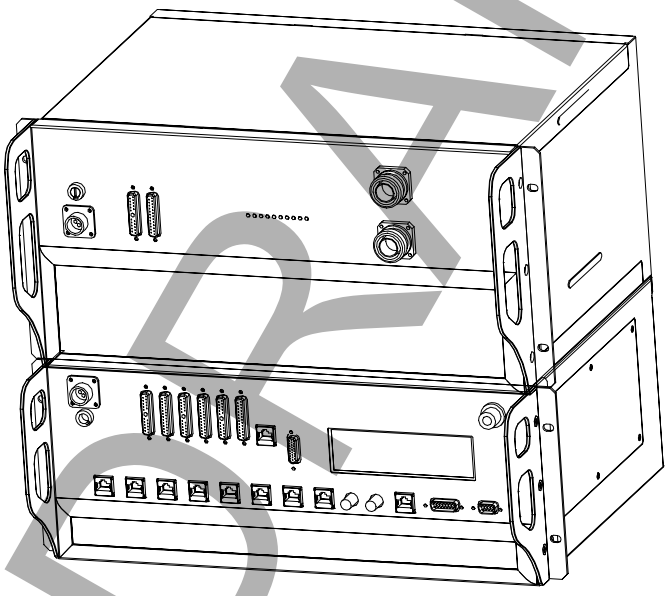

DRAFT

DRAFT

Information in this document and the products described are subject to change without notice.

©2000-2004 IPWireless, Inc. All rights reserved.

Reproduction, alteration, or distribution in any manner whatsover without the written permission of IPWireless Inc, is strictly forbidden.

Trademarks used in this text: the IPWireless logo, icon and IPWireless Broadband Modem are trademarks of IPWireless, Inc.; Microsoft, Windows, and Windows NT are registered trademarks of Microsoft Corporation.

Other trademarks and trade names may be used in this document to refer to either the entities claiming the marks and names or their products, IPWireless, Inc., disclaims any proprietary interest in trademarks and trade names other than its own.

July 2004 **Part No. IPW-0879**

Table of Contents

1. Release Version 5
2. Safety Precautions 6
3. General Warnings 6
4. Overview 7
5. General Specifications 8
6. Installation 13
Step 1 Pre-Installation 13
Step 2 Parts Shipped & Tools Required 14
Step 3 Site Preparations for Node B Installation 18
Step 4 Mounting Installations 21
Step 5 Ground Installation 23
Step 5 Ground Installation 24
Step 6 DC Power Connection-Digital 25
Step 7 DC Power Connection-Radio 26
Step 8 Inter-Shelf Connections 27
Figure 6-13: Interface Cable Connection – V4B & V4C 28
Step 9 Backhaul Connections (Iub) to INC 29
Step 9 Backhaul Connections (Iub) to INC 29
Step 10 Antenna Cabling - Installation 32
Step 11 Alarm Connections 33
Step 12 GPS Installation & Operation 35
Step 13 TTLNA Interfaces 37
7. APPENDIX 38
Appendix A - Installation Check Card 38
Appendix B – Outdoor Cabinet Specification Requirements 39
Appendix C – Glossary 40

DRAFT

Table of Tables

Table 2-1 : Safety Sumbols 6
Table 5-1 : Specifications 8
Table 5-2 : Node B Model Types 10
Table 6-1 : Digital Shelf - Packing List 14
Table 6-2 : Radio Shelf - Packing List 15
Table 6-3 : Tools Required 17
Table 6-4 : Materials Required 17
Table 6-5 : Site Preparation Checklist 18
Table 6-6 : Ethernet Pin-outs using RJ45 30
Table 6-7 : T1/E1 Pin-outs 31
Table 6-8 : Alarm Inputs 34
Table 6-9 : Alarm Outputs 34

Table of Figures

Figure 5-1 : Node B Rack Mount – Digital Shelf Physical Dimensions 8
Figure 5-2 : Node B Rack Mount – RF Shelf Physical Dimensions 9
Figure 5-3 : General Description – Front View 10
Figure 5-4 : Digital Shelf Faceplate 11
Figure 5-5 : Radio Shelf Faceplate 12
Figure 6-1 : Sales Pack Crate – Digital & Radio Shelf Packages 15
Figure 6-2 : Digital Shelf Package + Contents 16
Figure 6-3 : Radio Shelf Package + Contents 16
Figure 6-4 : Node B Rack Mount – Single Support Shelf (all cables shown) 19
Figure 6-5 : Node B Rack Mount – Double Support Shelf (all cables shown) 19
Figure 6-6 : Mounting Rack + Support Shelves/Rails 21
Figure 6-7: Installing Digital Shelf 22
Figure 6-8 : Installing Radio Shelf 23
Figure 6-9 : Earth Connection on the rear of each shelf 24
Figure 6-10 : Power Connection to the digital shelf 25
Figure 6-11 : Power Connection to the radio shelf 26
Figure 6-12: Interface Cable Connection – V4A 27
Figure 6-13: Interface Cable Connection – V4B & V4C 28
Figure 6-14 : Backhaul Connections 29
Figure 6-15 : Ethernet Pin-outs using RJ45 30
Figure 6-16 : Antenna Connections & Routing 32
Figure 6-17 : Alarm Outputs & Inputs 33
Figure 6-18 : GPS Antenna 35
Figure 6-19 : GPS Antenna Connection 36
Figure 6-20 : TTLNA Connections 37

DRAFT

1. Release Version

Date	Version	Author	Reason For Change Issue
27th August 2004	0.0.0	L. Mujegu	Draft

DRAFT

2. Safety Precautions

Table 2-1 : Safety Sumbols

GENERAL WARNING	ELECTRICAL HAZARD	GROUND
GENERAL SAFETY PRECAUTION	**VOLTAGE:** Care should be taken when servicing this area. Misuse or inappropriate contact with these areas could result in physical harm and property damage	**GROUND:** Site for grounding equipment

These cautionary signs are used on the equipment and within this manual. For safety of personnel and protection of equipment observe these precautions when installing, operating or servicing the equipment and surrounding areas.

3. General Warnings

Electrical

Power Supply – the power cords supplied are for DC. DO NOT adapt to a different configuration.
Power supply circuits may carry high voltages. Remove rings, watches, and other jewellery before working with this type of equipment.

Batteries – Certain installation of this equipment require working with lead acid batteries, batteries present chemical, electric and gaseous hazards. Batteries are not supplied by IPWireless for the Node B equipment although UPS systems may be coupled with the Node B equipment in order to provide back up power in case of power outages.

Physical

Weight – The RF or Digital shelves of the Rack Node B can weigh up to 20kgs (44 pounds) each depending on configurations. Precautions should be taken, depending on the installation site conditions, in lifting and general handling the device.

Environmental

There are different precautions to take within each installation situation. Specific precautions are listed in the installation section for that situation.

Site Location

The Node B Rack Mount basestation is designed to be installed in restricted access locations only. The site locations are accessible by suitably trained service/installation personnel only.

Network Connections

The Node B Rack Mount basestation is NOT suitable for direct connection to Public Switched Networks. This means that the Node B is NOT suitable for direct connection to TNV circuits.

DRAFT

4. Overview

Node B is the European Technical Standards Institute's (ETSI) name for the radio base station. The basic function of the Node B is to convert 100 Base T packet data into the UTRAN TD-CDMA air interface used between the Node B and the 3G Modem. The Node B can be configured to operate in configurations ranging from a single sector or omni mode, up to a 6 sector arrangement. One Node B is required for each sector of coverage, in the case of an omni configuration one Node B will be required. The Node B is controlled by an INC (Integrated network Controller) generally co-located at the site possibly in a separate cabinet.

The Node B supports both 768 mega chips (10MHz) and 385 mega chips (5MHz) without hardware modification.

Scope

This document covers the physical installation and mounting of the Node B Rack Mount in a rack installation. It contains the specific mounting requirements for installing within a rack, specifications for the rack are outside the scope of this guide.

Where the Node B Rack Mount is required to be installed in an outdoor configuration, the specific requirements for the outdoor enclosure are listed in appendix B.

The manual does not detail custom or specialised installations or applications.

Additionally, antenna rigging/mounting, lightning protection, tower work, feeder installation / termination are all considered to be outside the scope of this guide.

If in any doubt about the suitability of this guide to successfully install at the proposed location, then please consult IPWireless technical support for assistance.

DRAFT

5. General Specifications

Table 5-1 : Specifications

Unit	***Specification***
Rack Specifications	*19inch Mounting Racks with support shelves* *Front Securing*
Measurements	*Digital Shelf: 178 H / (4U) x 483 W x 300 D mm* *RF Shelf: 222 H/(5U) x 483 W x 300 D mm*
Measurements with front handles & cable	*Digital Shelf: 178 H / (4U) x 483 W x 450 D mm* *RF Shelf: 222 H/(5U) x 483 W x 450 D mm*
Node B Weight	*Digital Shelf: 13Kgs / 28 lbs* *RF Shelf: ≤21kgs / 44 lbs*
Power Consumption	*Digial Shelf: 80 Watts max (2Amp Fused)* *RF Shelf: 150 Watts max +34dBm – non-TxD (4Amp Fused)* *RF Shelf: 310 Watts max +37dBm – non-TxD (7Amp Fused)* *RF Shelf: 310 Watts max +34dBm – TxD (7Amp Fused)* *RF Shelf: 600 Watts max +37dBm – TxD (12.5Amp Fused)* ***Note**: Fuse Size: (¼ x 1 ¼ inch) / (6.3 x 32 mm)*
Input Power Nominal	*-48 V DC*
Input Range	*-36V to -70V DC*
Ambient Operational Environment	*-5ºC to +55ºC* *0 to 95% Relative Humidity- Non-condensing* *IP20 – IEC529* *No water or Ice precipitation*
Cooling	*Forced Convection – Fan Assisted* *Intact front – Exhaust rear*
Operating Frequencies *MMDS*	*2500 MHz – 2700 MHz*
UMTS	*1900MHz – 2100MHz*
	3400MHz – 3600MHz
Connections - External	*Antenna – DIN 7/16 Female* *GPS – N-type Female* *Power Circular Connectors – cables provided* *Ethernet – RJ45* *E1/T1 – RJ45* *E3/T3 – BNC* *Alarm – 15wayD & 9wayD* *Earthing – M8 Bolt hole @ rear of each shelf*

Figure 5-1 : Node B Rack Mount – Digital Shelf Physical Dimensions

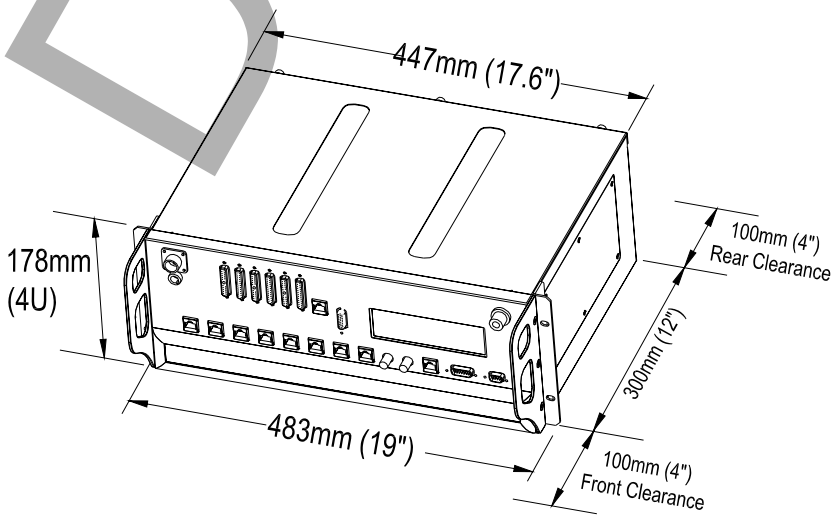

DRAFT

Figure 5-2 : Node B Rack Mount – RF Shelf Physical Dimensions

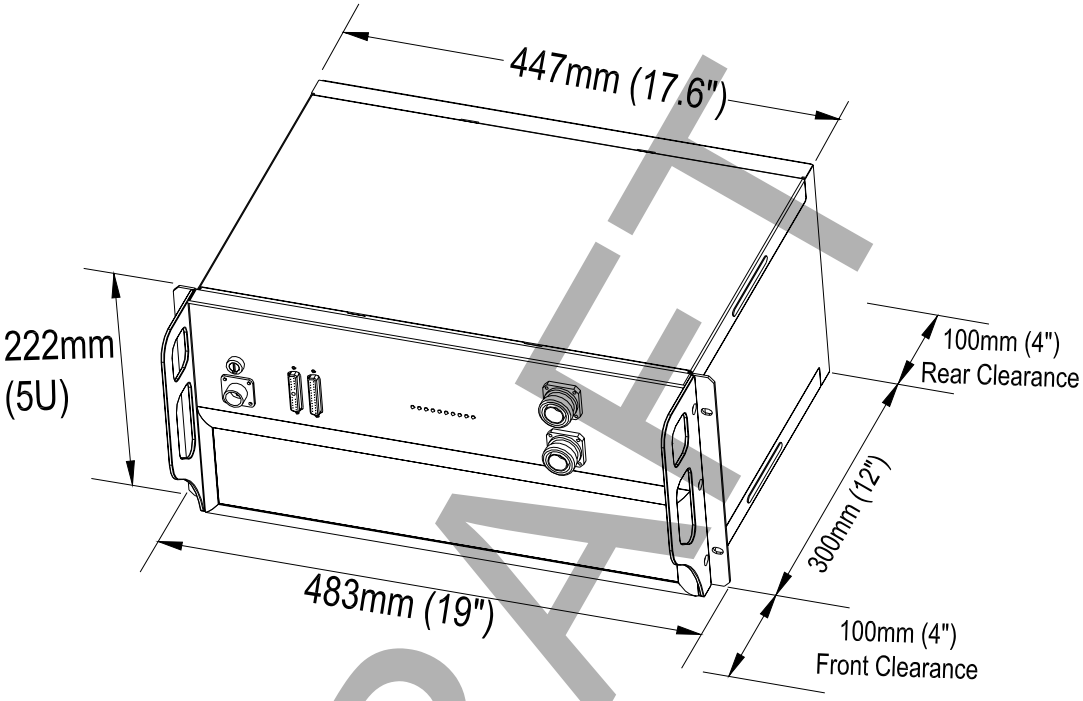

DRAFT

Table 5-2 : Node B Model Types

	TxD +34dBm	TxD +37dBm	Non-TxD +34dBm	Non-TxD +37dBm
Node B Frequency				
1900-1905 MHz		√		
1905-1910 MHz		√		
1910-1915 MHz		√		
1915-1920 MHz		√		
2053-2082 MHz		√		
2010-2015 MHz		√		
2500-2686 MHz		√		
3480-3580 MHz		√		

Figure 5-3 : General Description – Front View

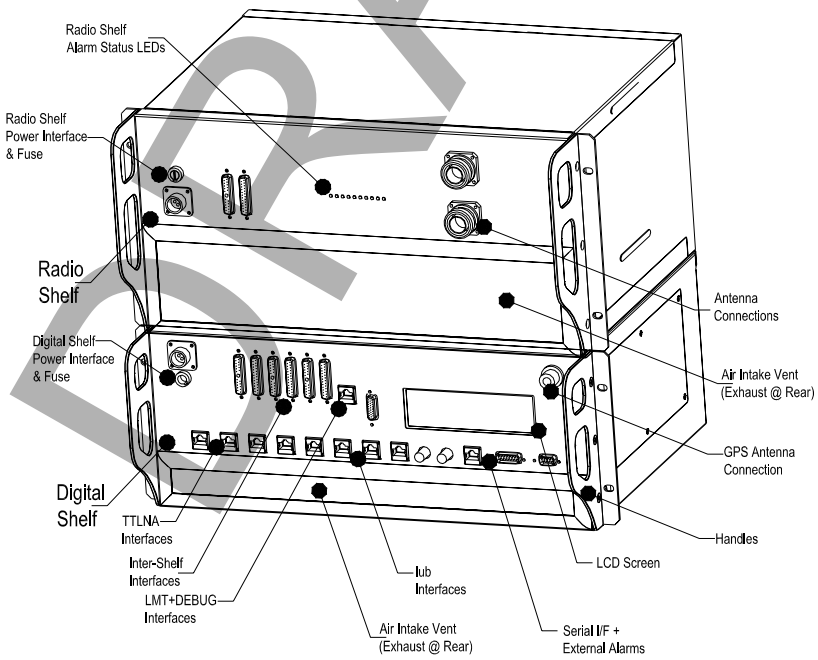

DRAFT

The Digital shelf has the following interfaces on the front

- Mains DC supply
- Shelf interfaces to RF Shelf(s)
- IUB Interfaces – Ethernet, E1, T1, E3 / T3
- Alarm Interfaces – input & output
- LCD Display – Touch Sensitive
- LMT & Debug ports

On the rear the earth point and access to the fans.

Figure 5-4 : Digital Shelf Faceplate

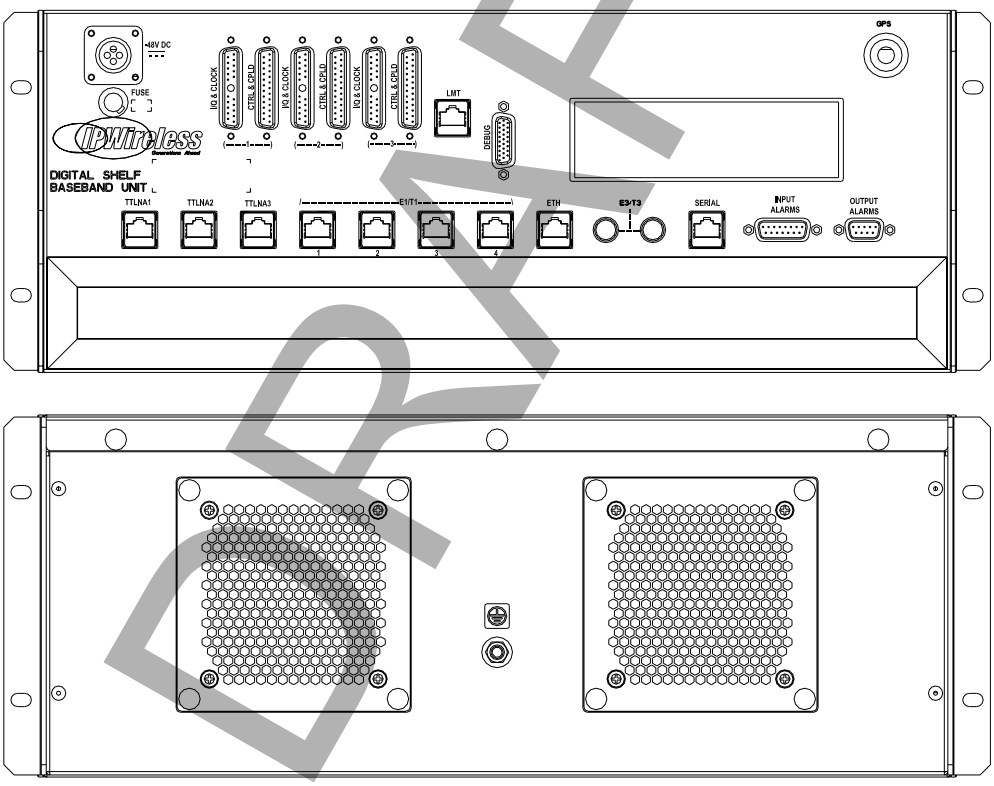

DRAFT

The Radio shelf has the following interfaces.

- Mains DC supply
- Shelf interfaces to Digital Shelf
- Antenna Ports
- Status – LEDs

On the rear the earth point and access to the fans.

Figure 5-5 : Radio Shelf Faceplate

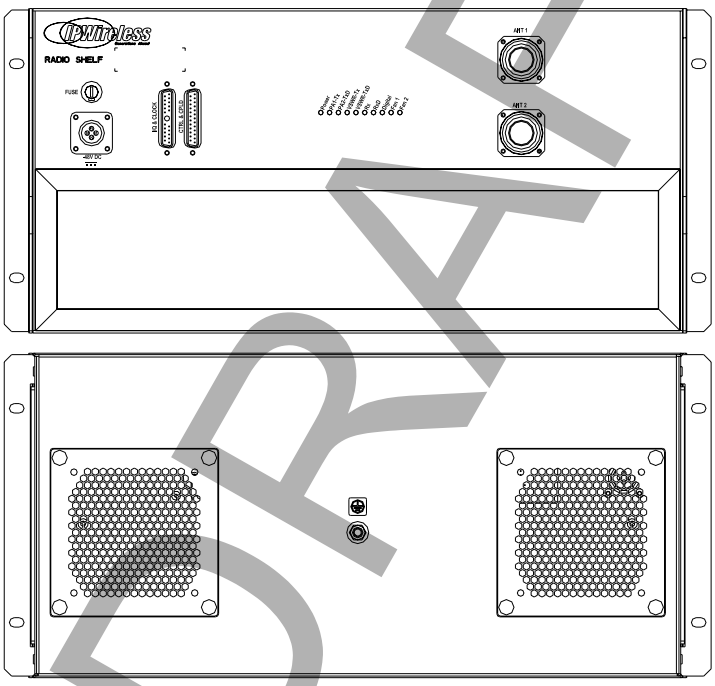

DRAFT

6. Installation

This section describes the steps to be followed to physically install the Node B.

The Rack Mount installation has 2 basic physical configurations V4A or V4B/V4C Installation. Note while there is different functionality between V4B and C the physical configuration is the same.

This section shall describe both configurations.

Step 1 Pre-Installation

The following are the initial checks that should be carried out to ensure that preparation for the installation is complete.

For Installation Check Card please see Appendix A at the back of this manual.

1. Review site construction drawings to determine if site was constructed according to the drawings.
2. Review drawings and actual installation to determine location of Node B installation.
3. Check availability of electrical, grounding and antenna connections.
4. Complete site survey.
5. Check structural strength of mounting rack or frame including shelves/rails to support Node B total weight of 35kgs (77lbs) or multiples if a multi-sector installation.

DRAFT

Step 2 Parts Shipped & Tools Required

This section reviews the parts, ancillary materials and tools required to install the Node B.

Use this checklist (Table 6-1) to check quantity and quality of parts as they are unpacked: -

The Node B unit is packaged with the following items, the packing list on the inside top of the packing shall list these items.

The crate **Figure 6-1**contains two cartons the top/first carton is the digital or baseband shelf, the bottom is the RF or radio shelf. The carton is packed to facilitate the intended sequence of installation. The figure below shows the sequence of removal from the packing.

Table 6-1 : Digital Shelf - Packing List

#	Description	Qty
	Digital Shelf Package - contents	
1	***Node B Digital/Baseband Shelf Unit***	1
2	***GPS Antenna Kit incl Mounting*** contains: 1 x gps antenna 1 x gps antenna mounting	1
3	***Alarm Connector Kit*** contains: 1 x 15wayD conn+backshell 1 x 9wayD conn+backshell	1
4.1	***Shelf Interface Kit – RF1 – V4A*** contains 1 x Baseband cable – 21wayD-hybrid 1 x Control Cable – 25wayD 1 x PSU control cable – 3way	1
4.2	***Shelf Interface Kit – RF2 – V4B & V4C*** contains 1 x Baseband cable – 21wayD-hybrid 1 x Control Cable – 25wayD 1 x PSU control cable – 3way	
4.3	***Shelf Interface Kit – RF3 – V4B & V4C*** contains 1 x Baseband cable – 21wayD-hybrid 1 x Control Cable – 25wayD 1 x PSU control cable – 3way	
5	***Power Connection Kit-Digital*** contains 1 x power connection – digital	
6	***Earth Fixing Kit*** contains: 1 x M8 Nut 1 x M8 Spring Washer 2 x M8 Plain Washer	

DRAFT

Table 6-2 : Radio Shelf - Packing List

#	Description	Qty
	Radio Shelf Package	
1	Radio Shelf Unit	1
2	Power Connection Kit-Radio contains 1 x power connection – radio	1
3	Earth Fixing Kit contains: 1 x M8 Nut 1 x M8 Spring Washer 2 x M8 Plain Washer	1

Figure 6-1 : Sales Pack Crate – Digital & Radio Shelf Packages

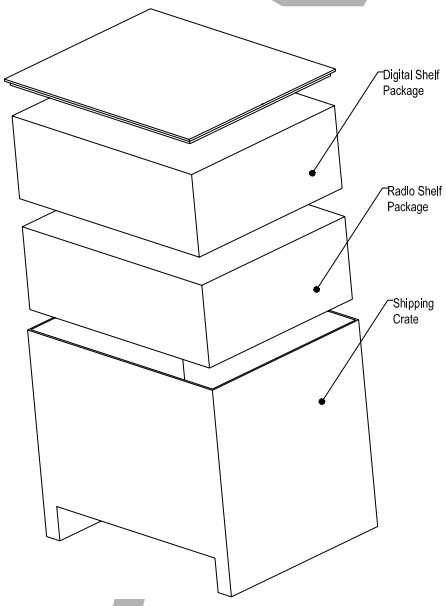

Figure 6-2 : Digital Shelf Package + Contents

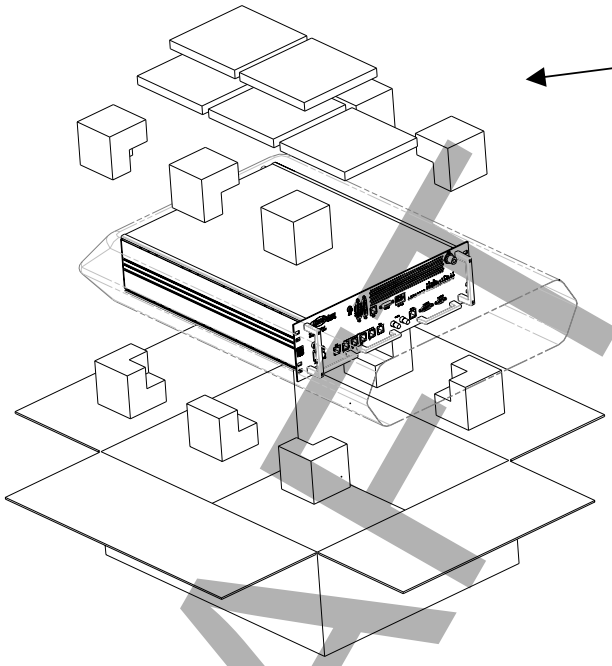

KITS-Digital Shelf
1. Earth Kit
2. GPS Kit
3. Alarm Kit
4. Power Connection Kit-Digital
5. Shelf Interface Kit(s)

Figure 6-3 : Radio Shelf Package + Contents

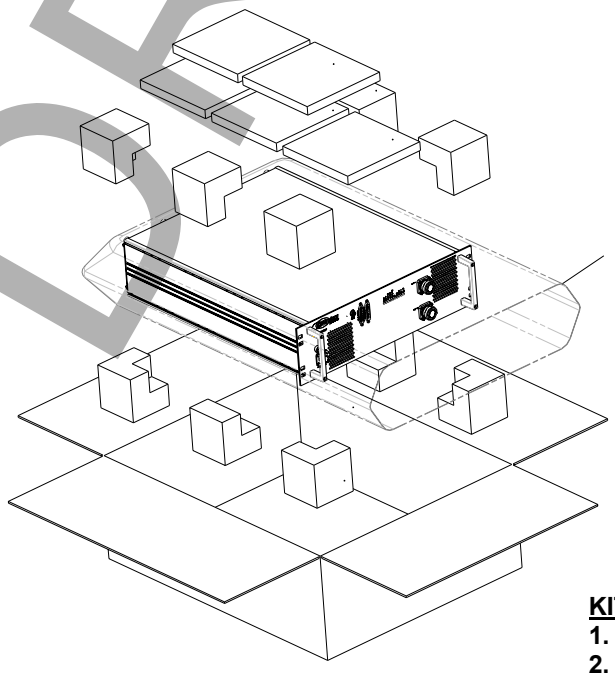

KITS-Radio Shelf
1. Earth Kit
2. Power Connection Kit-Radio

DRAFT

In addition to standard construction equipment, the following tools and materials should be available prior to installation:

Table 6-3 : Tools Required

Tools	Description
Basic telecommunications tool kit	Includes screwdriver, socket wrenches, etc.
Voltmeter	Fluke meter
Cable Stripper & Crimper	RJ 45 crimper connector
Ethernet cable test set	Test for all Ethernet cables
Compass or Handheld GPS with signal indicator	Test for GPS signal at site location

Table 6-4 : Materials Required

Material	Description
CAT5 - 4 pair, double screened cable, recommended Alcatel LANmark-5 F^2TP or equivalent	IUB / LMT / T1 / E1 Cable
RJ45 Connectors	IUB / LMT / T1 / E1 Connections
CAT5 - 4 pair, double screened cable, recommended Alcatel LANmark-5 F^2TP or equivalent	Alarm distribution cable
10 mm^2 maximum Ground cable	Grounding termination
M8 ring terminal	Grounding termination
BNC Right Angle Connectors	Connectors for E3/T3 Connections
RG59 B/U-LSF and UV stabilised or equivalent	Cable for E3/T3 Connections
Rack mounting 8 off Cage nuts + Screws – note these are required to secure the shelves to the rack	typically M6 Thread screws, washers & rack cage nuts
Rack/Cabinet or Enclosure	Installation and/or site specific
Shelf Supports or rails	Specific to rack/cabinet or enclosure
DIN 7/16 antenna connections	Connectors specific to antenna cable chosen
Antenna Cable	Site specific selection

DRAFT

Step 3 Site Preparations for Node B Installation

The section specifies the facilities that need to be available at the site prior to installation. The table below is a site checklist that should be completed prior to installation.

It is assumed that the site has already been selected from RF network planning and site acquisition/permission has been granted.

Table 6-5 : Site Preparation Checklist

#	Facility	Complete Yes/No
1	Mains power supply –48Vdc	
2	Availability of suitable Ethernet, E1, T1, E3 or T3 Interfaces	
3	connections and trunking/conduits for interfaces	
4	Suitable earth	
5	Rack or cabinet suitable to mount the NodeB	
6	Clearance around the NodeB for cable entry and cooling - see figure below	

Assumptions

It is assumed that prior to Node B installation all civil, electrical distribution, structured cabling termination work has been completed.

Additionally, all antenna rigging, feeder runs and terminations, associated lightning protection plus grounding is complete, with certification for safety / compliance issued as required by local regulations.

It is also strongly recommended that all VSWR plots of the feeder / antenna installations should be available for inspection.

Positioning the Node B with a rack or cabinet

- The digital and RF shelves of the rack mount may be mounted on a single shelf/shelf support as a pair (**Figure 6-4**) or can be mounted into the rack on separate shelves or shelf supports (**Figure 6-5**).
- The RF shelf needs to be on the top with the digital shelf beneath. The maximum vertical distance between the shelves shall be not more than 1U (44mm or 1 ¾”).
- Selection of a suitable position for the Node B shall be done by surveying possible sites with regard to the availability of facilities i.e. power, relative position to the INC and consulting the site plans.
- The Node B directly connected to the INC should be sited not more than 100m from the INC using Shielded Category 5 Ethernet cable as specified.
- Care should be taken to position the Node B for easy front and rear access.
- The Node B will need to be connected near the feeder terminations and earthing points provided on site.
- Where the Node B is installed using a microwave link ensure that the microwave link can support the Ethernet requirements for the IUB interface i.e. 10 or 100 Mbps / full / half duplex as the Node B and INC. If not the Node B and INC may need to be configured manually to support different configuration.

DRAFT

Figure 6-4 : Node B Rack Mount – Single Support Shelf (all cables shown)

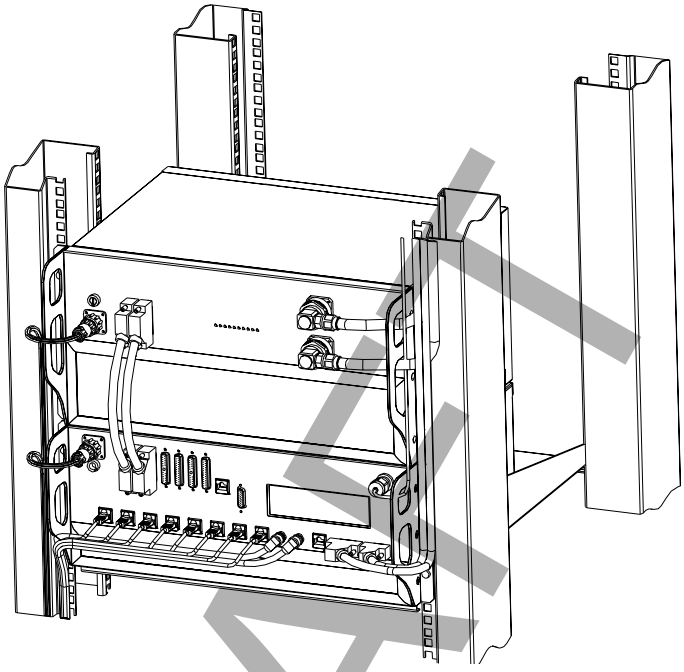

Figure 6-5 : Node B Rack Mount – Double Support Shelf (all cables shown)

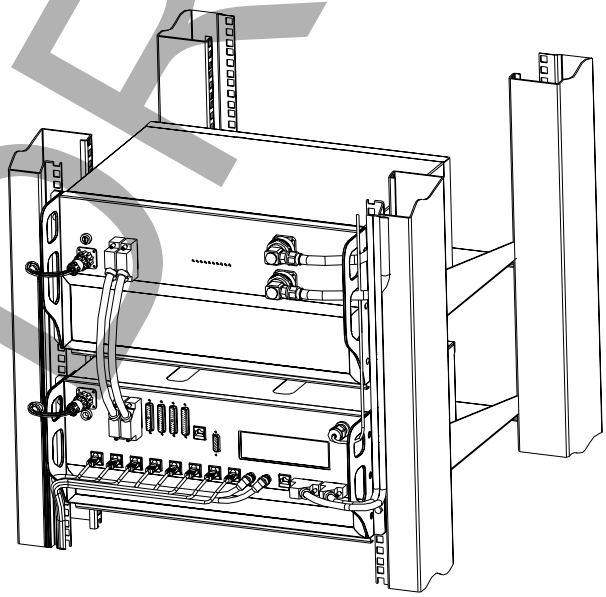

DRAFT

General Considerations

The following consideration and checks are applicable to all mounting types :-

- The NodeB rack mount is designed for indoor use only refer to Table 5-1.
- Review the GPS installation guidelines (step 12) to ensure that the location will allow proper operation of the Node B GPS remote antenna. i.e. a Southern Exposure is required for outside installations (Northern Hemisphere), a GPS repeater may be necessary in areas where the active GPS antenna cannot reach.
- There should be a minimum clearance of 100mm in front and behind the Node B rack mount (Figure 5-1 & Figure 5-2) for cable routing, air intake/exhaust and access to fans at the rear.
- Ensure that the rack or cabinet is sufficiently strong to support the Node B or multiples.
- The Node B requires un-restricted airflow front for air inlet to the rear for air exhaust (see figures 5-1 & 5-2).

DRAFT

Step 4 Mounting Installations

This section explains how to mount the Node B Rack Mount shelves into racks.

Mounting Rack

The figure below illustrates the 19inch mounting rack plus support shelves, some racks or cabinets can use support rails. This construction can be within an enclosure or cabinet.

The support shelves or rails are specific to the rack, enclosure or cabinet being installed, thus their specification shall be part of same selection.

Figure 6-6 : Mounting Rack + Support Shelves/Rails

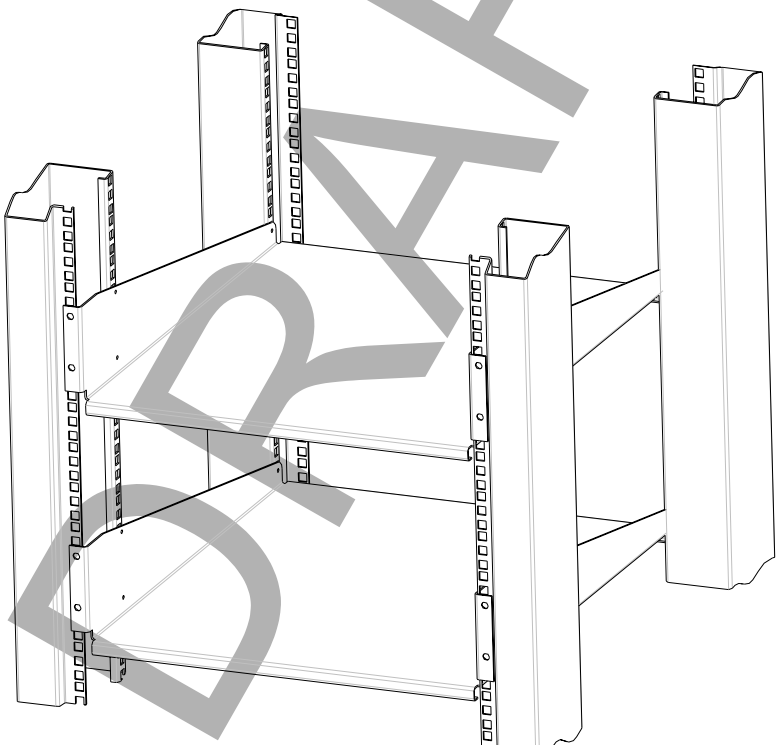

DRAFT

Precautions

The following precautions and checks are applicable to all mounting types:-

- Connectors have been manufactured to fit their specific cables and funcition. Do not modify or force connectors.
- Check Site Plans for engineering approval.
- Ensure that good ground resistance is available at the installation site (≤10Ω)
- Where installed in an outdoor enclosure attention should be paid to cooling and water+dust sealing prevention refer to Table 5-1.

Rack Mounting – Installing Digital Shelf

Ensure the shelf or shelf supports are secure, then insert the digital shelf into the rack and secure from the front.

Notes:

- If there is no rear access it may be required to make the ground connection prior to inserting the shelf into the rack.
- Where additional securing is required at the rear this shall require custom brackets depending on the rack specifications/construction.

Figure 6-7: Installing Digital Shelf

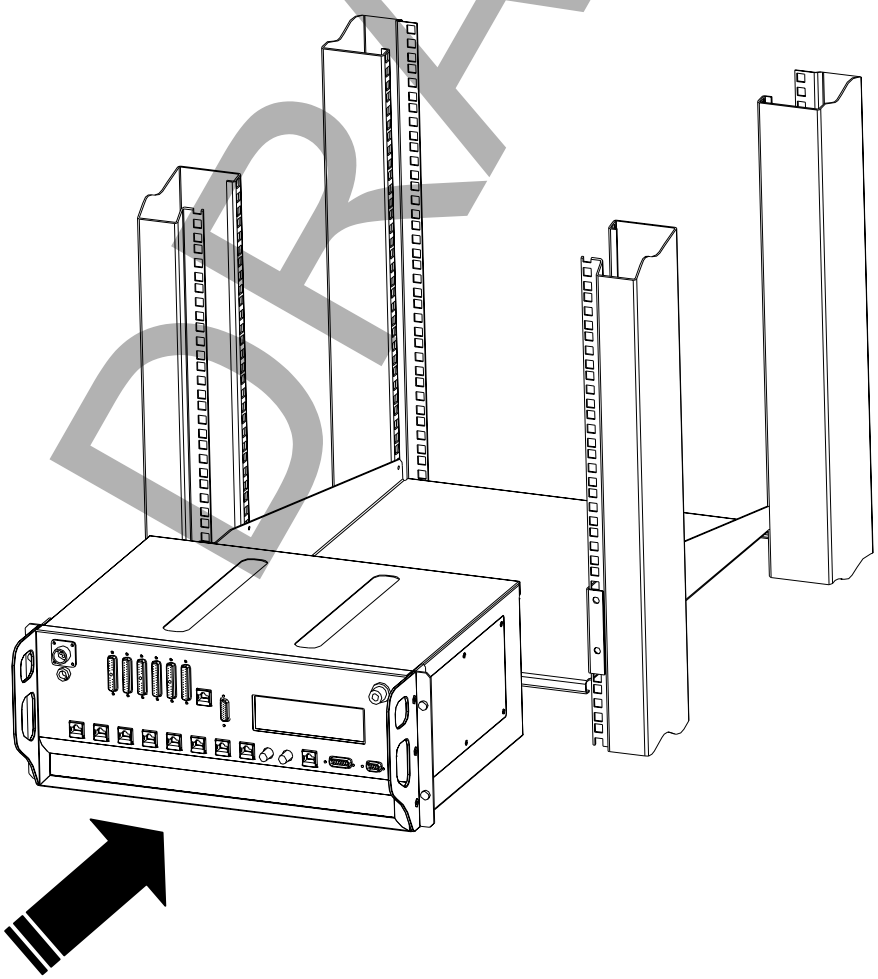

DRAFT

Rack Mounting – Installing Radio Shelf

Ensure the shelf or shelf supports are secure, then insert the radio shelf into the rack and secure from the front.

Notes:

- If there is no rear access it may be required to make the ground connection prior to inserting the shelf into the rack.
- Where additional securing is required at the rear this shall require custom brackets depending on the rack specifications/construction.

Figure 6-8 : Installing Radio Shelf

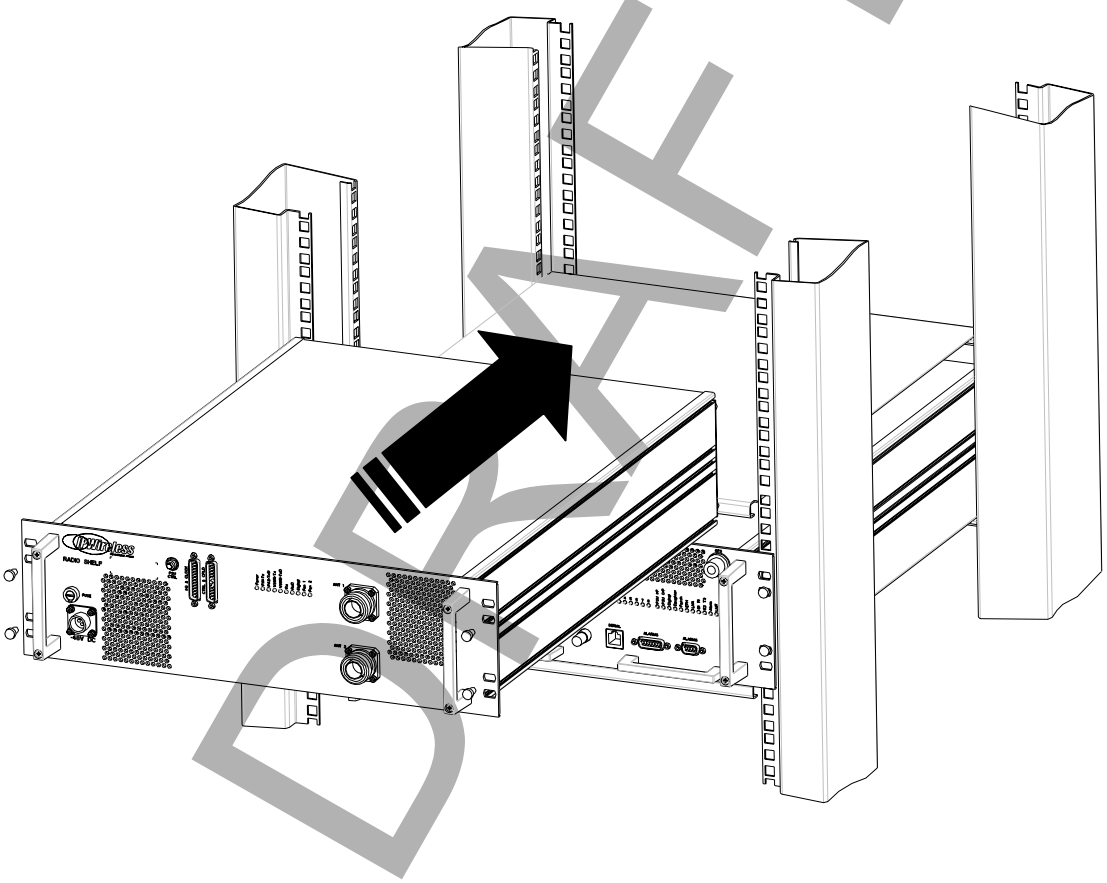

DRAFT

Step 5 Ground Installation

The main Node B ground cable shall use a minimum #2 AWG (Diameter 6.6mm or CSA 33mm2) stranded wire or equivalent earth braid.

The ground cable is terminated on the rear of both shelves of the Node B Rack Mount using terminal that shall fit the M8 (7/16”) stud on the rear of each shelf.

The grounding wire is terminated onto the site grounding ring.

It should be noted that each site shall be designed for specific site, country or local installation requirements.

CAUTION: Ensure that the earth braid or cable is bonded to a common earth with equipment that is co-located with the Node B.

Figure 6-9 : Earth Connection on the rear of each shelf

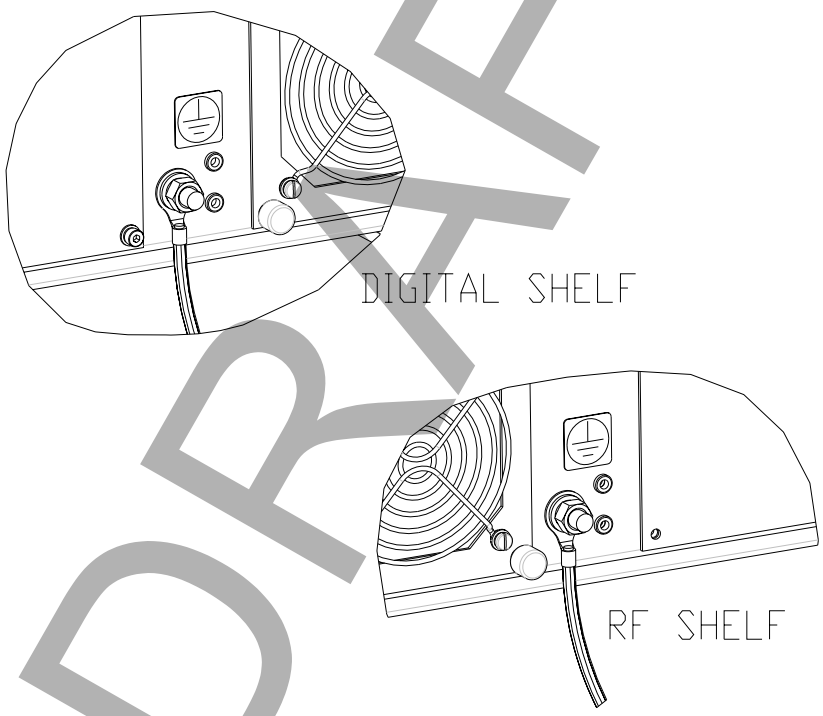

DRAFT

Step 6 DC Power Connection-Digital

The power supply input must be a nominal -48Vdc input, refer to Table 5-1.

The connection of the mains to DC supply is via the cable provided as part of the digital shelf package.

The provided cable assembly has 3 metres of cable with a connector to provide connection to the digital shelf. The tail ends of the cable are stripped and must be terminated to a permanent connection junction/terminal block. The length of the cable may be shortened to facilitate.

Notes:

- Only the cable provided with the digital shelf should be used.
- The connector is keyed to prevent wrong insertion.

Figure 6-10 : Power Connection to the digital shelf

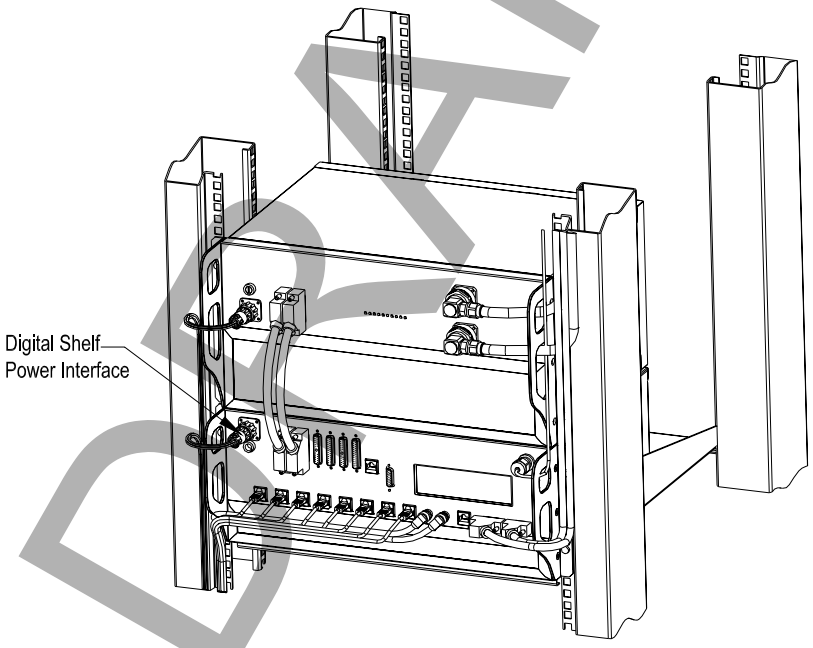

DRAFT

Step 7 DC Power Connection-Radio

The power supply input must be a nominal -48Vdc input, refer to Table 5-1

The connection of the mains to DC supply is via the cable provided as part of the radio shelf package.

The provided cable assembly has 3 metres of cable with a connector to provide connection to the radio shelf. The tail ends of the cable are stripped and must be terminated to a permanent connection junction/terminal block. The length of the cable may be shortened to facilitate.

Note: Only the cable provided with the radio shelf should be used.

Figure 6-11 : Power Connection to the radio shelf

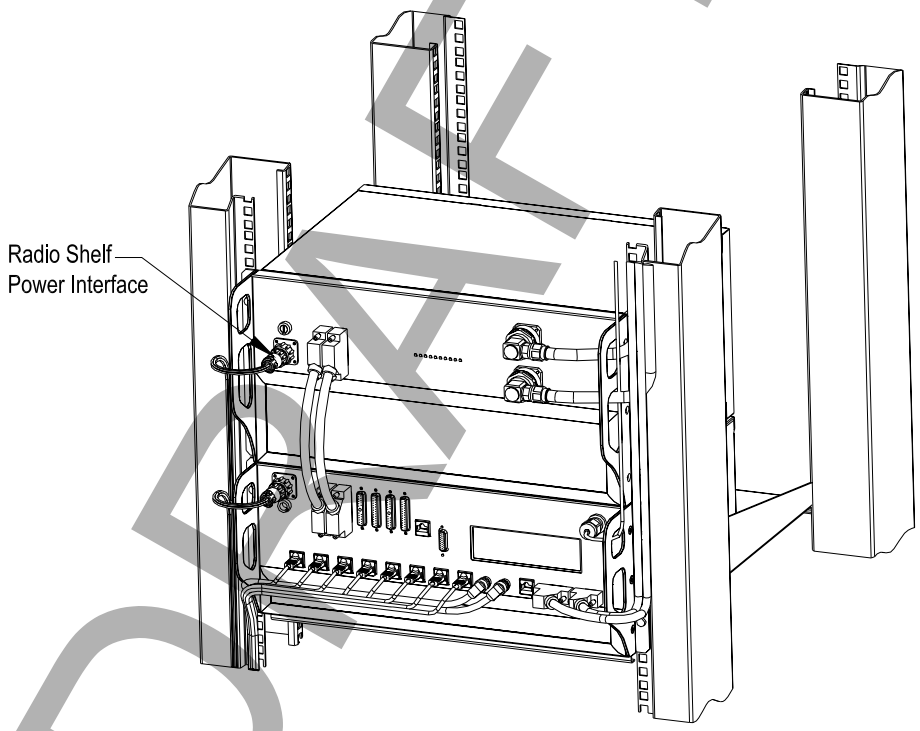

DRAFT

Step 8 Inter-Shelf Connections

The digital shelf is supplied with the shelf interface kit that contains the following items

- I/Q interface cable – 21wayD-hybrid
- Control interface cabe – 25wayD
- PSU control cable – 3way

The figure below illustrates the connection of each of these cables between the digital and radio shelf.

Figure 6-12: Interface Cable Connection – V4A

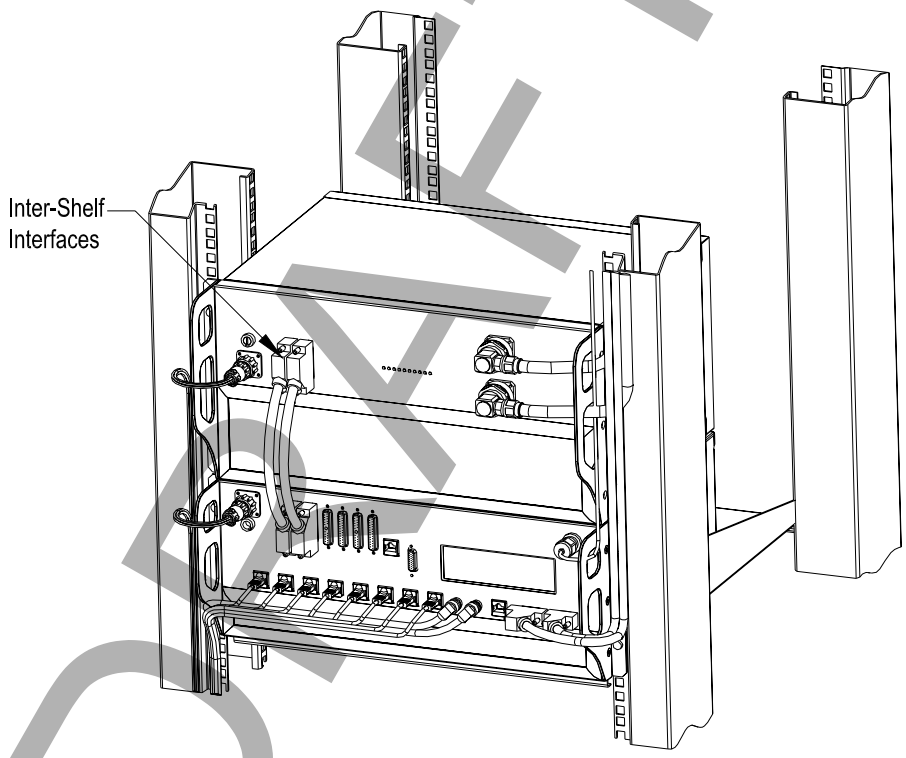

DRAFT

The figure below illustrates the front connections of power, antenna and inter-shelf cables between the digital and radio shelves for the V4B and V4C configurations.

Figure 6-13: Interface Cable Connection – V4B & V4C

GRAPHIC TO BE ADDED

Step 9 Backhaul Connections (Iub) to INC

The Digital Shelf faceplate contains the backhaul connections. The installation can be selected from the following interfaces

- 100BaseT
- E3/T3
- E1/T1

The connections are labeled and shown in the figure below.

Note: If the Node B is in not in the same site location as the serving INC, there must be no greater than a 5 millisecond delay on the backhaul connection. This can be provided by microwave or land based facilities with a reliability rate of 99.9995%.

Figure 6-14 : Backhaul Connections

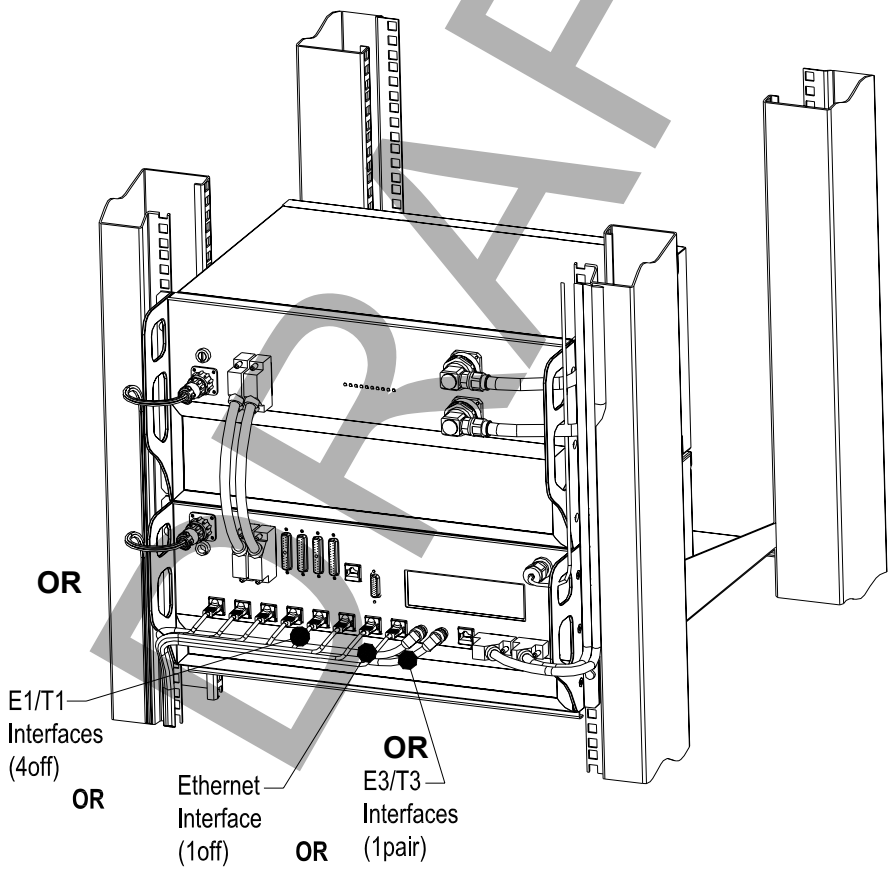

DRAFT

100BaseT Connection - (Eth)

Terminate the Ethernet cables with RJ45 connectors and the cables may be secured to the brackets on the face of the Digital Shelf (Figure 6-14). Test the continuity for the Ethernet cables with test equipment consisting of a main and a remote unit.

The termination for these interfaces is specified within the datasheets for the interfaces. The specification for both cables should be CAT5 - 4 pair, screened cable, recommended Alcatel LANmark-5 F2TP or equivalent **(to add alternatives).**

Notes: Points to remember when installing Category 5 cables for the Node B 100Base T Ethernet Backhaul.

1. Do not kink the cable as the pairs are twisted to support 100Mhz operation and splitting the pairs could reduce the performance of the cable.
2. When installing the RJ45 plugs onto the cable ensure pairs are untwisted to the minimum and that the cable sheath is clamped within the connector. Again this is to ensure the performance of the cable is not reduced.

The pin-outs for the external Ethernet interfaces are given in the following table & figure.
Source: http://www.dcbnet.com/notes/9611t1.html

Table 6-6 : Ethernet Pin-outs using RJ45

1	**RX +**	White w/Green
2	**RX -**	Green
3	**TX +**	White w/Orange
4		Blue
5		White w/Blue
6	**TX -**	Orange
7		White w/Brown
8		Brown

Figure 6-15 : Ethernet Pin-outs using RJ45

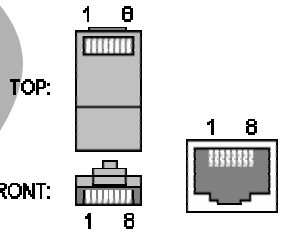

DRAFT

E3/T3 Connections – (Tx + Rx)

Terminate the E3/T3 cables with BNC connectors and the cables may be secured to the brackets on the face of the Digital Shelf (Figure 6-14). Test the continuity for the E3/T3 cables with test equipment consisting of a main and a remote unit.

The termination for these interfaces is specified within the datasheets for the interfaces. The specification for both cables should be 75Ω.

E1/T1 Connections – (1 to 4)

Terminate the E1/T1 cables with RJ45 connectors and the cables may be secured to the brackets on the face of the Digital Shelf (Figure 6-14).

Test the continuity for the E1/T1 cables with test equipment consisting of a main and a remote unit. The pinouts for this interface are shown in the table below.

The termination for these interfaces is specified within the datasheets for the interfaces. The specification for both cables should be CAT5 - 4 pair, screened cable, recommended Alcatel LANmark-5 F2TP or equivalent.

Table 6-7 : T1/E1 Pin-outs

T1 Pinouts		Cable	E1 Pinouts	
1	Rx (ring)	White w/Green	Rx (ring)	**1**
2	Rx (tip)	Green	Rx (tip)	**2**
3	Not used	White w/Orange	Not used	**3**
4	Tx (ring)	Blue	Tx (ring)	**4**
5	Tx (tip)	White w/Blue	Tx (tip)	**5**
6	Not used	Orange	Not used	**6**
7	Not used	White w/Brown	Not used	**7**
8	Not used	Brown	Not used	**8**

DRAFT

Step 10 Antenna Cabling - Installation

Antennas and coaxial cable should be available at the site, and are part of the construction checklist and general assumptions.

Two antennae per Node B Radio Shelf are optimum, allowing receiver diversity and transmit diversity (note: if option fitted), therefore two coaxial cables per Node B are needed. Diversity can be via polarization, in which case two feeder runs to the same antenna are needed, feeding oppositely polarised sectors in the same physical enclosure.

Cables should be properly marked to indicate what antenna the coaxial cables are to be connected to the Node B serving the sector or area.

In the case where only one feeder / antenna is being used, this must be connected to the top connector when viewed from the front of the Node B.

The following installation describes the position of the antenna ports and designations.

Figure 6-16 : Antenna Connections & Routing

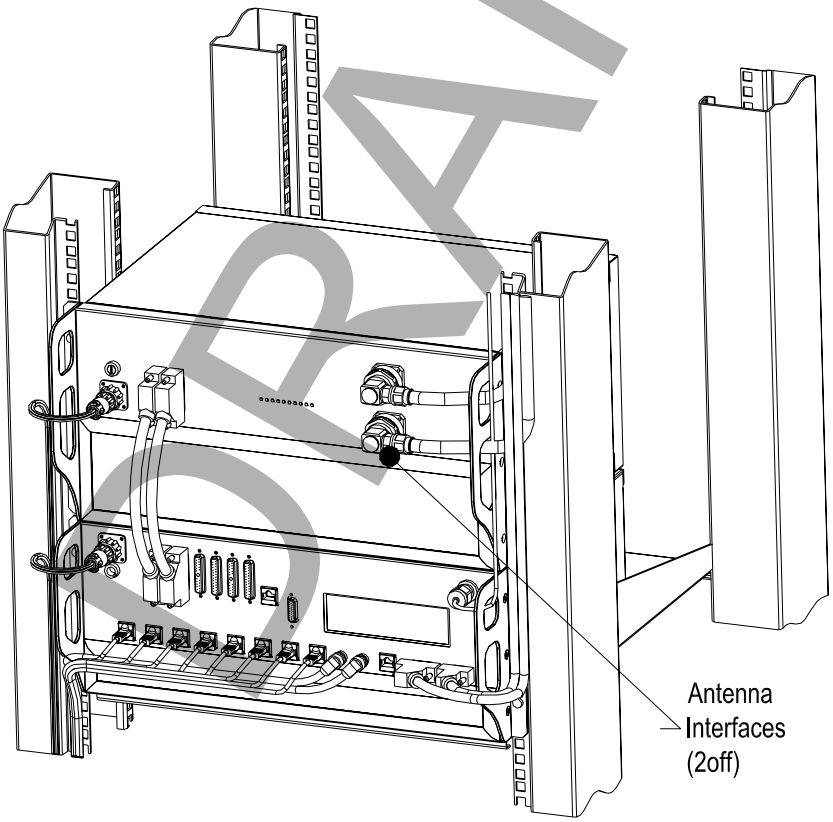

DRAFT

Step 11 Alarm Connections

If local alarms are to be utilised two Dtype connectors are been provided on the Node B digital shelf. The specifications for those interface requirements are below:-

The maximum input voltage is restricted to 39V for a 500A 8/20 uS pulse, with a minimum working voltage of 18V. All six input circuits are the same.

Figure 6-17 : Alarm Outputs & Inputs

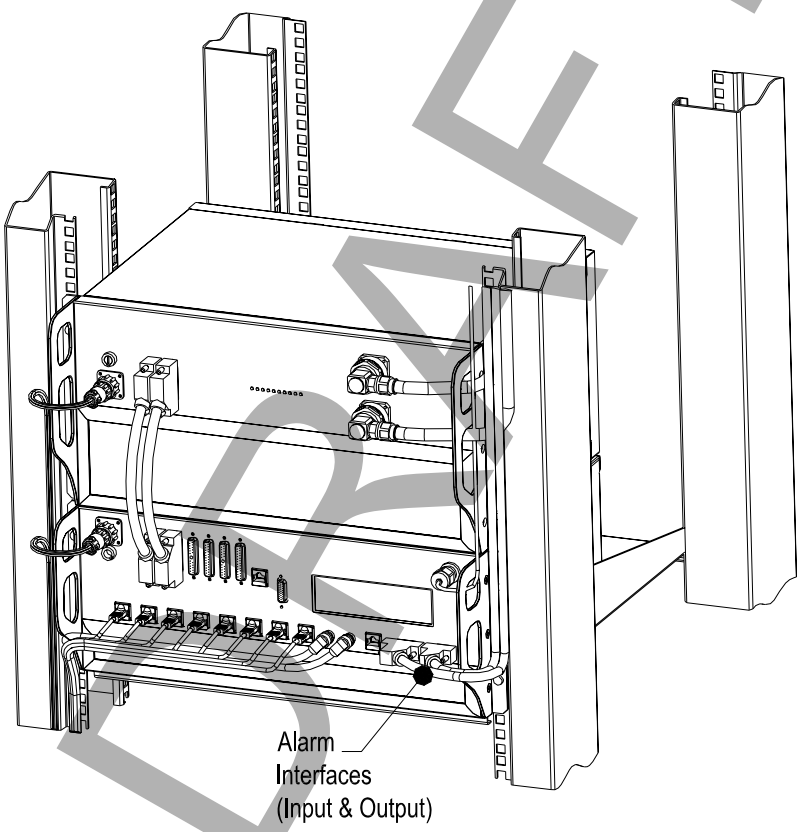

DRAFT

Alarm Inputs

The 6 external alarm inputs are connected via the 15wayD female type located on the right hand side of the digital shelf.

The external alarm inputs are opto-isolated current loops. The voltage and currents shall be supplied by the external source.

The pin-out for the alarm inputs are shown in the table below.

Table 6-8 : Alarm Inputs

Pin #	Signal
1	ALARM_IN_A0
2	ALARM_IN_B0
3	ALARM_IN_A1
4	ALARM_IN_B1
5	ALARM_IN_A2
6	ALARM_IN_B2
7	ALARM_IN_A3
8	ALARM_IN_B3
9	Earth
10	ALARM_IN_A4
11	ALARM_IN_B4
12	ALARM_IN_A5
13	ALARM_IN_B5
14	Earth
15	Earth

Alarm Outputs

The external alarm outputs are connected via the 9wayD female located on the right hand side of the digital shelf.

The external alarm outputs shall be isolated normally-open relay contacts capable of switching 100mA DC.

The pin-out for the alarm inputs are shown in the table below.

Table 6-9 : Alarm Outputs

Pin	Signal
1	ALARM_OUT0+
2	ALARM_OUT0-
3	Earth
4	ALARM_OUT0+
5	ALARM_OUT0-
6	Earth
7	Earth
8	Earth
9	Earth

DRAFT

Step 12 GPS Installation & Operation

The Node B has an external/remote GPS antenna and receiver. The connection for the antenna (N-Type) is located on the Digital Shelf**, Figure 6-18**.

The GPS timing signal is used by the Node B for the TDD frame timing, so that all Node B's in a network are synchronized. The GPS signal is also used by the master oscillator for a frequency reference. The Node B can operate for two hours after a loss of GPS timing but a gradual drift of the frame timing will result in system interference and a loss of Node B selection / reselection capability.

A suitable Node B GPS antenna is shipped with every Node B. This antenna should be used with a maximum of 15 metres cable of RG6 type cable plus male N-type connectors at each end. For longer runs, the cable losses will affect signal strength and could impede GPS signal performance.

For proper operation of the GPS receiver, the Node B GPS Antenna must have a clear southern view of the sky (northern hemisphere installations). A site survey should be done before Node B installation to verify that the Node B installation location is suitable for GPS reception.

A simple survey method is to take a handheld GPS receiver to the site and verify that GPS lock is obtained in the location of the Node B installation. The handheld GPS should be able to obtain a "locked" condition within 2 minutes of power-on, and should be able to see a minimum of 4 satellites at all times.

The GPS receiver, integral to the Node B Digital shelf, is automatically enabled when the Node B is powered and there are no adjustments or settings to be made by the user.

Note: When the Node B installation is on or near a tower or building wall, the GPS survey should replicate the configuration.

Figure 6-18 : GPS Antenna

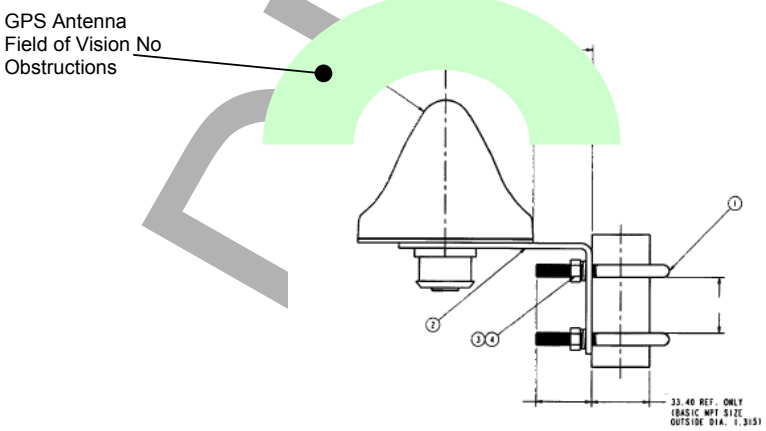

DRAFT

Figure 6-19 : GPS Antenna Connection

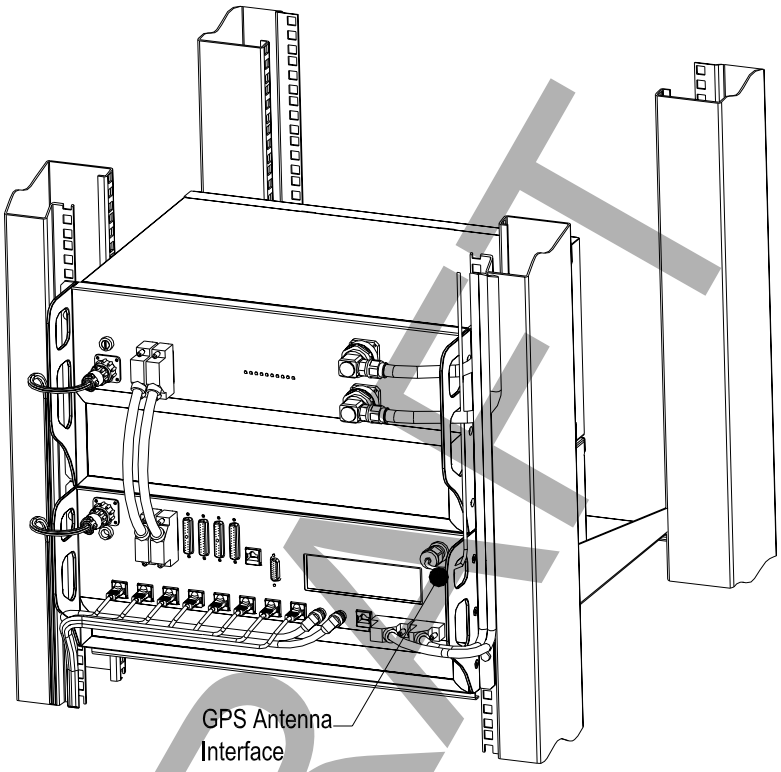

DRAFT

Step 13 TTLNA Interfaces

<details to be added>

Figure 6-20 : TTLNA Connections

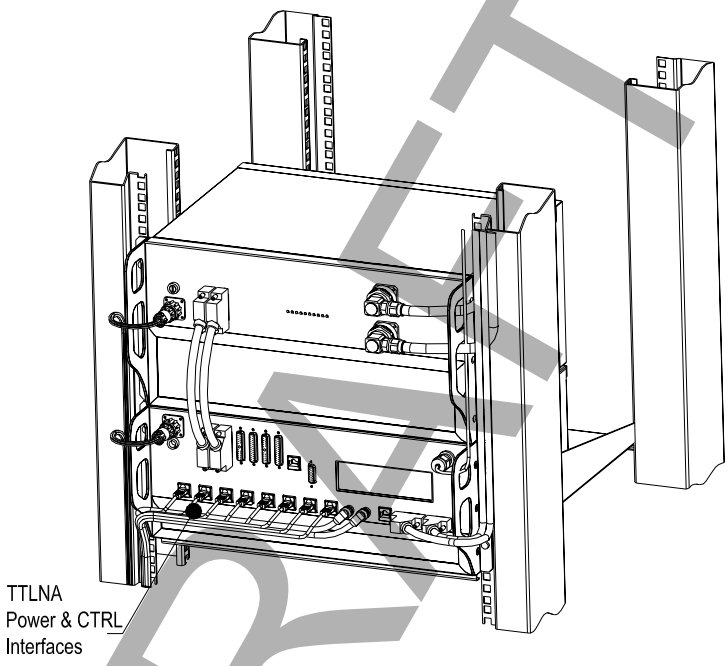

DRAFT

7. APPENDIX

Appendix A - Installation Check Card

Step	Action	Complete	Comment	Page
1	Perform pre-installation site check			
2	Parts shipped/tools required			
3	Site Preparation			
4	Mounting rack/cabinet installation			
5	Grounding installation (all shelves)			
6	DC Power Connection-Digital Shelf			
7	DC Power Connection-Radio Shelf(s)			
8	Inter-shelf interface connections			
9	Backhaul Connections to INC			
10	Antennas Cabling - Installation			
11	Alarm Connections			
12	GPS Installation & Operation			
13	TTLNA Interfaces			

DRAFT

Appendix B – Outdoor Cabinet Specification Requirements

SPECIFICATION

TO

BE

ADDED

Appendix C – Glossary

GLOSSARY	
ADC	Analog to Digital Converter
ARP	Address Resolution Protocol
BTS	Base Transceiver Station
DAC	Digital to Analog Converter
Downlink	From Network to the User Equipment
DSCH	Downlink Shared Channel
ESD	Electro Static Discharge
EM	Element Manager
EIA	Engineering Industry Association
Ethernet	10BaseT or 100baseT
ETSI	European Telecommunications Standardization Institute
FCC	Federal Communication Commission
FPGA	Field Programmable Gate Array
GPS	Global Positioning System
HTTP	Hyper-Text Transfer Protocol
INC	Integrated Network Controller
IP	Internet Protocol
ISP	Internet Service Provider
ITFS	Instructional Television Fi xed Service
IUB	Interface Between the INC & NodeB
LMT	Local Maintenance Terminal
LNA	Low Noise Amplifier
MCP	Multimedia Communications Port
MAC	Media Access Control
Mcps	Mega Chips per Second
MMDS	Multichannel Multipoint Distribution Service
MSPS	Mega Samples Per Second
MTU	Maximum Transmission Unit
Node B	A UMTS Radio Base Station
PDU	Protocol Data Unit
PLL	Phase Locked Loop
QPSK	Quadrature Phase Shift Keying
RAM	Random Access Memory
RLC	Radio Link Control
SRAM	Static RAM
T1/E1	1536kbps/ 2048Kbps pipe

DRAFT

GLOSSARY	
T3/E3	45Mbps or 34Mbps
UE	User Equipment
UMTS	Universal Mobile Telecommunications System
Uplink	From User Equipment to the Network
USB	Universal Serial Bus
USCH	Uplink Shared Channel
UPS	Uninterruptible Power Supply Unit
UTRAN	UMTS Terrestrial Radio Access Network
VSWR	Voltage Standing wave ratio
VCXO	Voltage Controlled Crystal Oscillator

DRAFT

END OF DOCUMENT

DRAFT