Appendix 3. SAR Distribution Scans

This appendix contains SAR distribution scans which are not included in the total number of pages for this report.

Scan Reference Number	Title
001	Side A Horizontal Up of EUT Facing Phantom LTE 14 10MHz BW 1 RB QPSK CH23330
002	Side A Horizontal Up of EUT Facing Phantom LTE 14 10MHz BW 50 % RB QPSK CH23330
003	Side A Horizontal Up of EUT Facing Phantom LTE 14 10MHz BW 100 % RB QPSK CH23330
004	Side B Horizontal Down of EUT Facing Phantom LTE 14 10MHz BW 1 RB QPSK CH23330
005	Side B Horizontal Down of EUT Facing Phantom LTE 14 10MHz BW 50 % RB QPSK CH23330
006	Side C Vertical Front of EUT Facing Phantom LTE 14 10MHz BW 1 RB QPSK CH23330
007	Side C Vertical Front of EUT Facing Phantom LTE 14 10MHz BW 50 % RB QPSK CH23330
008	Side D Vertical Back of EUT Facing Phantom LTE 14 10MHz BW 1 RB QPSK CH23330
009	Side D Vertical Back of EUT Facing Phantom LTE 14 10MHz BW 50 % RB QPSK CH23330
010	Side E Tip of EUT Facing Phantom LTE 14 10MHz BW 1 RB QPSK CH23330
011	Side E Tip of EUT Facing Phantom LTE 14 10MHz BW 50 % RB QPSK CH23330
012	Side A Horizontal Up of the Antenna Facing Phantom LTE 14 10MHz BW 1 RB QPSK CH23330
013	Side A Horizontal Up of the Antenna Facing Phantom LTE 14 10MHz BW 50 % RB QPSK CH23330
014	Side B Horizontal Down of the Antenna Facing Phantom LTE 14 10MHz BW 1 RB QPSK CH23330
015	Side B Horizontal Down of the Antenna Facing Phantom LTE 14 10MHz BW 50 % RB QPSK CH23330
016	Side B Horizontal Down of the Antenna Facing Phantom LTE 14 10MHz BW 100 % RB QPSK CH23330
017	Side C Vertical Front of the Antenna Facing Phantom LTE 14 10MHz BW 1 RB QPSK CH23330

SAR Distribution Scan (Continued)	
018	Side C Vertical Front of the Antenna Facing Phantom LTE 14 10MHz BW 50 % RB QPSK CH23330
019	Side D Vertical Back of the Antenna Facing Phantom LTE 14 10MHz BW 1 RB QPSK CH23330
020	Side D Vertical Back of the Antenna Facing Phantom LTE 14 10MHz BW 50 % RB QPSK CH23330
021	Side D Vertical Back of the Antenna Facing Phantom LTE 14 10MHz BW 100 % RB QPSK CH23330
022	Side E Tip of the Antenna Facing Phantom LTE 14 10MHz BW 1 RB QPSK CH23330
023	Side E Tip of the Antenna Facing Phantom LTE 14 10MHz BW 50 % RB QPSK CH23330
024	System Performance Check 750MHz Body 03 04 14
025	System Performance Check 750MHz Body 04 04 14
026	System Performance Check 750MHz Body 07 04 14

001: Side A Horizontal Up of EUT Facing Phantom LTE 14 10MHz BW 1 RB QPSK CH23330
Date 07/04/2014
DUT: General Dynamics Broadband; Type: USB Dongle; Serial: APJHD06005222

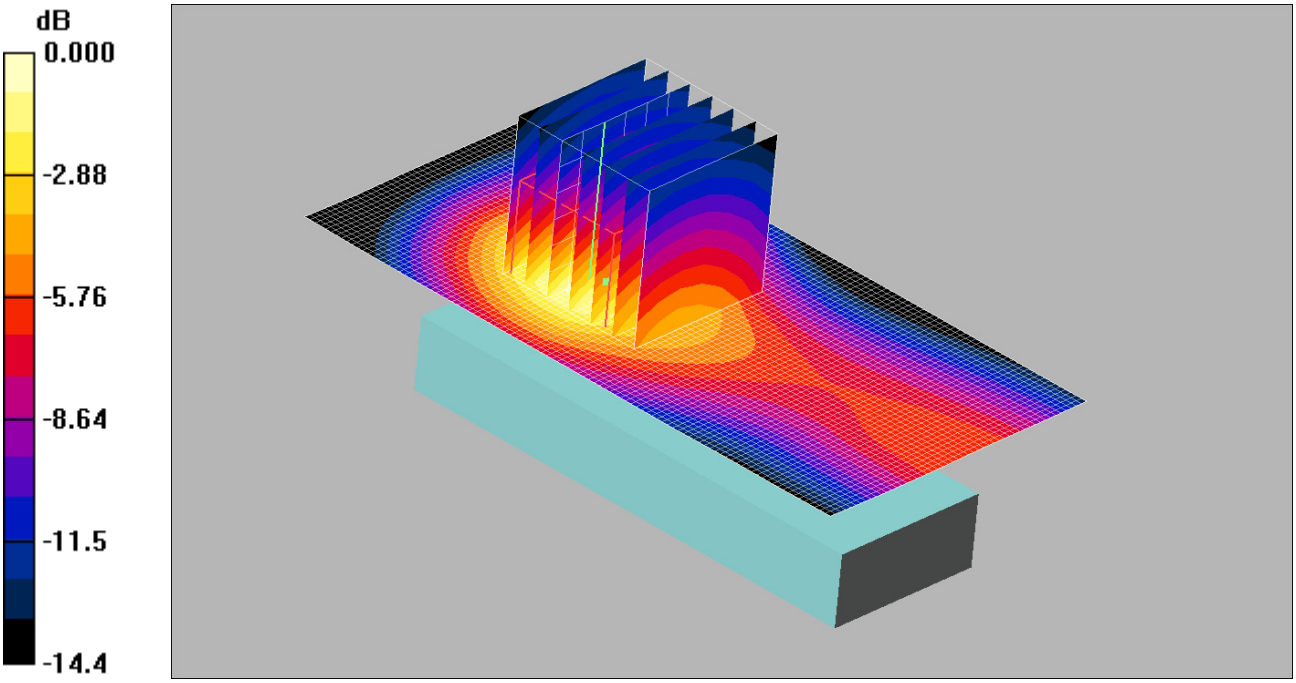

0 dB = 0.968mW/g

Communication System: LTE - Band 14 / 10MHz Channel; Frequency: 793 MHz;Duty Cycle: 1:1
Medium: 750 MHz MSL Medium parameters used (interpolated): f = 793 MHz; σ = 0.985 mho/m; εr = 54.2; ρ = 1000 kg/m3
Phantom section: Flat Section
DASY4 Configuration:
- Probe: ES3DV3 - SN3335; ConvF(6.2, 6.2, 6.2);
- Sensor-Surface: 4mm (Mechanical Surface Detection)
- Electronics: DAE3 Sn450; Calibrated: 31/10/2013
- Phantom: ELI v5.0; Type: QDOVA002AA; Serial: TP: 1235
- Measurement SW: DASY4, V4.7 Build 80; Postprocessing SW: SEMCAD, V1.8 Build 186

Side A Horizontal Up of EUT Facing Phantom - Middle/Area Scan (51x101x1): Measurement grid: dx=12mm, dy=12mm
Maximum value of SAR (interpolated) = 0.947 mW/g

Side A Horizontal Up of EUT Facing Phantom - Middle/Zoom Scan (7x7x7) (7x7x7)/Cube 0: Measurement grid: dx=5mm, dy=5mm, dz=5mm
Reference Value = 20.4 V/m; Power Drift = -0.122 dB
Peak SAR (extrapolated) = 1.60 W/kg
SAR(1 g) = 0.869 mW/g; SAR(10 g) = 0.470 mW/g
Maximum value of SAR (measured) = 0.968 mW/g

002: Side A Horizontal Up of EUT Facing Phantom LTE 14 10MHz BW 50 % RB QPSK CH23330
Date: 03/04/2014
DUT: General Dynamics Broadband; Type: USB Dongle; Serial: APJHD06005222

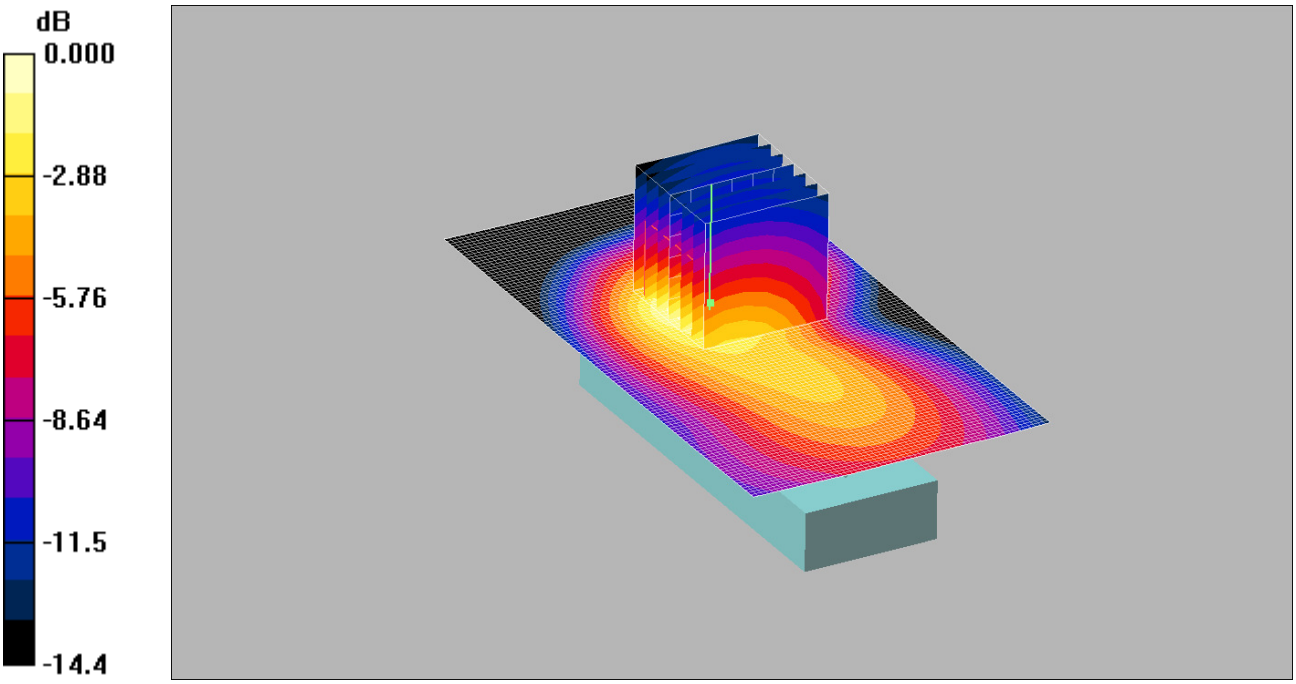

0 dB = 0.907mW/g

Communication System: LTE - Band 14 / 10MHz Channel; Frequency: 793 MHz;Duty Cycle: 1:1
Medium: 750 MHz MSL Medium parameters used (interpolated): f = 793 MHz; σ = 0.959 mho/m; ε_r = 52.9; ρ = 1000 kg/m^3
Phantom section: Flat Section
DASY4 Configuration:
- Probe: ES3DV3 - SN3335; ConvF(6.2, 6.2, 6.2);
- Sensor-Surface: 4mm (Mechanical Surface Detection)
- Electronics: DAE3 Sn450; Calibrated: 31/10/2013
- Phantom: ELI v5.0; Type: QDOVA002AA; Serial: TP: 1235
- Measurement SW: DASY4, V4.7 Build 80; Postprocessing SW: SEMCAD, V1.8 Build 186

Side A Horizontal Up of EUT Facing Phantom - Middle/Area Scan (61x111x1): Measurement grid: dx=12mm, dy=12mm
Maximum value of SAR (interpolated) = 0.922 mW/g
Side A Horizontal Up of EUT Facing Phantom - Middle/Zoom Scan (7x7x7) (7x7x7)/Cube 0: Measurement grid: dx=5mm, dy=5mm, dz=5mm
Reference Value = 23.5 V/m; Power Drift = -0.050 dB
Peak SAR (extrapolated) = 1.55 W/kg
SAR(1 g) = 0.836 mW/g; SAR(10 g) = 0.456 mW/g
Maximum value of SAR (measured) = 0.907 mW/g

003: Side A Horizontal Up of EUT Facing Phantom LTE 14 10MHz BW 100 % RB QPSK CH23330
Date: 03/04/2014
DUT: General Dynamics Broadband; Type: USB Dongle; Serial: APJHD06005222

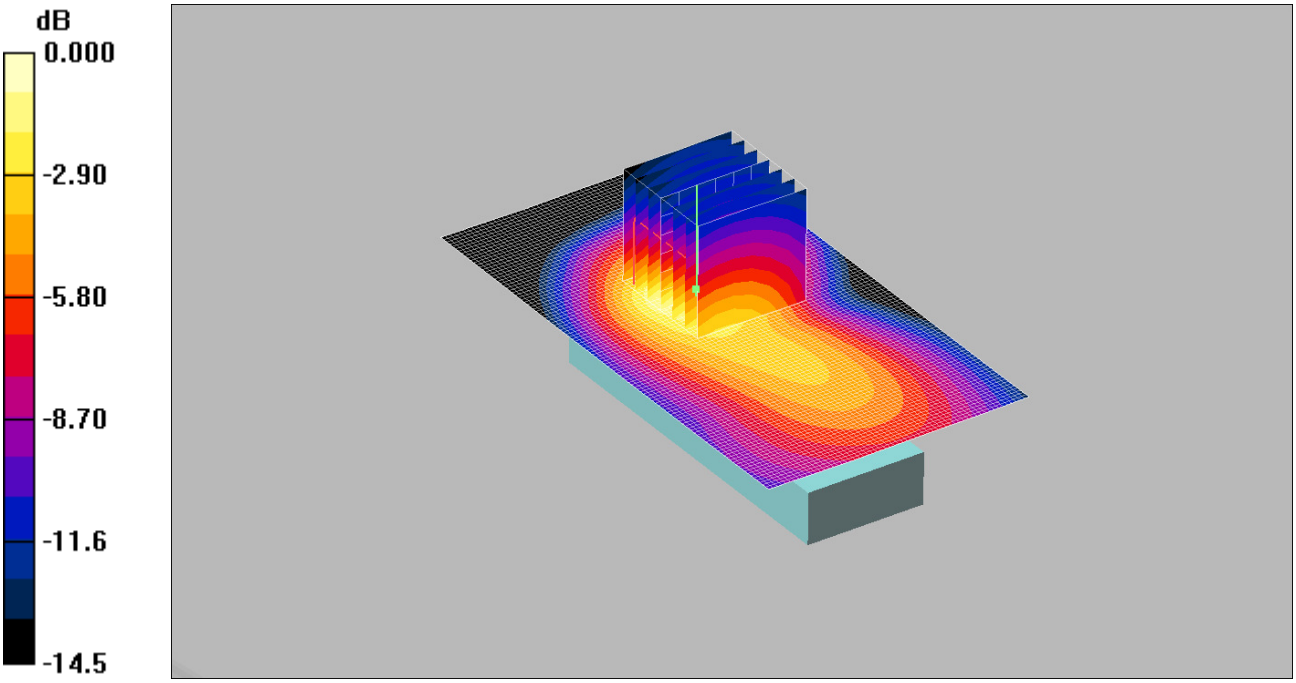

0 dB = 0.851mW/g

Communication System: LTE - Band 14 / 10MHz Channel; Frequency: 793 MHz;Duty Cycle: 1:1
Medium: 750 MHz MSL Medium parameters used (interpolated): f = 793 MHz; σ = 0.959 mho/m; ε_r = 52.9; ρ = 1000 kg/m^3
Phantom section: Flat Section
DASY4 Configuration:
- Probe: ES3DV3 - SN3335; ConvF(6.2, 6.2, 6.2);
- Sensor-Surface: 4mm (Mechanical Surface Detection)
- Electronics: DAE3 Sn450; Calibrated: 31/10/2013
- Phantom: ELI v5.0; Type: QDOVA002AA; Serial: TP: 1235
- Measurement SW: DASY4, V4.7 Build 80; Postprocessing SW: SEMCAD, V1.8 Build 186

Side A Horizontal Up of EUT Facing Phantom - Middle/Area Scan (61x111x1): Measurement grid: dx=12mm, dy=12mm
Maximum value of SAR (interpolated) = 0.824 mW/g
Side A Horizontal Up of EUT Facing Phantom - Middle/Zoom Scan (7x7x7) (7x7x7)/Cube 0: Measurement grid: dx=5mm, dy=5mm, dz=5mm
Reference Value = 22.3 V/m; Power Drift = -0.037 dB
Peak SAR (extrapolated) = 1.45 W/kg
SAR(1 g) = 0.777 mW/g; SAR(10 g) = 0.423 mW/g
Maximum value of SAR (measured) = 0.851 mW/g

004: Side B Horizontal Down of EUT Facing Phantom LTE 14 10MHz BW 1 RB QPSK CH23330
Date: 03/04/2014
DUT: General Dynamics Broadband; Type: USB Dongle; Serial: APJHD06005222

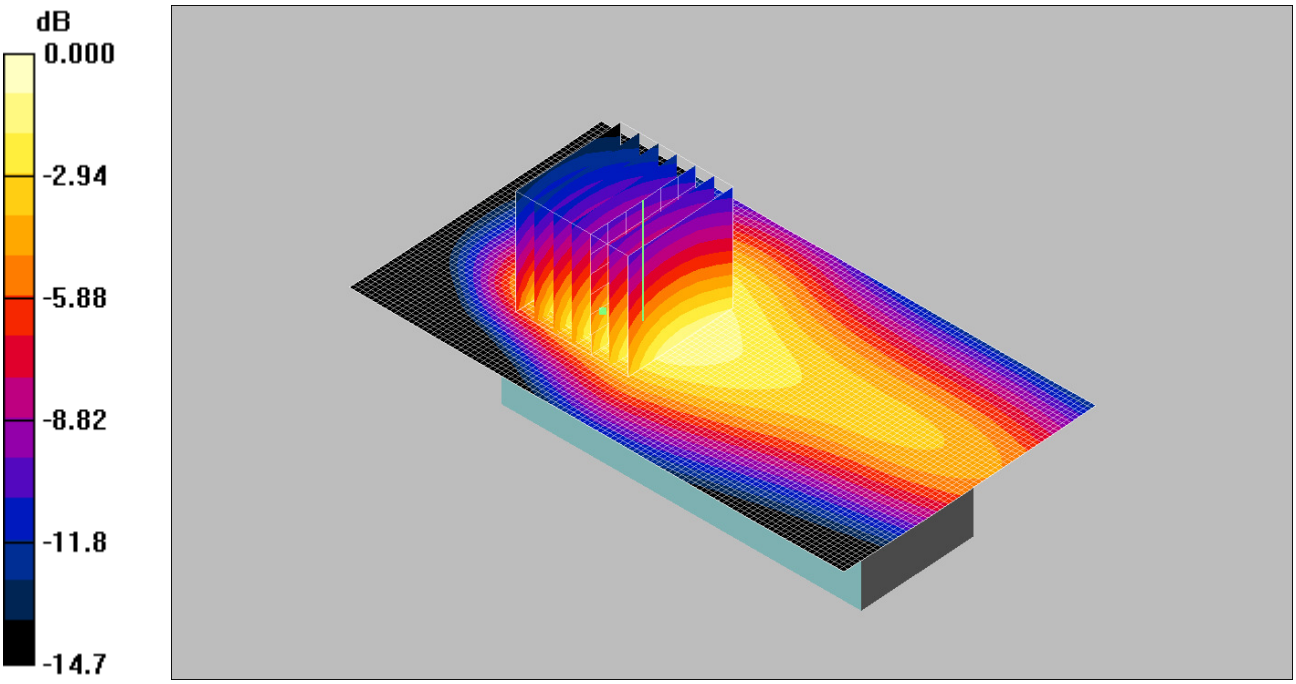

0 dB = 0.640mW/g

Communication System: LTE - Band 14 / 10MHz Channel; Frequency: 793 MHz;Duty Cycle: 1:1
Medium: 750 MHz MSL Medium parameters used (interpolated): f = 793 MHz; σ = 0.959 mho/m; ε_r = 52.9; ρ = 1000 kg/m^3
Phantom section: Flat Section
DASY4 Configuration:
- Probe: ES3DV3 - SN3335; ConvF(6.2, 6.2, 6.2);
- Sensor-Surface: 4mm (Mechanical Surface Detection)
- Electronics: DAE3 Sn450; Calibrated: 31/10/2013
- Phantom: ELI v5.0; Type: QDOVA002AA; Serial: TP: 1235
- Measurement SW: DASY4, V4.7 Build 80; Postprocessing SW: SEMCAD, V1.8 Build 186

Side A Horizontal Down of EUT Facing Phantom - Middle/Area Scan (61x111x1): Measurement grid: dx=12mm, dy=12mm
Maximum value of SAR (interpolated) = 0.593 mW/g
Side A Horizontal Down of EUT Facing Phantom - Middle/Zoom Scan (7x7x7) 2 (7x7x7)/Cube 0:
Measurement grid: dx=5mm, dy=5mm, dz=5mm
Reference Value = 21.7 V/m; Power Drift = 0.001 dB
Peak SAR (extrapolated) = 1.21 W/kg
SAR(1 g) = 0.574 mW/g; SAR(10 g) = 0.351 mW/g
Maximum value of SAR (measured) = 0.640 mW/g

005: Side B Horizontal Down of EUT Facing Phantom LTE 14 10MHz BW 50 % RB QPSK CH23330
Date: 03/04/2014
DUT: General Dynamics Broadband; Type: USB Dongle; Serial: APJHD06005222

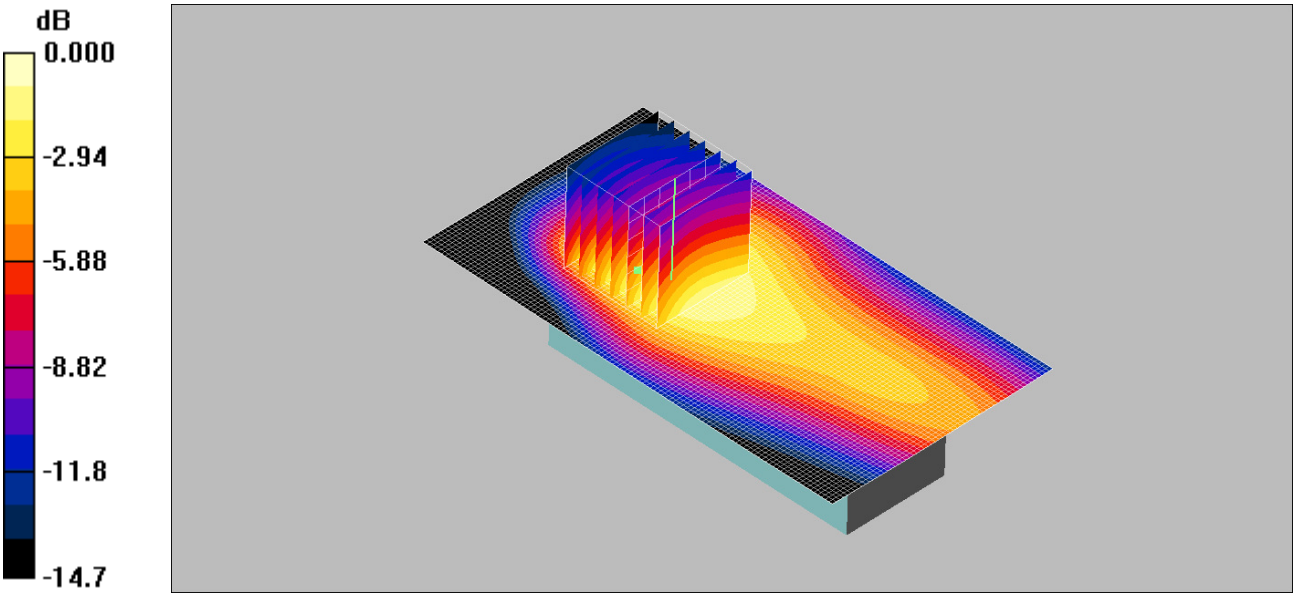

0 dB = 0.684mW/g

Communication System: LTE - Band 14 / 10MHz Channel; Frequency: 793 MHz;Duty Cycle: 1:1
Medium: 750 MHz MSL Medium parameters used (interpolated): f = 793 MHz; σ = 0.959 mho/m; ε_r = 52.9; ρ = 1000 kg/m^3
Phantom section: Flat Section
DASY4 Configuration:
- Probe: ES3DV3 - SN3335; ConvF(6.2, 6.2, 6.2);
- Sensor-Surface: 4mm (Mechanical Surface Detection)
- Electronics: DAE3 Sn450; Calibrated: 31/10/2013
- Phantom: ELI v5.0; Type: QDOVA002AA; Serial: TP: 1235
- Measurement SW: DASY4, V4.7 Build 80; Postprocessing SW: SEMCAD, V1.8 Build 186

Side B Horizontal Down of EUT Facing Phantom - Middle/Area Scan (61x111x1): Measurement grid: dx=12mm, dy=12mm
Maximum value of SAR (interpolated) = 0.644 mW/g
Side B Horizontal Down of EUT Facing Phantom - Middle/Zoom Scan (7x7x7) 2 (7x7x7)/Cube 0:
Measurement grid: dx=5mm, dy=5mm, dz=5mm
Reference Value = 22.6 V/m; Power Drift = 0.019 dB
Peak SAR (extrapolated) = 1.29 W/kg
SAR(1 g) = 0.618 mW/g; SAR(10 g) = 0.375 mW/g
Maximum value of SAR (measured) = 0.684 mW/g

006: Side C Vertical Front of EUT Facing Phantom LTE 14 10MHz BW 1 RB QPSK CH23330
Date: 04/04/2014
DUT: General Dynamics Broadband; Type: USB Dongle; Serial: APJHD06005222

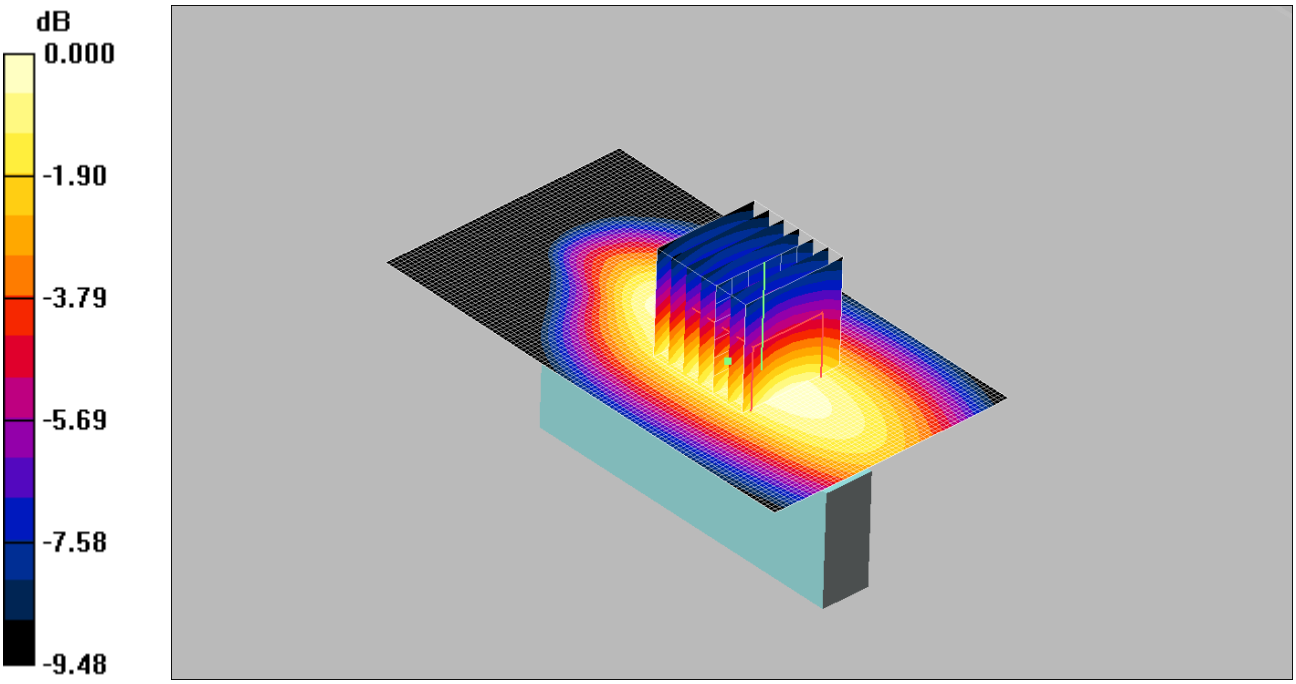

0 dB = 0.366mW/g

Communication System: LTE - Band 14 / 10MHz Channel; Frequency: 793 MHz;Duty Cycle: 1:1
Medium: 750 MHz MSL Medium parameters used (interpolated): f = 793 MHz; σ = 0.959 mho/m; ε_r = 52.9; ρ = 1000 kg/m^3
Phantom section: Flat Section
DASY4 Configuration:
- Probe: ES3DV3 - SN3335; ConvF(6.2, 6.2, 6.2);
- Sensor-Surface: 4mm (Mechanical Surface Detection)
- Electronics: DAE3 Sn450; Calibrated: 31/10/2013
- Phantom: ELI v5.0; Type: QDOVA002AA; Serial: TP: 1235
- Measurement SW: DASY4, V4.7 Build 80; Postprocessing SW: SEMCAD, V1.8 Build 186

Side C Vertical Front of EUT Facing Phantom - Middle/Area Scan (61x111x1): Measurement grid: dx=12mm, dy=12mm
Maximum value of SAR (interpolated) = 0.360 mW/g
Side C Vertical Front of EUT Facing Phantom - Middle/Zoom Scan (7x7x7) (7x7x7)/Cube 0: Measurement grid: dx=5mm, dy=5mm, dz=5mm
Reference Value = 18.4 V/m; Power Drift = 0.025 dB
Peak SAR (extrapolated) = 0.491 W/kg
SAR(1 g) = 0.343 mW/g; SAR(10 g) = 0.233 mW/g
Maximum value of SAR (measured) = 0.366 mW/g

007: Side C Vertical Front of EUT Facing Phantom LTE 14 10MHz BW 50 % RB QPSK CH23330
Date: 04/04/2014
DUT: General Dynamics Broadband; Type: USB Dongle; Serial: APJHD06005222

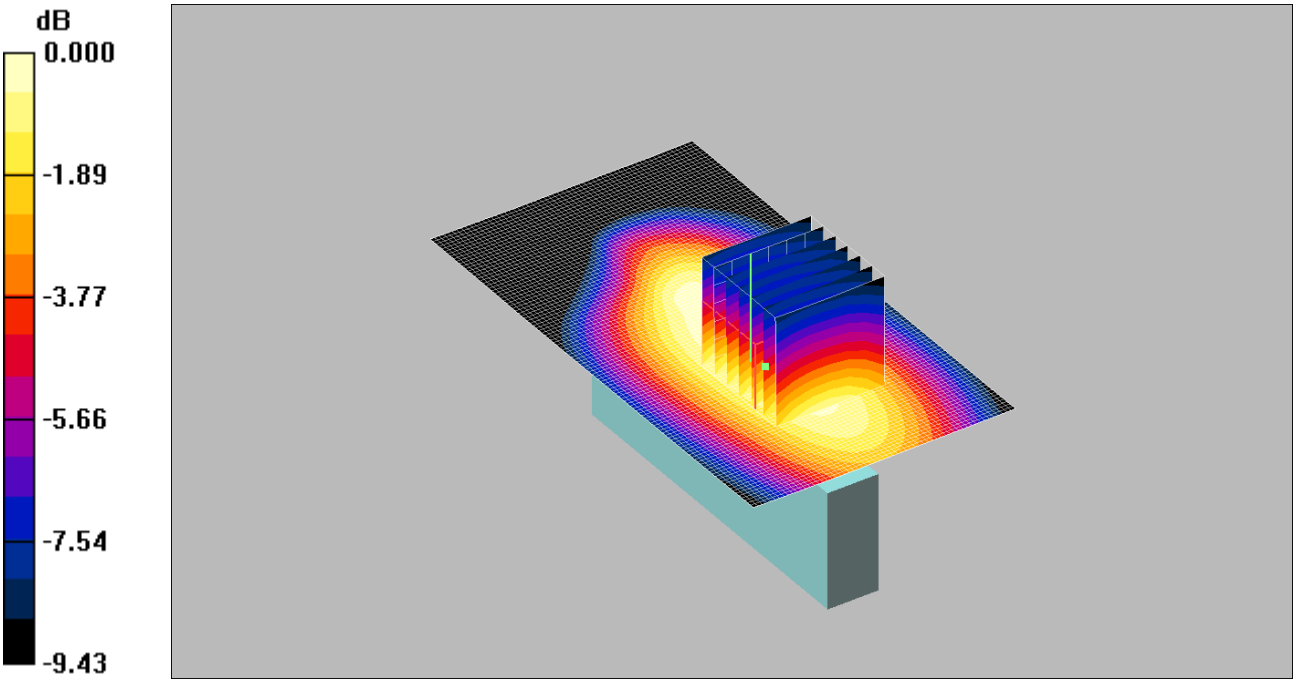

0 dB = 0.364mW/g

Communication System: LTE - Band 14 / 10MHz Channel; Frequency: 793 MHz;Duty Cycle: 1:1
Medium: 750 MHz MSL Medium parameters used (interpolated): f = 793 MHz; σ = 0.959 mho/m; ε_r = 52.9; ρ = 1000 kg/m^3
Phantom section: Flat Section
DASY4 Configuration:
- Probe: ES3DV3 - SN3335; ConvF(6.2, 6.2, 6.2);
- Sensor-Surface: 4mm (Mechanical Surface Detection)
- Electronics: DAE3 Sn450; Calibrated: 31/10/2013
- Phantom: ELI v5.0; Type: QDOVA002AA; Serial: TP: 1235
- Measurement SW: DASY4, V4.7 Build 80; Postprocessing SW: SEMCAD, V1.8 Build 186

Side C Vertical Front of EUT Facing Phantom - Middle/Area Scan (61x111x1): Measurement grid: dx=12mm, dy=12mm
Maximum value of SAR (interpolated) = 0.369 mW/g
Side C Vertical Front of EUT Facing Phantom - Middle/Zoom Scan (7x7x7) (7x7x7)/Cube 0: Measurement grid: dx=5mm, dy=5mm, dz=5mm
Reference Value = 19.2 V/m; Power Drift = -0.023 dB
Peak SAR (extrapolated) = 0.486 W/kg
SAR(1 g) = 0.341 mW/g; SAR(10 g) = 0.233 mW/g
Maximum value of SAR (measured) = 0.364 mW/g

008: Side D Vertical Back of EUT Facing Phantom LTE 14 10MHz BW 1 RB QPSK CH23330
Date: 04/04/2014
DUT: General Dynamics Broadband; Type: USB Dongle; Serial: APJHD06005222

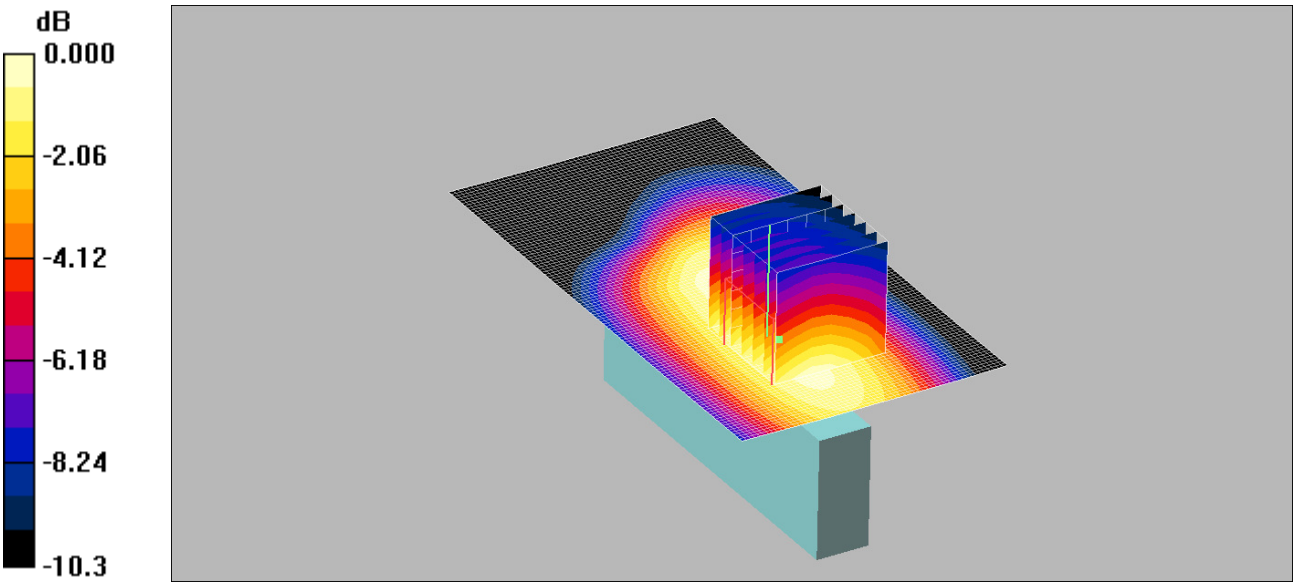

0 dB = 0.238mW/g

Communication System: LTE - Band 14 / 10MHz Channel; Frequency: 793 MHz;Duty Cycle: 1:1
Medium: 750 MHz MSL Medium parameters used (interpolated): f = 793 MHz; σ = 0.959 mho/m; ε_r = 52.9; ρ = 1000 kg/m^3
Phantom section: Flat Section
DASY4 Configuration:
- Probe: ES3DV3 - SN3335; ConvF(6.2, 6.2, 6.2);
- Sensor-Surface: 4mm (Mechanical Surface Detection)
- Electronics: DAE3 Sn450; Calibrated: 31/10/2013
- Phantom: ELI v5.0; Type: QDOVA002AA; Serial: TP: 1235
- Measurement SW: DASY4, V4.7 Build 80; Postprocessing SW: SEMCAD, V1.8 Build 186

Side D Vertical Back of EUT Facing Phantom - Middle/Area Scan (61x111x1): Measurement grid: dx=12mm, dy=12mm
Maximum value of SAR (interpolated) = 0.231 mW/g
Side D Vertical Back of EUT Facing Phantom - Middle/Zoom Scan (7x7x7) (7x7x7)/Cube 0: Measurement grid: dx=5mm, dy=5mm, dz=5mm
Reference Value = 14.9 V/m; Power Drift = -0.133 dB
Peak SAR (extrapolated) = 0.314 W/kg
SAR(1 g) = 0.221 mW/g; SAR(10 g) = 0.152 mW/g
Maximum value of SAR (measured) = 0.238 mW/g

009: Side D Vertical Back of EUT Facing Phantom LTE 14 10MHz BW 50 % RB QPSK CH23330
Date: 04/04/2014
DUT: General Dynamics Broadband; Type: USB Dongle; Serial: APJHD06005222

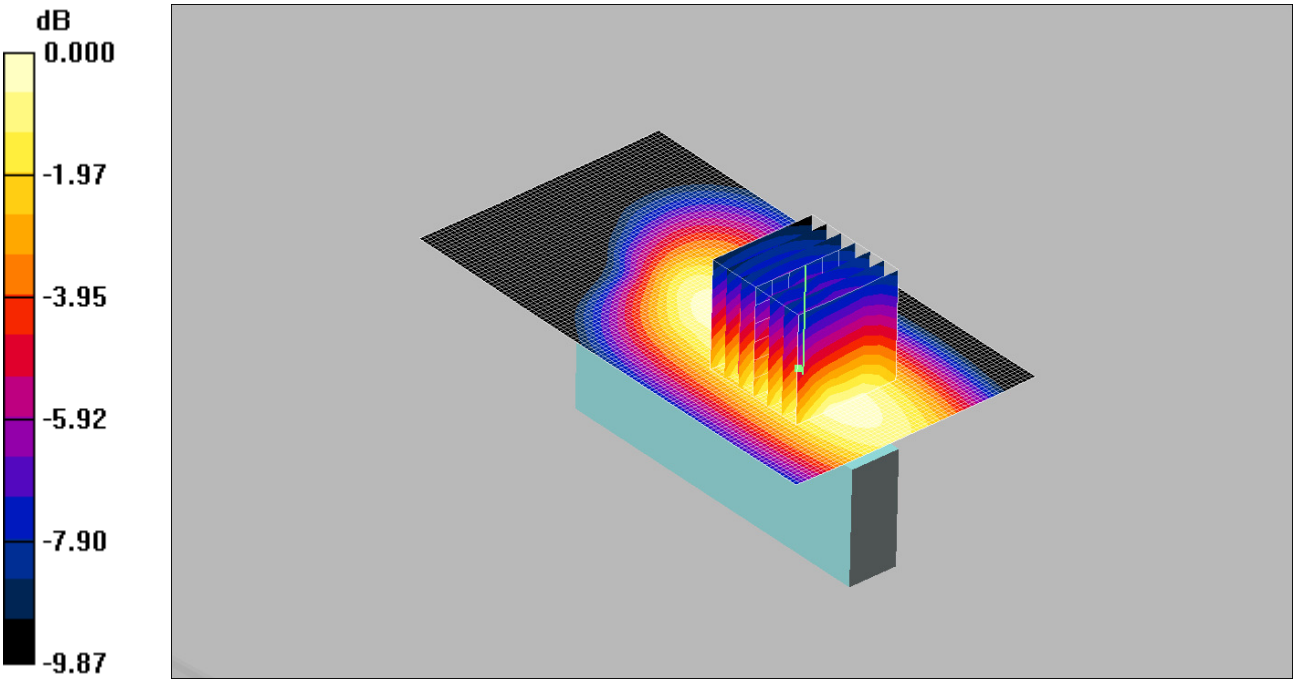

0 dB = 0.246mW/g

Communication System: LTE - Band 14 / 10MHz Channel; Frequency: 793 MHz;Duty Cycle: 1:1
Medium: 750 MHz MSL Medium parameters used (interpolated): f = 793 MHz; σ = 0.959 mho/m; ε_r = 52.9; ρ = 1000 kg/m^3
Phantom section: Flat Section
DASY4 Configuration:
- Probe: ES3DV3 - SN3335; ConvF(6.2, 6.2, 6.2);
- Sensor-Surface: 4mm (Mechanical Surface Detection)
- Electronics: DAE3 Sn450; Calibrated: 31/10/2013
- Phantom: ELI v5.0; Type: QDOVA002AA; Serial: TP: 1235
- Measurement SW: DASY4, V4.7 Build 80; Postprocessing SW: SEMCAD, V1.8 Build 186

Side D Vertical Back of EUT Facing Phantom - Middle/Area Scan (61x111x1): Measurement grid: dx=12mm, dy=12mm
Maximum value of SAR (interpolated) = 0.243 mW/g
Side D Vertical Back of EUT Facing Phantom - Middle/Zoom Scan (7x7x7) (7x7x7)/Cube 0: Measurement grid: dx=5mm, dy=5mm, dz=5mm
Reference Value = 15.2 V/m; Power Drift = -0.058 dB
Peak SAR (extrapolated) = 0.320 W/kg
SAR(1 g) = 0.227 mW/g; SAR(10 g) = 0.157 mW/g
Maximum value of SAR (measured) = 0.246 mW/g

010: Side E Tip of EUT Facing Phantom LTE 14 10MHz BW 1 RB QPSK CH23330
Date: 04/04/2014
DUT: General Dynamics Broadband; Type: USB Dongle; Serial: APJHD06005222

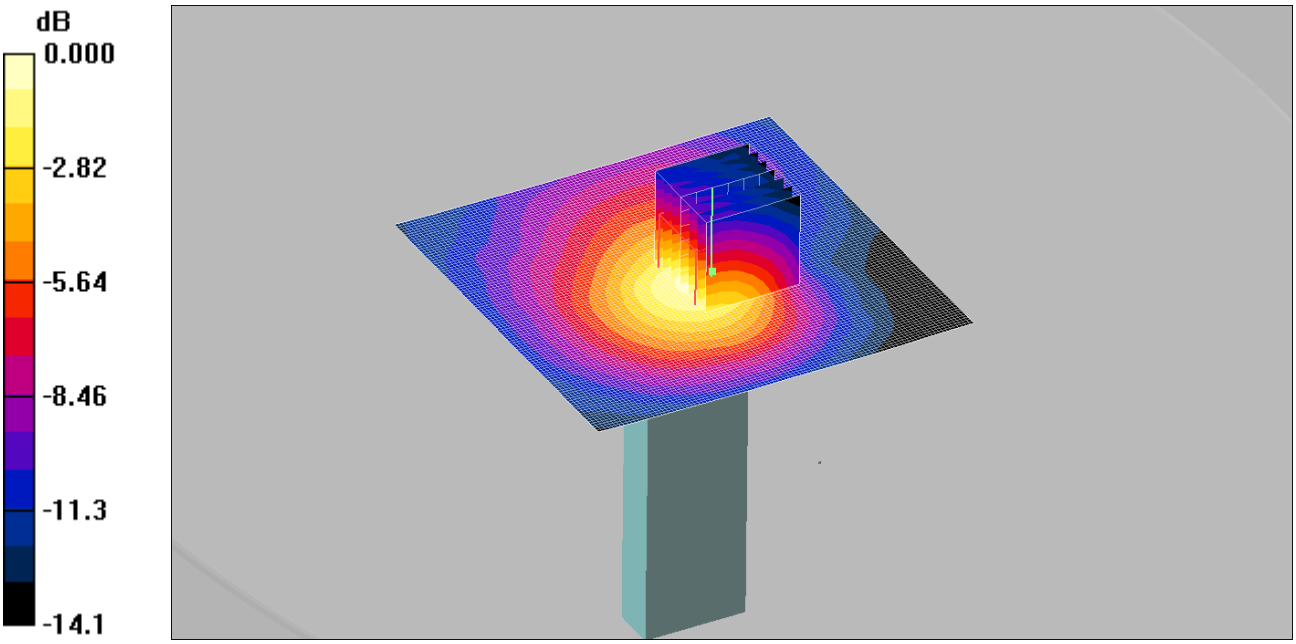

0 dB = 0.062mW/g

Communication System: LTE - Band 14 / 10MHz Channel; Frequency: 793 MHz;Duty Cycle: 1:1
Medium: 750 MHz MSL Medium parameters used (interpolated): f = 793 MHz; σ = 0.959 mho/m; ε_r = 52.9; ρ = 1000 kg/m^3
Phantom section: Flat Section
DASY4 Configuration:
- Probe: ES3DV3 - SN3335; ConvF(6.2, 6.2, 6.2);
- Sensor-Surface: 4mm (Mechanical Surface Detection)
- Electronics: DAE3 Sn450; Calibrated: 31/10/2013
- Phantom: ELI v5.0; Type: QDOVA002AA; Serial: TP: 1235
- Measurement SW: DASY4, V4.7 Build 80; Postprocessing SW: SEMCAD, V1.8 Build 186

Side E Tip of EUT Facing Phantom - Middle/Area Scan (101x101x1): Measurement grid: dx=12mm, dy=12mm
Maximum value of SAR (interpolated) = 0.068 mW/g

Side E Tip of EUT Facing Phantom - Middle/Zoom Scan (7x7x7) (7x7x7)/Cube 0: Measurement grid: dx=5mm, dy=5mm, dz=5mm
Reference Value = 7.30 V/m; Power Drift = 0.174 dB
Peak SAR (extrapolated) = 0.110 W/kg
SAR(1 g) = 0.056 mW/g; SAR(10 g) = 0.031 mW/g
Maximum value of SAR (measured) = 0.062 mW/g

011: Side E Tip of EUT Facing Phantom LTE 14 10MHz BW 50 % RB QPSK CH23330
Date: 04/04/2014
DUT: General Dynamics Broadband; Type: USB Dongle; Serial: APJHD06005222

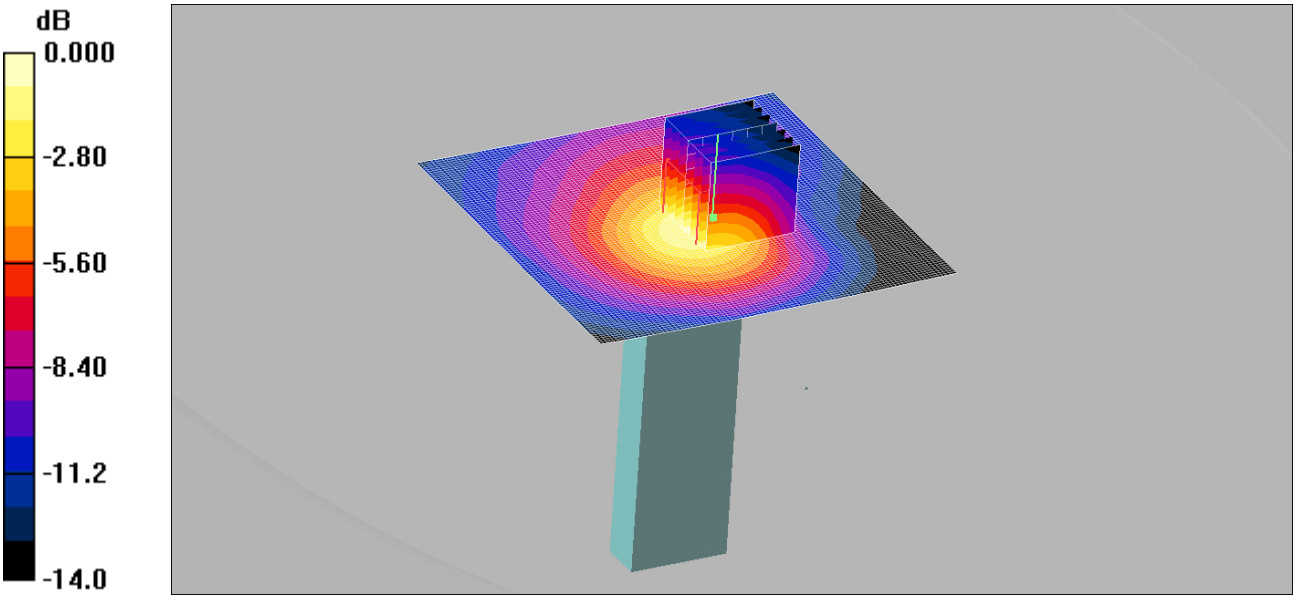

0 dB = 0.065mW/g

Communication System: LTE - Band 14 / 10MHz Channel; Frequency: 793 MHz;Duty Cycle: 1:1
Medium: 750 MHz MSL Medium parameters used (interpolated): f = 793 MHz; σ = 0.959 mho/m; ε_r = 52.9; ρ = 1000 kg/m^3
Phantom section: Flat Section
DASY4 Configuration:
- Probe: ES3DV3 - SN3335; ConvF(6.2, 6.2, 6.2);
- Sensor-Surface: 4mm (Mechanical Surface Detection)
- Electronics: DAE3 Sn450; Calibrated: 31/10/2013
- Phantom: ELI v5.0; Type: QDOVA002AA; Serial: TP: 1235
- Measurement SW: DASY4, V4.7 Build 80; Postprocessing SW: SEMCAD, V1.8 Build 186

Side E Tip of EUT Facing Phantom - Middle/Area Scan (101x101x1): Measurement grid: dx=12mm, dy=12mm
Maximum value of SAR (interpolated) = 0.069 mW/g
Side E Tip of EUT Facing Phantom - Middle/Zoom Scan (7x7x7) (7x7x7)/Cube 0: Measurement grid: dx=5mm, dy=5mm, dz=5mm
Reference Value = 7.64 V/m; Power Drift = 0.091 dB
Peak SAR (extrapolated) = 0.115 W/kg
SAR(1 g) = 0.059 mW/g; SAR(10 g) = 0.033 mW/g
Maximum value of SAR (measured) = 0.065 mW/g

012: Side A Horizontal Up of the Antenna Facing Phantom LTE 14 10MHz BW 1 RB QPSK CH23330
Date: 04/04/2014
DUT: General Dynamics Broadband; Type: Antenna; Serial: GT1229LT006170

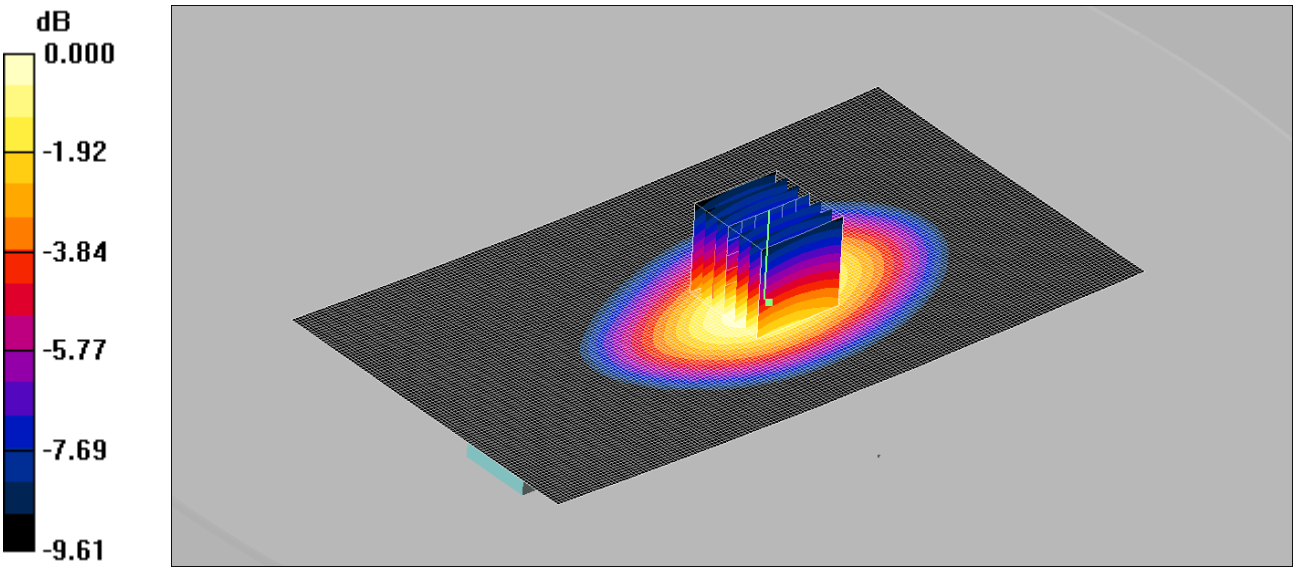

0 dB = 0.490mW/g

Communication System: LTE - Band 14 / 10MHz Channel; Frequency: 793 MHz;Duty Cycle: 1:1
Medium: 750 MHz MSL Medium parameters used (interpolated): f = 793 MHz; σ = 0.959 mho/m; ε_r = 52.9; ρ = 1000 kg/m^3
Phantom section: Flat Section
DASY4 Configuration:
- Probe: ES3DV3 - SN3335; ConvF(6.2, 6.2, 6.2);
- Sensor-Surface: 4mm (Mechanical Surface Detection)
- Electronics: DAE3 Sn450; Calibrated: 31/10/2013
- Phantom: ELI v5.0; Type: QDOVA002AA; Serial: TP: 1235
- Measurement SW: DASY4, V4.7 Build 80; Postprocessing SW: SEMCAD, V1.8 Build 186

Side A Horizontal Up of Antenna Facing Phantom - Middle/Area Scan (181x101x1): Measurement grid: dx=12mm, dy=12mm
Maximum value of SAR (interpolated) = 0.495 mW/g

Side A Horizontal Up of Antenna Facing Phantom - Middle/Zoom Scan (7x7x7) (7x7x7)/Cube 0:
Measurement grid: dx=5mm, dy=5mm, dz=5mm
Reference Value = 15.8 V/m; Power Drift = 0.090 dB
Peak SAR (extrapolated) = 0.632 W/kg
SAR(1 g) = 0.455 mW/g; SAR(10 g) = 0.312 mW/g
Maximum value of SAR (measured) = 0.490 mW/g

013: Side A Horizontal Up of the Antenna Facing Phantom LTE 14 10MHz BW 50 % RB QPSK CH23330
Date: 04/04/2014
DUT: General Dynamics Broadband; Type: Antenna; Serial: GT1229LT006170

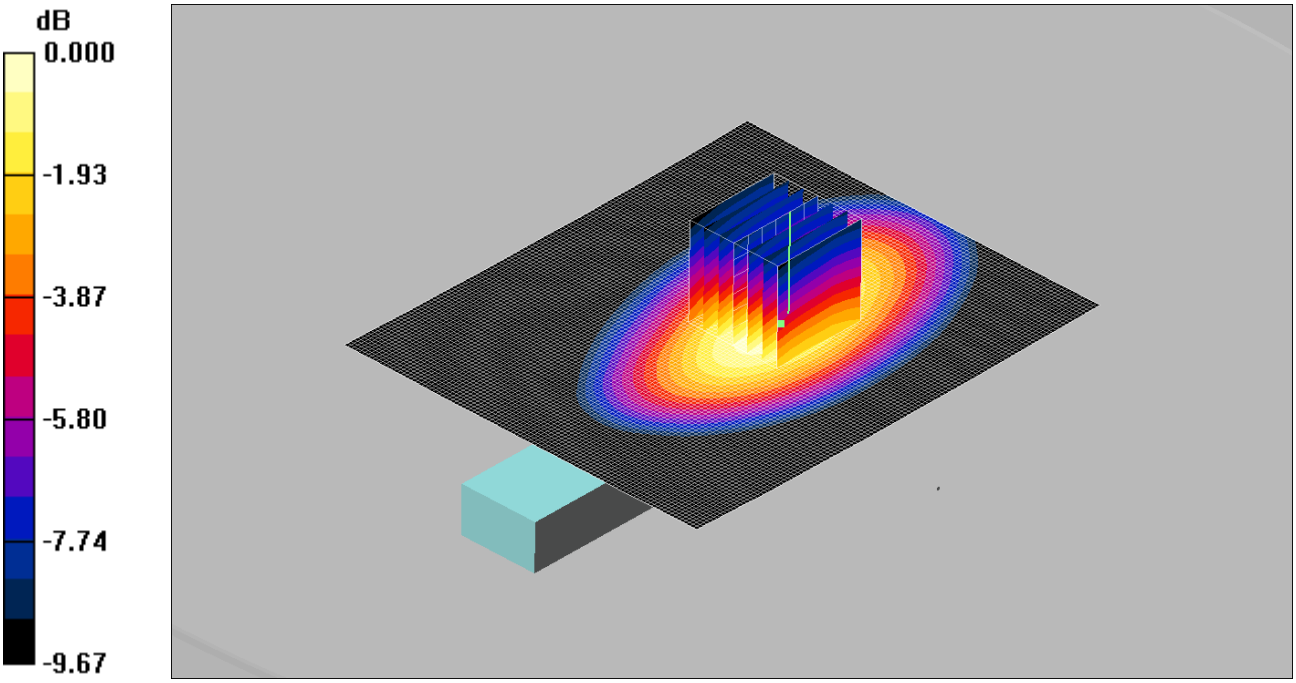

0 dB = 0.518mW/g

Communication System: LTE - Band 14 / 10MHz Channel; Frequency: 793 MHz;Duty Cycle: 1:1
Medium: 750 MHz MSL Medium parameters used (interpolated): f = 793 MHz; σ = 0.959 mho/m; ε_r = 52.9; ρ = 1000 kg/m^3
Phantom section: Flat Section
DASY4 Configuration:
- Probe: ES3DV3 - SN3335; ConvF(6.2, 6.2, 6.2);
- Sensor-Surface: 4mm (Mechanical Surface Detection)
- Electronics: DAE3 Sn450; Calibrated: 31/10/2013
- Phantom: ELI v5.0; Type: QDOVA002AA; Serial: TP: 1235
- Measurement SW: DASY4, V4.7 Build 80; Postprocessing SW: SEMCAD, V1.8 Build 186

Side A Horizontal Up of Antenna Facing Phantom - Middle/Area Scan (121x101x1): Measurement grid: dx=12mm, dy=12mm
Maximum value of SAR (interpolated) = 0.512 mW/g

Side A Horizontal Up of Antenna Facing Phantom - Middle/Zoom Scan (7x7x7) (7x7x7)/Cube 0:
Measurement grid: dx=5mm, dy=5mm, dz=5mm
Reference Value = 16.3 V/m; Power Drift = 0.076 dB
Peak SAR (extrapolated) = 0.666 W/kg
SAR(1 g) = 0.482 mW/g; SAR(10 g) = 0.331 mW/g
Maximum value of SAR (measured) = 0.518 mW/g

014: Side B Horizontal Down of the Antenna Facing Phantom LTE 14 10MHz BW 1 RB QPSK CH23330
Date: 04/04/2014
DUT: General Dynamics Broadband; Type: Antenna; Serial: GT1229LT006170

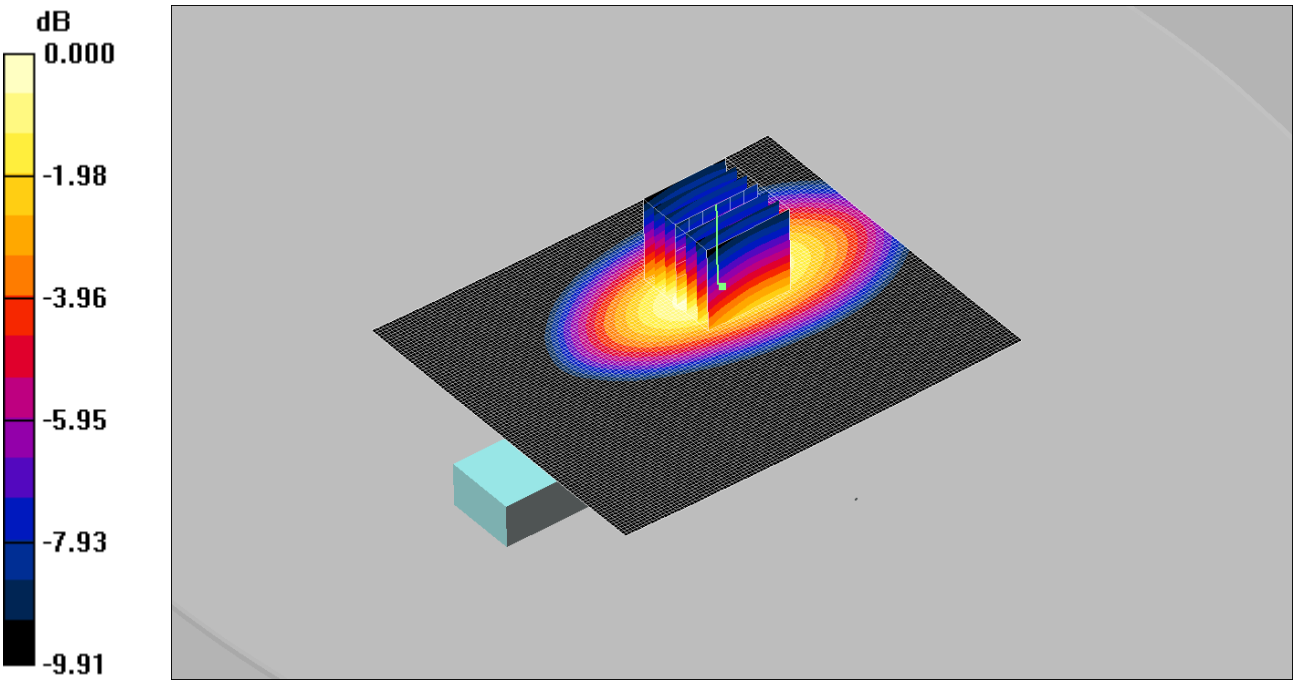

0 dB = 0.672mW/g

Communication System: LTE - Band 14 / 10MHz Channel; Frequency: 793 MHz;Duty Cycle: 1:1
Medium: 750 MHz MSL Medium parameters used (interpolated): f = 793 MHz; σ = 0.959 mho/m; ε_r = 52.9; ρ = 1000 kg/m^3
Phantom section: Flat Section
DASY4 Configuration:
- Probe: ES3DV3 - SN3335; ConvF(6.2, 6.2, 6.2);
- Sensor-Surface: 4mm (Mechanical Surface Detection)
- Electronics: DAE3 Sn450; Calibrated: 31/10/2013
- Phantom: ELI v5.0; Type: QDOVA002AA; Serial: TP: 1235
- Measurement SW: DASY4, V4.7 Build 80; Postprocessing SW: SEMCAD, V1.8 Build 186

Side B Horizontal Down of Antenna Facing Phantom - Middle/Area Scan (121x101x1): Measurement grid: dx=12mm, dy=12mm
Maximum value of SAR (interpolated) = 0.676 mW/g
Side B Horizontal Down of Antenna Facing Phantom - Middle/Zoom Scan (7x7x7) (7x7x7)/Cube 0:
Measurement grid: dx=5mm, dy=5mm, dz=5mm
Reference Value = 23.6 V/m; Power Drift = 0.114 dB
Peak SAR (extrapolated) = 0.879 W/kg
SAR(1 g) = 0.620 mW/g; SAR(10 g) = 0.417 mW/g
Maximum value of SAR (measured) = 0.672 mW/g

015: Side B Horizontal Down of the Antenna Facing Phantom LTE 14 10MHz BW 50 % RB QPSK CH23330
Date: 07/04/2014
DUT: General Dynamics Broadband; Type: Antenna; Serial: GT1229LT006170

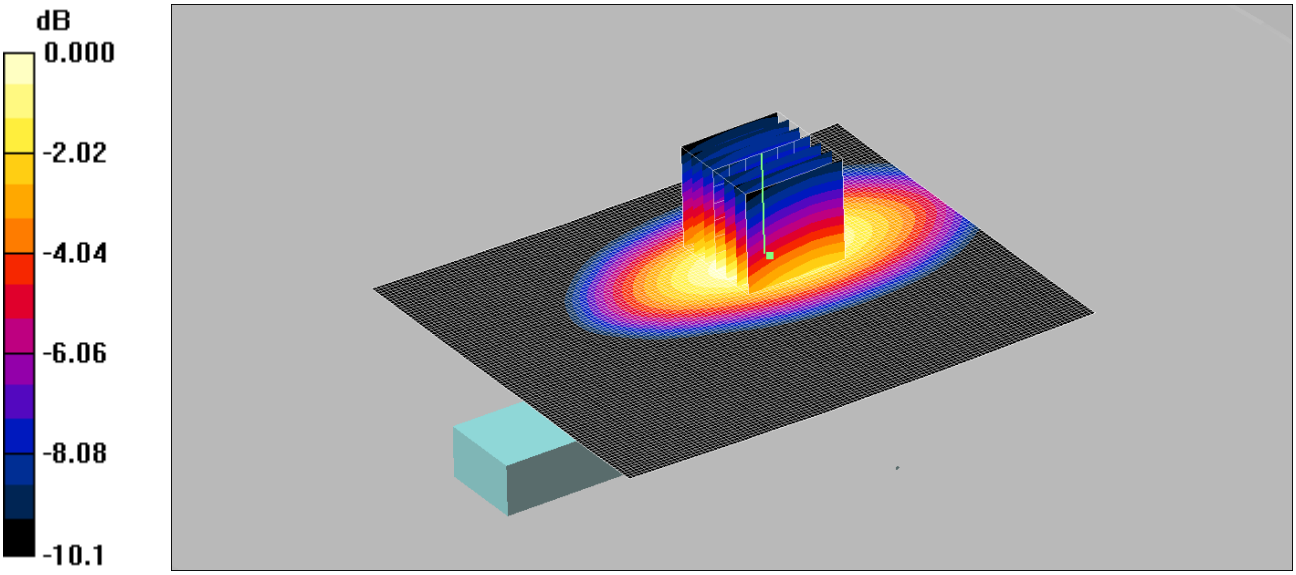

0 dB = 0.709mW/g

Communication System: LTE - Band 14 / 10MHz Channel; Frequency: 793 MHz;Duty Cycle: 1:1
Medium: 750 MHz MSL Medium parameters used (interpolated): f = 793 MHz; σ = 0.985 mho/m; ε_r = 54.2; ρ = 1000 kg/m^3
Phantom section: Flat Section
DASY4 Configuration:
- Probe: ES3DV3 - SN3335; ConvF(6.2, 6.2, 6.2);
- Sensor-Surface: 4mm (Mechanical Surface Detection)
- Electronics: DAE3 Sn450; Calibrated: 31/10/2013
- Phantom: ELI v5.0; Type: QDOVA002AA; Serial: TP: 1235
- Measurement SW: DASY4, V4.7 Build 80; Postprocessing SW: SEMCAD, V1.8 Build 186

Side B Horizontal Down of Antenna Facing Phantom - Middle/Area Scan (121x101x1): Measurement grid: dx=12mm, dy=12mm
Maximum value of SAR (interpolated) = 0.739 mW/g

Side B Horizontal Down of Antenna Facing Phantom - Middle/Zoom Scan (7x7x7) (7x7x7)/Cube 0:
Measurement grid: dx=5mm, dy=5mm, dz=5mm
Reference Value = 23.8 V/m; Power Drift = -0.034 dB
Peak SAR (extrapolated) = 0.937 W/kg
SAR(1 g) = 0.660 mW/g; SAR(10 g) = 0.440 mW/g
Maximum value of SAR (measured) = 0.709 mW/g

016: Side B Horizontal Down of the Antenna Facing Phantom LTE 14 10MHz BW 100 % RB QPSK CH23330
Date: 07/04/2014
DUT: General Dynamics Broadband; Type: Antenna; Serial: GT1229LT006170

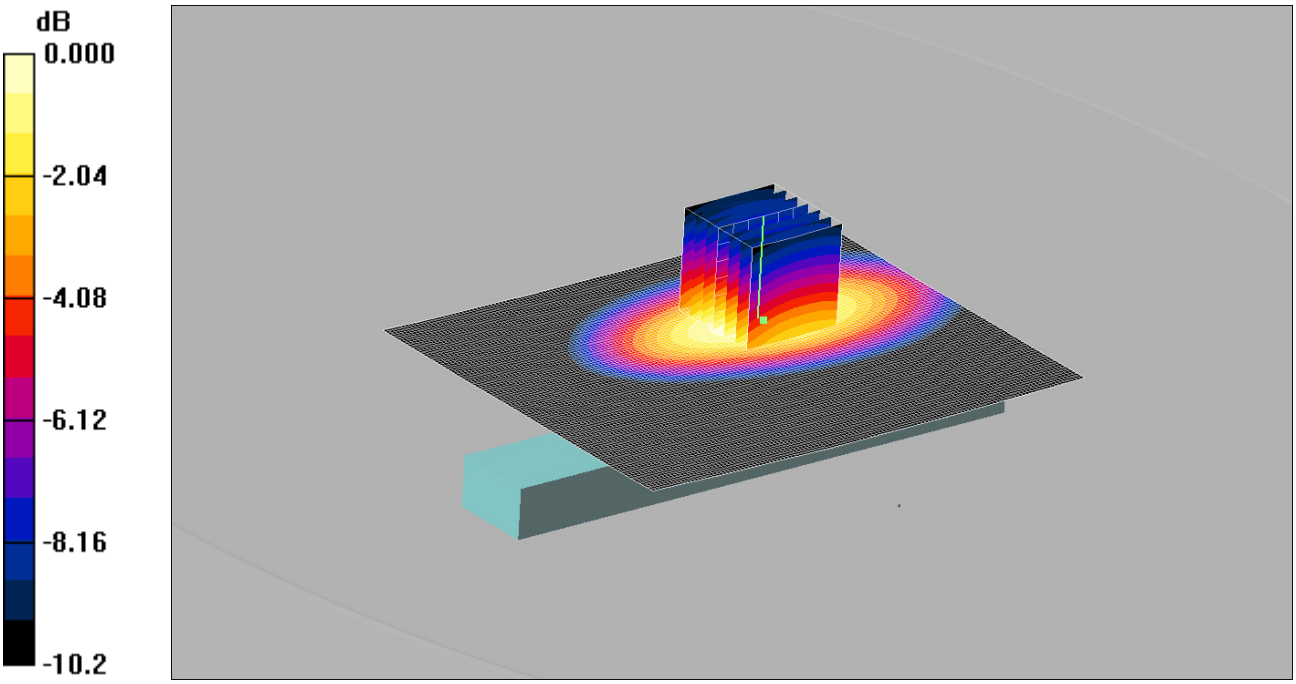

0 dB = 0.769mW/g

Communication System: LTE - Band 14 / 10MHz Channel; Frequency: 793 MHz;Duty Cycle: 1:1
Medium: 750 MHz MSL Medium parameters used (interpolated): f = 793 MHz; σ = 0.985 mho/m; ε_r = 54.2; ρ = 1000 kg/m^3
Phantom section: Flat Section
DASY4 Configuration:
- Probe: ES3DV3 - SN3335; ConvF(6.2, 6.2, 6.2);
- Sensor-Surface: 4mm (Mechanical Surface Detection)
- Electronics: DAE3 Sn450; Calibrated: 31/10/2013
- Phantom: ELI v5.0; Type: QDOVA002AA; Serial: TP: 1235
- Measurement SW: DASY4, V4.7 Build 80; Postprocessing SW: SEMCAD, V1.8 Build 186

Side B Horizontal Down of Antenna Facing Phantom - Middle/Area Scan (121x101x1): Measurement grid: dx=12mm, dy=12mm
Maximum value of SAR (interpolated) = 0.769 mW/g

Side B Horizontal Down of Antenna Facing Phantom - Middle/Zoom Scan (7x7x7) (7x7x7)/Cube 0:
Measurement grid: dx=5mm, dy=5mm, dz=5mm
Reference Value = 24.2 V/m; Power Drift = 0.026 dB
Peak SAR (extrapolated) = 1.02 W/kg
SAR(1 g) = 0.715 mW/g; SAR(10 g) = 0.475 mW/g
Maximum value of SAR (measured) = 0.769 mW/g

017: Side C Vertical Front of the Antenna Facing Phantom LTE 14 10MHz BW 1 RB QPSK CH23330
Date: 07/04/2014
DUT: General Dynamics Broadband; Type: Antenna; Serial: GT1229LT006170

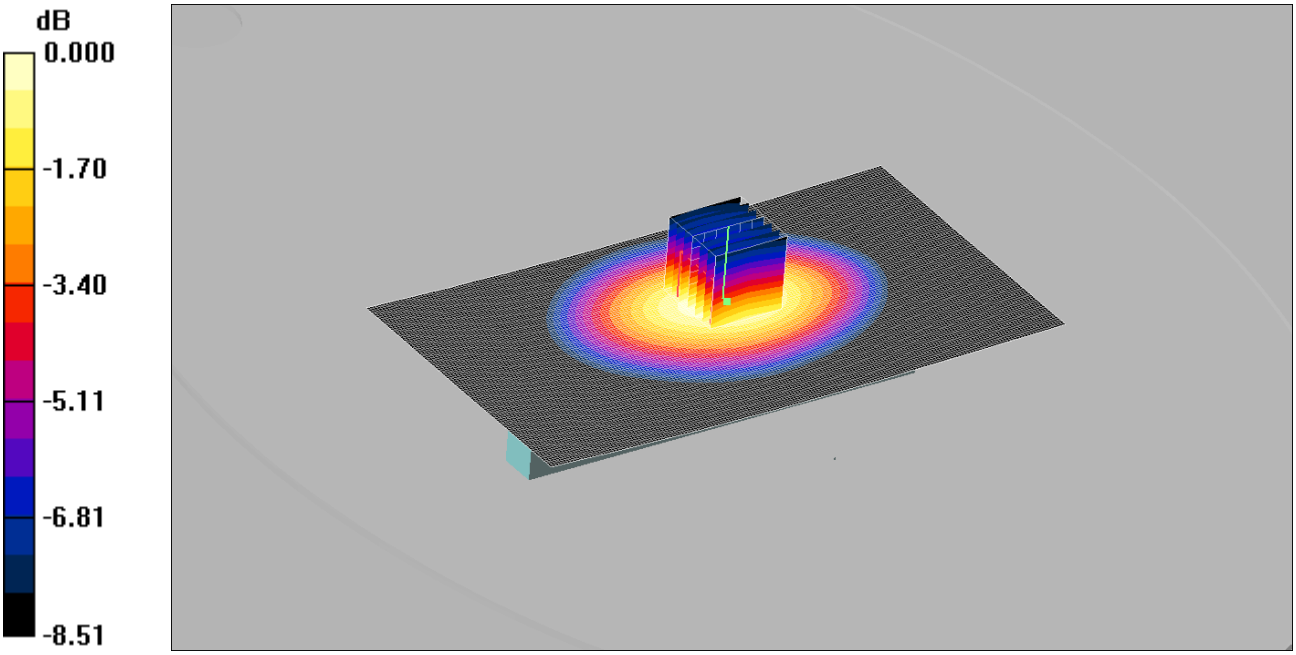

0 dB = 0.254mW/g

Communication System: LTE - Band 14 / 10MHz Channel; Frequency: 793 MHz;Duty Cycle: 1:1
Medium: 750 MHz MSL Medium parameters used (interpolated): f = 793 MHz; σ = 0.985 mho/m; ε_r = 54.2; ρ = 1000 kg/m^3
Phantom section: Flat Section
DASY4 Configuration:
- Probe: ES3DV3 - SN3335; ConvF(6.2, 6.2, 6.2);
- Sensor-Surface: 4mm (Mechanical Surface Detection)
- Electronics: DAE3 Sn450; Calibrated: 31/10/2013
- Phantom: ELI v5.0; Type: QDOVA002AA; Serial: TP: 1235
- Measurement SW: DASY4, V4.7 Build 80; Postprocessing SW: SEMCAD, V1.8 Build 186

Side C Vertical Up of Antenna Facing Phantom - Middle/Area Scan (181x101x1): Measurement grid: dx=12mm, dy=12mm
Maximum value of SAR (interpolated) = 0.256 mW/g

Side C Vertical Up of Antenna Facing Phantom - Middle/Zoom Scan (7x7x7) (7x7x7)/Cube 0: Measurement grid: dx=5mm, dy=5mm, dz=5mm
Reference Value = 15.6 V/m; Power Drift = 0.010 dB
Peak SAR (extrapolated) = 0.311 W/kg
SAR(1 g) = 0.240 mW/g; SAR(10 g) = 0.173 mW/g
Maximum value of SAR (measured) = 0.254 mW/g

018: Side C Vertical Front of the Antenna Facing Phantom LTE 14 10MHz BW 50 % RB QPSK CH23330
Date: 07/04/2014
DUT: General Dynamics Broadband; Type: Antenna; Serial: GT1229LT006170

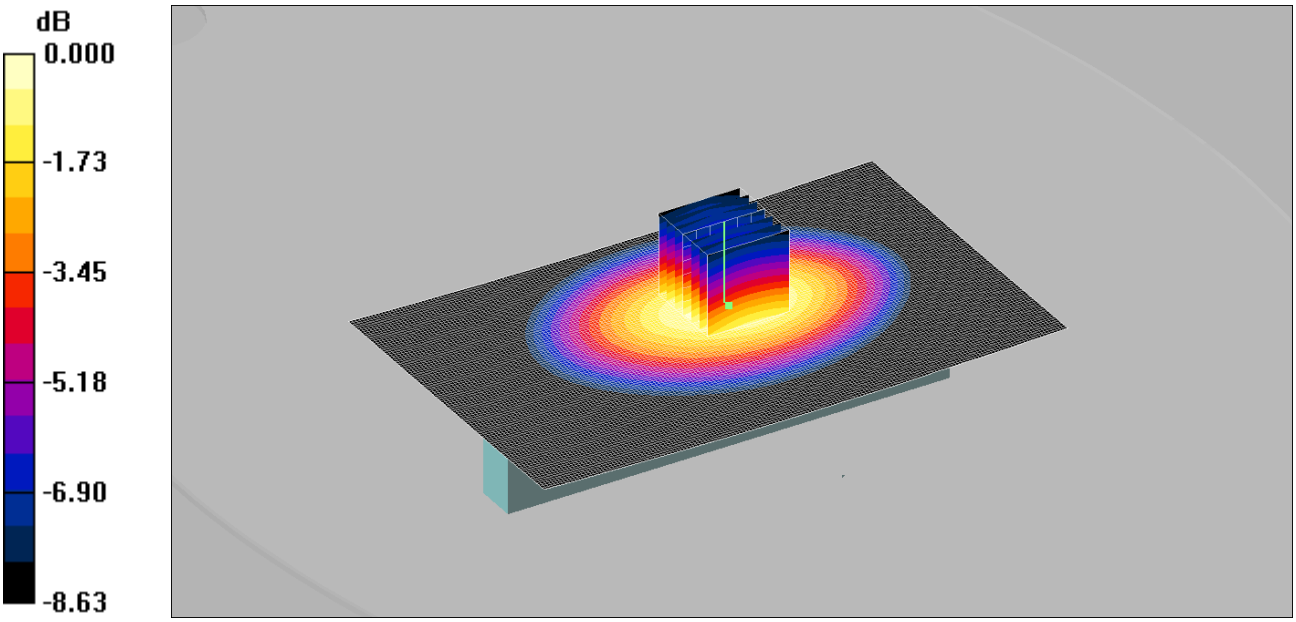

0 dB = 0.276mW/g

Communication System: LTE - Band 14 / 10MHz Channel; Frequency: 793 MHz;Duty Cycle: 1:1
Medium: 750 MHz MSL Medium parameters used (interpolated): f = 793 MHz; σ = 0.985 mho/m; ε_r = 54.2; ρ = 1000 kg/m^3
Phantom section: Flat Section
DASY4 Configuration:
- Probe: ES3DV3 - SN3335; ConvF(6.2, 6.2, 6.2);
- Sensor-Surface: 4mm (Mechanical Surface Detection)
- Electronics: DAE3 Sn450; Calibrated: 31/10/2013
- Phantom: ELI v5.0; Type: QDOVA002AA; Serial: TP: 1235
- Measurement SW: DASY4, V4.7 Build 80; Postprocessing SW: SEMCAD, V1.8 Build 186

Side C Vertical Front of Antenna Facing Phantom - Middle/Area Scan (161x101x1): Measurement grid: dx=12mm, dy=12mm
Maximum value of SAR (interpolated) = 0.272 mW/g

Side C Vertical Front of Antenna Facing Phantom - Middle/Zoom Scan (7x7x7) (7x7x7)/Cube 0:
Measurement grid: dx=5mm, dy=5mm, dz=5mm
Reference Value = 16.5 V/m; Power Drift = 0.004 dB
Peak SAR (extrapolated) = 0.337 W/kg
SAR(1 g) = 0.257 mW/g; SAR(10 g) = 0.184 mW/g
Maximum value of SAR (measured) = 0.276 mW/g

019: Side D Vertical Back of the Antenna Facing Phantom LTE 14 10MHz BW 1 RB QPSK CH23330
Date: 07/04/2014
DUT: General Dynamics Broadband; Type: Antenna; Serial: GT1229LT006170

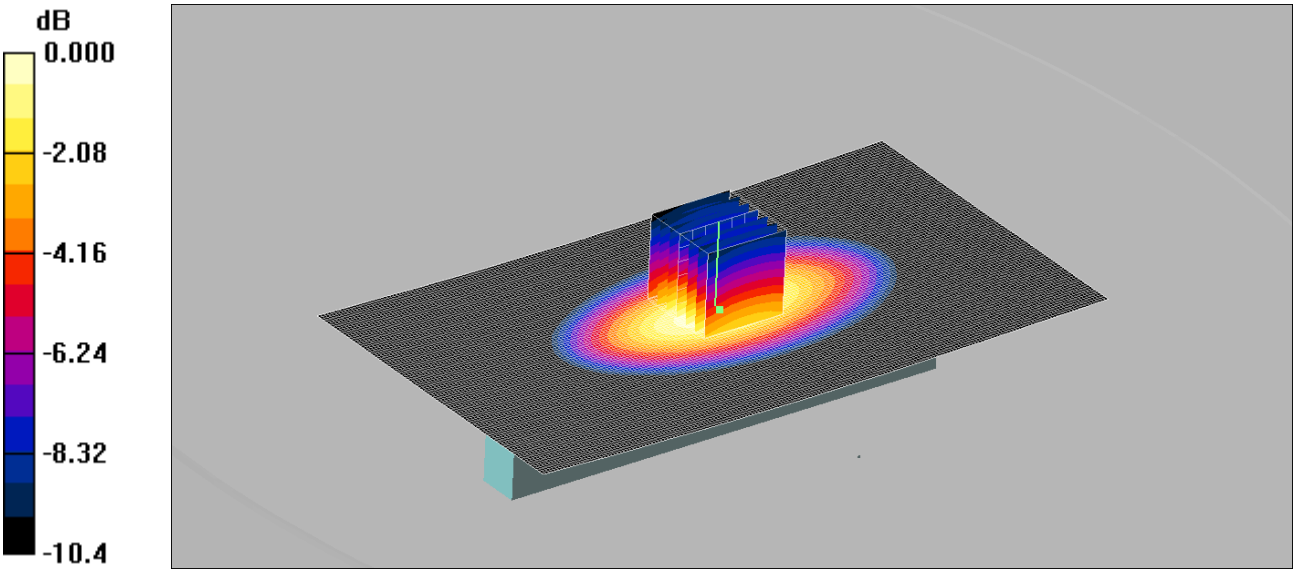

0 dB = 0.695mW/g

Communication System: LTE - Band 14 / 10MHz Channel; Frequency: 793 MHz;Duty Cycle: 1:1
Medium: 750 MHz MSL Medium parameters used (interpolated): f = 793 MHz; σ = 0.985 mho/m; ε_r = 54.2; ρ = 1000 kg/m^3
Phantom section: Flat Section
DASY4 Configuration:
- Probe: ES3DV3 - SN3335; ConvF(6.2, 6.2, 6.2);
- Sensor-Surface: 4mm (Mechanical Surface Detection)
- Electronics: DAE3 Sn450; Calibrated: 31/10/2013
- Phantom: ELI v5.0; Type: QDOVA002AA; Serial: TP: 1235
- Measurement SW: DASY4, V4.7 Build 80; Postprocessing SW: SEMCAD, V1.8 Build 186

Side D Vertical Back of Antenna Facing Phantom - Middle/Area Scan (181x101x1): Measurement grid: dx=12mm, dy=12mm
Maximum value of SAR (interpolated) = 0.692 mW/g
Side D Vertical Back of Antenna Facing Phantom - Middle/Zoom Scan (7x7x7) (7x7x7)/Cube 0:
Measurement grid: dx=5mm, dy=5mm, dz=5mm
Reference Value = 26.3 V/m; Power Drift = 0.007 dB
Peak SAR (extrapolated) = 0.925 W/kg
SAR(1 g) = 0.646 mW/g; SAR(10 g) = 0.427 mW/g
Maximum value of SAR (measured) = 0.695 mW/g

020: Side D Vertical Back of the Antenna Facing Phantom LTE 14 10MHz BW 50 % RB QPSK CH23330
Date: 07/04/2014
DUT: General Dynamics Broadband; Type: Antenna; Serial: GT1229LT006170

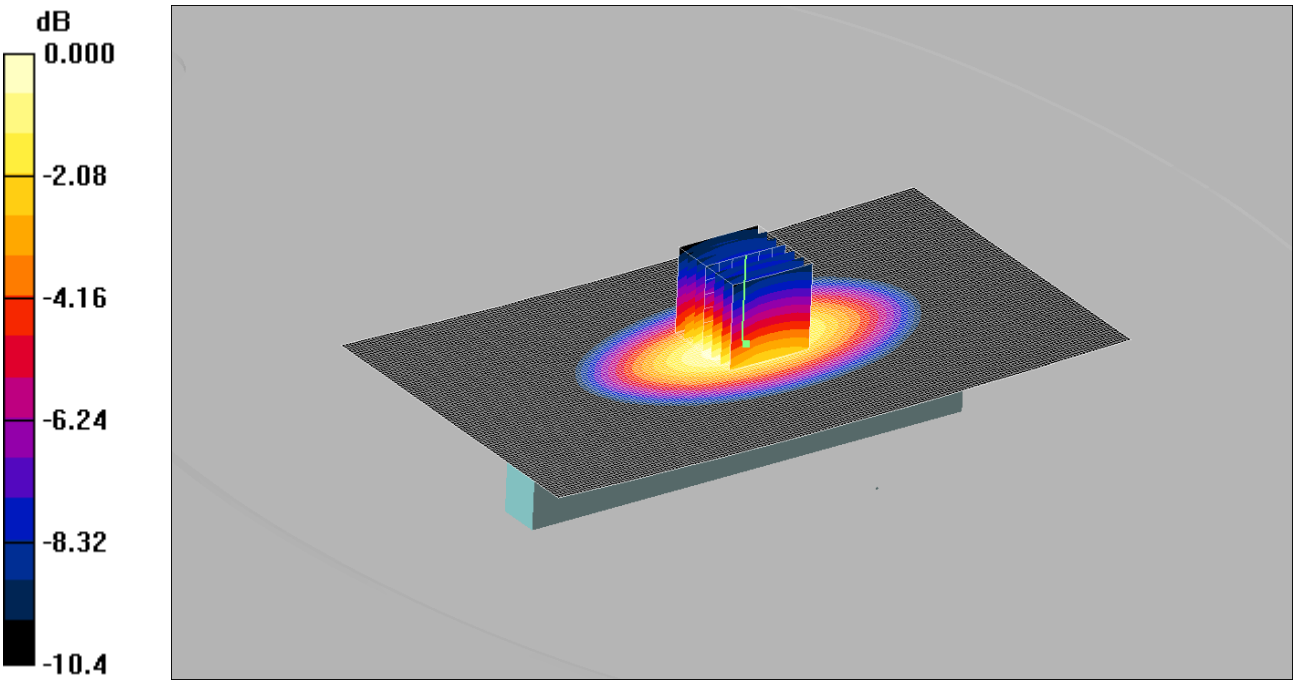

0 dB = 0.728mW/g

Communication System: LTE - Band 14 / 10MHz Channel; Frequency: 793 MHz;Duty Cycle: 1:1
Medium: 750 MHz MSL Medium parameters used (interpolated): f = 793 MHz; σ = 0.985 mho/m; ε_r = 54.2; ρ = 1000 kg/m^3
Phantom section: Flat Section
DASY4 Configuration:
- Probe: ES3DV3 - SN3335; ConvF(6.2, 6.2, 6.2);
- Sensor-Surface: 4mm (Mechanical Surface Detection)
- Electronics: DAE3 Sn450; Calibrated: 31/10/2013
- Phantom: ELI v5.0; Type: QDOVA002AA; Serial: TP: 1235
- Measurement SW: DASY4, V4.7 Build 80; Postprocessing SW: SEMCAD, V1.8 Build 186

Side D Vertical Back of Antenna Facing Phantom - Middle/Area Scan (181x101x1): Measurement grid: dx=12mm, dy=12mm
Maximum value of SAR (interpolated) = 0.718 mW/g

Side D Vertical Back of Antenna Facing Phantom - Middle/Zoom Scan (7x7x7) (7x7x7)/Cube 0:
Measurement grid: dx=5mm, dy=5mm, dz=5mm
Reference Value = 27.5 V/m; Power Drift = 0.028 dB
Peak SAR (extrapolated) = 0.970 W/kg
SAR(1 g) = 0.677 mW/g; SAR(10 g) = 0.446 mW/g
Maximum value of SAR (measured) = 0.728 mW/g

021: Side D Vertical Back of the Antenna Facing Phantom LTE 14 10MHz BW 100 % RB QPSK CH23330
Date: 07/04/2014
DUT: General Dynamics Broadband; Type: Antenna; Serial: GT1229LT006170

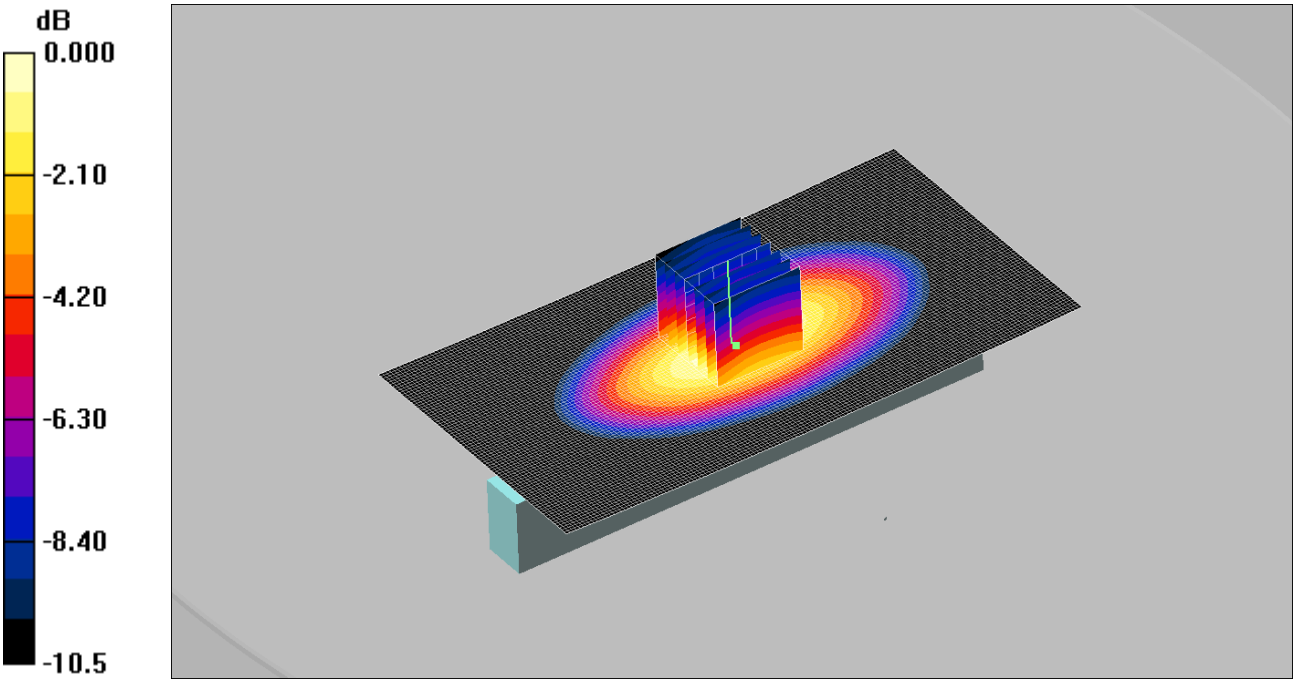

0 dB = 0.747mW/g

Communication System: LTE - Band 14 / 10MHz Channel; Frequency: 793 MHz;Duty Cycle: 1:1
Medium: 750 MHz MSL Medium parameters used (interpolated): f = 793 MHz; σ = 0.985 mho/m; ε_r = 54.2; ρ = 1000 kg/m^3
Phantom section: Flat Section
DASY4 Configuration:
- Probe: ES3DV3 - SN3335; ConvF(6.2, 6.2, 6.2);
- Sensor-Surface: 4mm (Mechanical Surface Detection)
- Electronics: DAE3 Sn450; Calibrated: 31/10/2013
- Phantom: ELI v5.0; Type: QDOVA002AA; Serial: TP: 1235
- Measurement SW: DASY4, V4.7 Build 80; Postprocessing SW: SEMCAD, V1.8 Build 186

Side D Vertical Back of Antenna Facing Phantom - Middle/Area Scan (151x81x1): Measurement grid: dx=12mm, dy=12mm
Maximum value of SAR (interpolated) = 0.719 mW/g

Side D Vertical Back of Antenna Facing Phantom - Middle/Zoom Scan (7x7x7) (7x7x7)/Cube 0:
Measurement grid: dx=5mm, dy=5mm, dz=5mm
Reference Value = 27.2 V/m; Power Drift = 0.028 dB
Peak SAR (extrapolated) = 0.990 W/kg
SAR(1 g) = 0.684 mW/g; SAR(10 g) = 0.449 mW/g
Maximum value of SAR (measured) = 0.747 mW/g

022: Side E Tip of the Antenna Facing Phantom LTE 14 10MHz BW 1 RB QPSK CH23330
Date: 07/04/2014
DUT: General Dynamics Broadband; Type: Antenna; Serial: GT1229LT006170

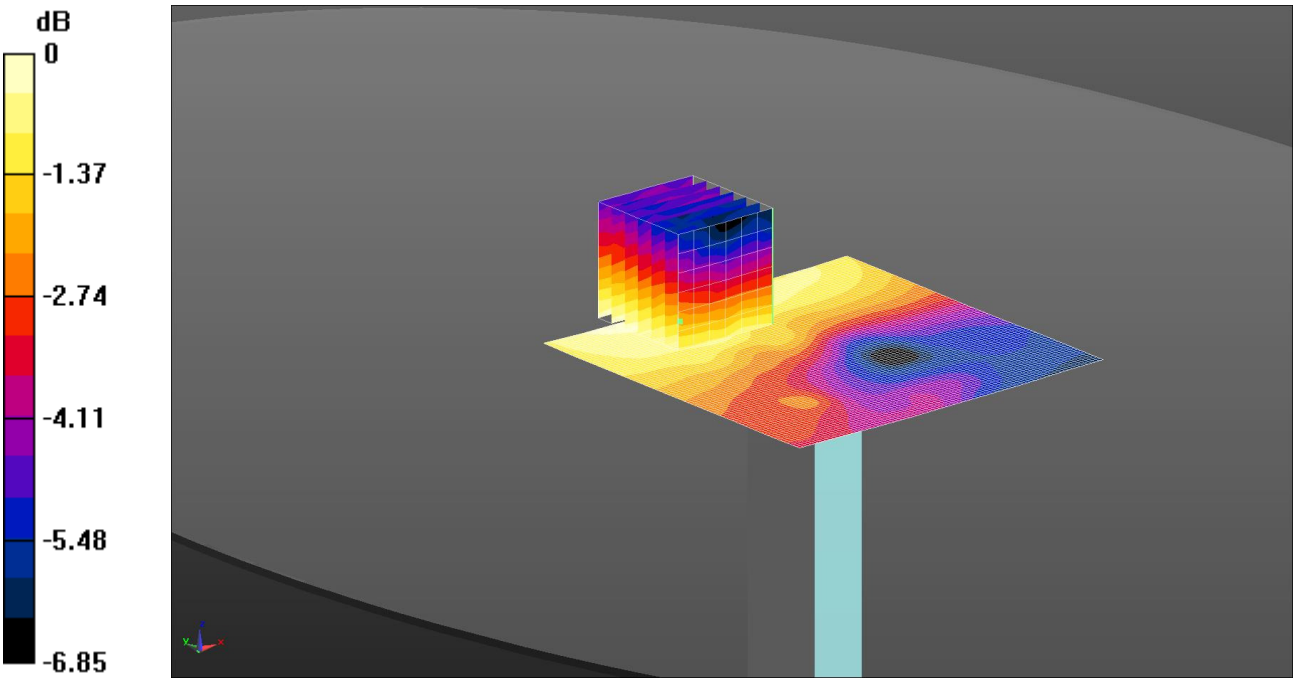

0 dB = 0.0143 W/kg = -18.46 dBW/kg

Communication System: UID 0, LTE - Band 14 / 10MHz Channel; Frequency: 793 MHz;Duty Cycle: 1:1
Medium: 750 MHz MSL Medium parameters used (interpolated): f = 793 MHz; σ = 0.985 S/m; εr = 54.229; ρ = 1000 kg/m3
Phantom section: Flat Section
DASY4 Configuration:
- Probe: ES3DV3 - SN3335; ConvF(6.2, 6.2, 6.2); Calibrated: 08/01/2014;
- Sensor-Surface: 4mm (Mechanical Surface Detection)
- Electronics: DAE3 Sn450; Calibrated: 31/10/2013
- Phantom: ELI v5.0; Type: QDOVA002AA; Serial: TP: 1235
- ; SEMCAD X Version 14.6.10 (7164)

Configuration/Side E Tip of Antenna Facing Phantom - Middle/Area Scan (81x81x1): Interpolated grid: dx=1.200 mm, dy=1.200 mm
Maximum value of SAR (interpolated) = 0.0143 W/kg
Configuration/Side E Tip of Antenna Facing Phantom - Middle/Zoom Scan (7x7x7) (7x7x7)/Cube 0: Measurement grid: dx=5mm, dy=5mm, dz=5mm
Reference Value = 2.726 V/m; Power Drift = 0.14 dB
Peak SAR (extrapolated) = 0.0180 W/kg
SAR(1 g) = 0.014 W/kg; SAR(10 g) = 0.010 W/kg
Maximum value of SAR (measured) = 0.0146 W/kg

Note: SAR level measured is very low as equivalent to noise floor.

023: Side E Tip of the Antenna Facing Phantom LTE 14 10MHz BW 50 % RB QPSK CH23330
Date: 07/04/2014
DUT: General Dynamics Broadband; Type: Antenna; Serial: GT1229LT006170

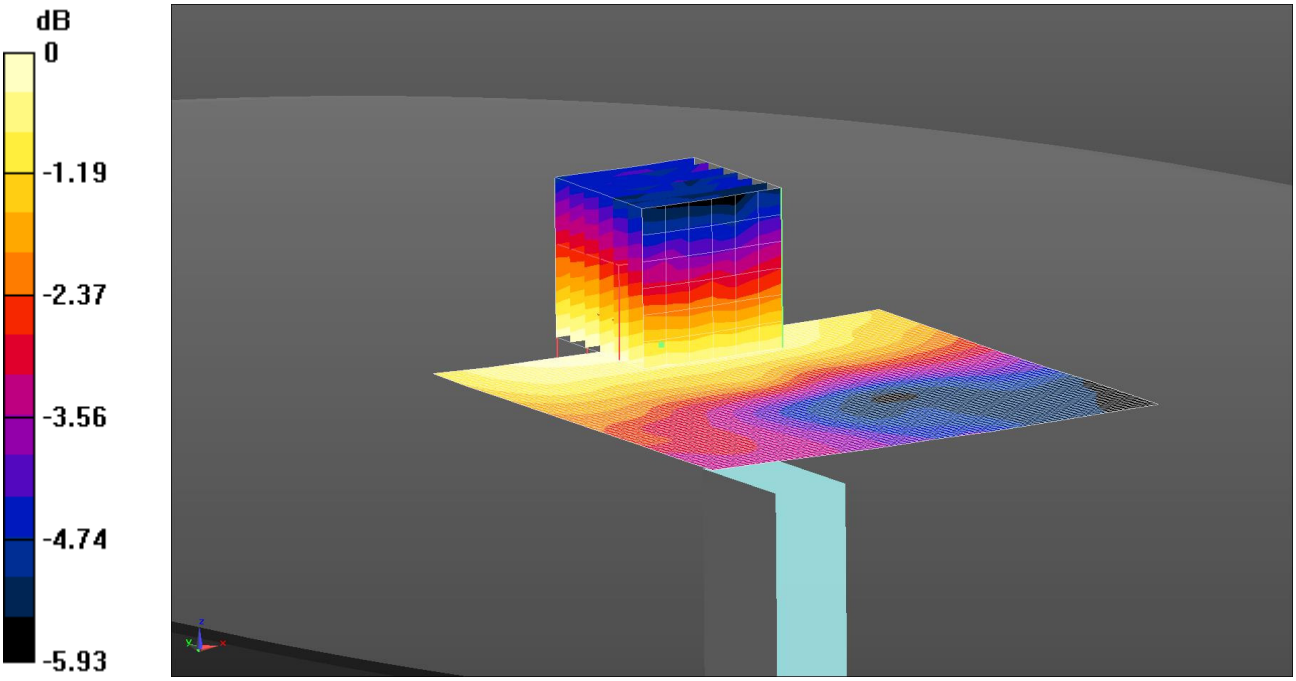

0 dB = 0.0147 W/kg = -18.31 dBW/kg

Communication System: UID 0, LTE - Band 14 / 10MHz Channel; Frequency: 793 MHz;Duty Cycle: 1:1
Medium: 750 MHz MSL Medium parameters used (interpolated): f = 793 MHz; σ = 0.985 S/m; εr = 54.229; ρ = 1000 kg/m3
Phantom section: Flat Section
DASY4 Configuration:
- Probe: ES3DV3 - SN3335; ConvF(6.2, 6.2, 6.2); Calibrated: 08/01/2014;
- Sensor-Surface: 4mm (Mechanical Surface Detection)
- Electronics: DAE3 Sn450; Calibrated: 31/10/2013
- Phantom: ELI v5.0; Type: QDOVA002AA; Serial: TP: 1235
- ; SEMCAD X Version 14.6.10 (7164)

Configuration/Side E Tip of Antenna Facing Phantom - Middle/Area Scan (81x81x1): Interpolated grid: dx=1.200 mm, dy=1.200 mm
Maximum value of SAR (interpolated) = 0.0147 W/kg
Configuration/Side E Tip of Antenna Facing Phantom - Middle/Zoom Scan (7x7x7) (7x7x7)/Cube 0: Measurement grid: dx=5mm, dy=5mm, dz=5mm
Reference Value = 2.765 V/m; Power Drift = 0.05 dB
Peak SAR (extrapolated) = 0.0180 W/kg
SAR(1 g) = 0.014 W/kg; SAR(10 g) = 0.011 W/kg
Maximum value of SAR (measured) = 0.0145 W/kg

Note: SAR level measured is very low as equivalent to noise floor.

024: System Performance Check 750MHz Body 03 04 14
Date: 03/04/2014
DUT: Dipole 750 MHz; Type: D750V3; Serial: D750V3 - SN:1011

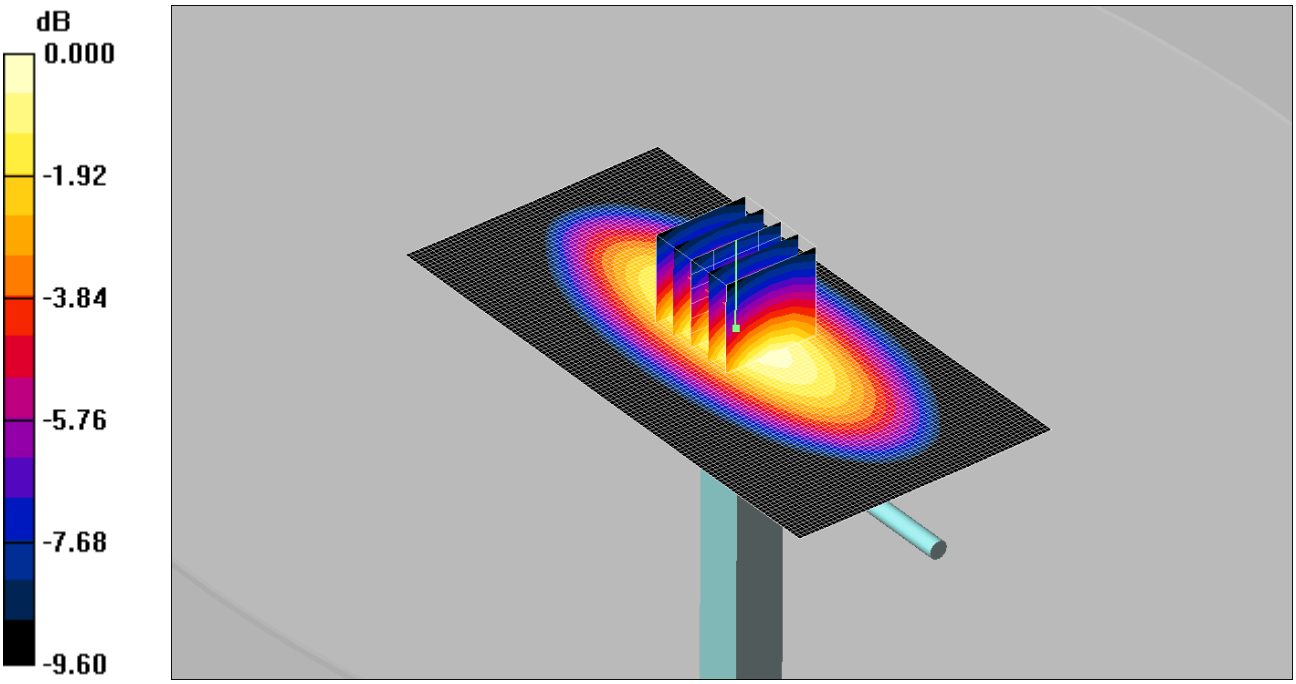

0 dB = 2.41mW/g

Communication System: CW; Frequency: 750 MHz;Duty Cycle: 1:1
Medium: 750 MHz MSL Medium parameters used: f = 750 MHz; σ = 0.934 mho/m; ε_r = 53.4; ρ = 1000 kg/m^3
Phantom section: Flat Section
DASY4 Configuration:
- Probe: ES3DV3 - SN3335; ConvF(6.2, 6.2, 6.2);
- Sensor-Surface: 4mm (Mechanical Surface Detection)
- Electronics: DAE3 Sn450; Calibrated: 31/10/2013
- Phantom: ELI v5.0; Type: QDOVA002AA; Serial: TP: 1235
- Measurement SW: DASY4, V4.7 Build 80; Postprocessing SW: SEMCAD, V1.8 Build 186

d=15mm, Pin=250mW 2/Area Scan (61x121x1): Measurement grid: dx=15mm, dy=15mm
Maximum value of SAR (interpolated) = 2.39 mW/g
d=15mm, Pin=250mW 2/Zoom Scan (5x5x7) (5x5x7)/Cube 0: Measurement grid: dx=8mm, dy=8mm, dz=5mm
Reference Value = 51.6 V/m; Power Drift = 0.053 dB
Peak SAR (extrapolated) = 3.16 W/kg
SAR(1 g) = 2.24 mW/g; SAR(10 g) = 1.51 mW/g
Maximum value of SAR (measured) = 2.41 mW/g

025: System Performance Check 750MHz Body 04 04 14
Date: 04/04/2014
DUT: Dipole 750 MHz; Type: D750V3; Serial: D750V3 - SN:1011

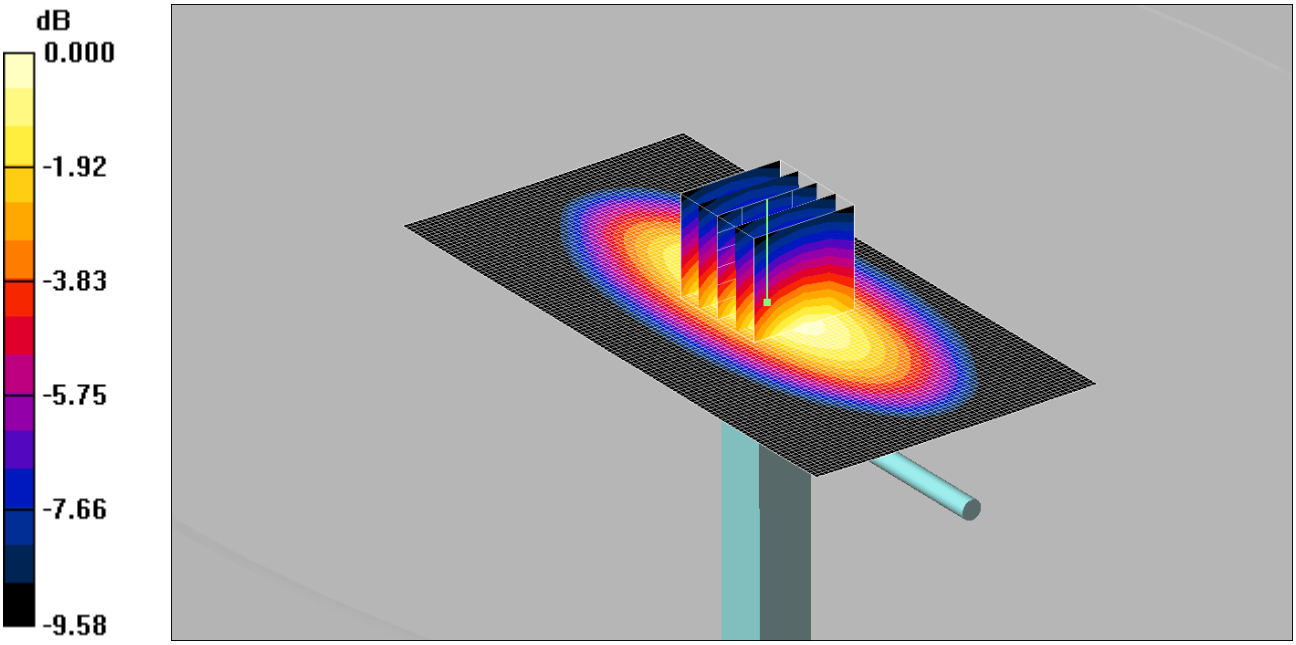

0 dB = 2.36mW/g

Communication System: CW; Frequency: 750 MHz;Duty Cycle: 1:1
Medium: 750 MHz MSL Medium parameters used: f = 750 MHz; σ = 0.934 mho/m; ε_r = 53.4; ρ = 1000 kg/m^3
Phantom section: Flat Section
DASY4 Configuration:
- Probe: ES3DV3 - SN3335; ConvF(6.2, 6.2, 6.2);
- Sensor-Surface: 4mm (Mechanical Surface Detection)
- Electronics: DAE3 Sn450; Calibrated: 31/10/2013
- Phantom: ELI v5.0; Type: QDOVA002AA; Serial: TP: 1235
- Measurement SW: DASY4, V4.7 Build 80; Postprocessing SW: SEMCAD, V1.8 Build 186

d=15mm, Pin=250mW 2/Area Scan (61x121x1): Measurement grid: dx=15mm, dy=15mm
Maximum value of SAR (interpolated) = 2.34 mW/g
d=15mm, Pin=250mW 2/Zoom Scan (5x5x7) (5x5x7)/Cube 0: Measurement grid: dx=8mm, dy=8mm, dz=5mm
Reference Value = 51.6 V/m; Power Drift = -0.038 dB
Peak SAR (extrapolated) = 3.08 W/kg
SAR(1 g) = 2.18 mW/g; SAR(10 g) = 1.47 mW/g
Maximum value of SAR (measured) = 2.36 mW/g

026: System Performance Check 750MHz Body 07 04 14
Date: 07/04/2014
DUT: Dipole 750 MHz; Type: D750V3; Serial: D750V3 - SN:1011

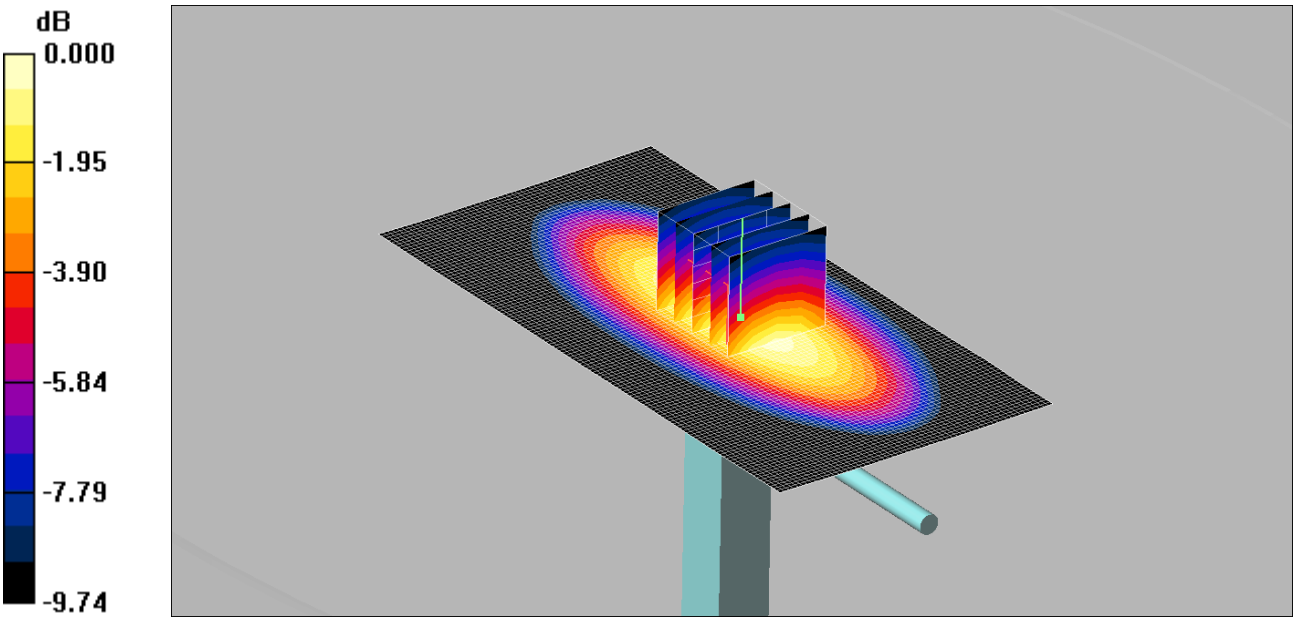

0 dB = 2.38mW/g

Communication System: CW; Frequency: 750 MHz;Duty Cycle: 1:1
Medium: 750 MHz MSL Medium parameters used: f = 750 MHz; σ = 0.962 mho/m; ε_r = 53.7; ρ = 1000 kg/m^3
Phantom section: Flat Section
DASY4 Configuration:
- Probe: ES3DV3 - SN3335; ConvF(6.2, 6.2, 6.2);
- Sensor-Surface: 4mm (Mechanical Surface Detection)
- Electronics: DAE3 Sn450; Calibrated: 31/10/2013
- Phantom: ELI v5.0; Type: QDOVA002AA; Serial: TP: 1235
- Measurement SW: DASY4, V4.7 Build 80; Postprocessing SW: SEMCAD, V1.8 Build 186

d=15mm, Pin=250mW 2/Area Scan (61x121x1): Measurement grid: dx=15mm, dy=15mm
Maximum value of SAR (interpolated) = 2.36 mW/g
d=15mm, Pin=250mW 2/Zoom Scan (5x5x7) (5x5x7)/Cube 0: Measurement grid: dx=8mm, dy=8mm, dz=5mm
Reference Value = 50.8 V/m; Power Drift = -0.054 dB
Peak SAR (extrapolated) = 3.11 W/kg
SAR(1 g) = 2.2 mW/g; SAR(10 g) = 1.48 mW/g
Maximum value of SAR (measured) = 2.38 mW/g