NOKIA

Nokia MetroHopper Radio with FC RRI/ FXC RRI

User Manual B0 Binder 1/1

C33512.22

© Nokia Networks Oy

The information in this document is subject to change without notice and describes only the product defined in the introduction of this documentation. This document is intended for the use of Nokia Networks' customers only for the purposes of the agreement under which the document is submitted, and no part of it may be reproduced or transmitted in any form or means without the prior written permission of Nokia Networks. The document has been prepared to be used by professional and properly trained personnel, and the customer assumes full responsibility when using it. Nokia Networks welcomes customer comments as part of the process of continuous development and improvement of the documentation.

The information or statements given in this document concerning the suitability, capacity, or performance of the mentioned hardware or software products cannot be considered binding but shall be defined in the agreement made between Nokia Networks and the customer. However, Nokia Networks has made all reasonable efforts to ensure that the instructions contained in the document are adequate and free of material errors and omissions. Nokia Networks will, if necessary, explain issues which may not be covered by the document.

Nokia Networks' liability for any errors in the document is limited to the documentary correction of errors. Nokia Networks WILL NOT BE RESPONSIBLE IN ANY EVENT FOR ERRORS IN THIS DOCUMENT OR FOR ANY DAMAGES, INCIDENTAL OR CONSEQUENTIAL (INCLUDING MONETARY LOSSES), that might arise from the use of this document or the information in it.

This document and the product it describes are considered protected by copyright according to the applicable laws.

NOKIA logo is a registered trademark of Nokia Corporation.

Other product names mentioned in this document may be trademarks of their respective companies, and they are mentioned for identification purposes only.

Copyright © Nokia Networks Oy 2000. All rights reserved.

© Nokia Networks Oy

Contents

Binder 1/1

Title	Document Identifier	Div.	Rem
1			
Document Note	DN99617961 Issue 2-0 en	1.0	
2			
Guide to Documentation	DN99611449 Issue 2-0 en	2.0	
3			
Installation Overview	DN99611437 Issue 2-0 en	3.0	
4			
Installation	DN99592289 Issue 2-1 en	4.0	
5			
Commissioning and Maintenance	DN99611394 Issue 2-0 en	5.0	
6			
Product Description	DN99592717 Issue 2-2 en	6.0	
7			
Glossary	DN99593058 Issue 2-1 en	7.0	

M = Missing Document
P = Preliminary

© Nokia Networks Oy

M = Missing Document
P = Preliminary

© Nokia Networks Oy

NOKIA

C33512.20 D0
Nokia MetroHopper Radio

Document Note

User Manual

© Nokia Networks Oy
Nokia Proprietary and Confidential

The information in this document is subject to change without notice and describes only the product defined in the introduction of this documentation. This document is intended for the use of Nokia Networks' customers only for the purposes of the agreement under which the document is submitted, and no part of it may be reproduced or transmitted in any form or means without the prior written permission of Nokia Networks. The document has been prepared to be used by professional and properly trained personnel, and the customer assumes full responsibility when using it. Nokia Networks welcomes customer comments as part of the process of continuous development and improvement of the documentation.

The information or statements given in this document concerning the suitability, capacity, or performance of the mentioned hardware or software products cannot be considered binding but shall be defined in the agreement made between Nokia Networks and the customer. However, Nokia Networks has made all reasonable efforts to ensure that the instructions contained in the document are adequate and free of material errors and omissions. Nokia Networks will, if necessary, explain issues which may not be covered by the document.

Nokia Networks' liability for any errors in the document is limited to the documentary correction of errors. Nokia Networks WILL NOT BE RESPONSIBLE IN ANY EVENT FOR ERRORS IN THIS DOCUMENT OR FOR ANY DAMAGES, INCIDENTAL OR CONSEQUENTIAL (INCLUDING MONETARY LOSSES), that might arise from the use of this document or the information in it.

This document and the product it describes are considered protected by copyright according to the applicable laws.

NOKIA logo is a registered trademark of Nokia Corporation.

Other product names mentioned in this document may be trademarks of their respective companies, and they are mentioned for identification purposes only.

Copyright © Nokia Networks Oy 2001. All rights reserved.

Nokia Citytalk, Nokia Extratalk, Nokia FlexiHopper, Nokia Flexitalk, Nokia Hopper Manager, Nokia Intratalk, Nokia MetroHopper, Nokia MetroHub, and Nokia MetroSite are trademarks of Nokia Networks Oy.

CE

Hereby, Nokia Corporation, declares that this Nokia MetroHopper radio is in compliance with the essential requirements and other relevant provisions of Directive: 1999/5/EC.

CE 0889 ⓘ	The product is marked with the CE marking and Notified Body number according to the Directive 1999/5/EC

FCC ID:PM5T55800–01

This device complies with Part 15 of the FCC Rules. Operation is subject to the following two conditions: (1) This device may not cause harmful interference, and (2) this device must accept any interference received, including interference that may cause undesired operation.

Summary of changes

Document	Date	Comment
C33512002PE_00	24 Jun 1999	
C33512002PE_A0	06 Sep 1999	
C33512002PE_B0	26 Oct 1999	
C33512009XE_A0	29 Oct 1999	
DN99592241 Issue 1-0 en	01 Nov 1999	New document numbering scheme adopted.
DN99592241 Issue 2-0 en	11 Feb 2000	
DN99592241 Issue 2-1 en	16 Mar 2000	
DN99592241 Issue 2-2 en	11 May 2000	
DN99592241 Issue 3-0 en	31 Aug 2001	

© Nokia Networks Oy
Nokia Proprietary and Confidential

© Nokia Networks Oy
Nokia Proprietary and Confidential

1 User Manual / Product version compatibility

C33512.20 Nokia MetroHopper with FIU 19 / RRIC User Manual Version D0

This user manual provides the instructions for the installation and operation of the products listed below.

All units are labelled with a sticker stating the product code and version.

Table 1. Outdoor unit

Product code	Product name	Product version
T55800.01	Nokia MetroHopper OU 58 GHz	B

Table 2. Alignment unit pole clamp

Product code	Product name	Product version
T55851.01	Nokia MetroHopper Mounting Adapter Plate	A

Table 3. Optical alignment unit

Product code	Product name	Product version
T55875.01	MetroHopper Optical Alignment Tool	A

© Nokia Networks Oy
Nokia Proprietary and Confidential

Table 4. FIU 19 indoor units

Product code	Product name	Product version
T55240.01	FIU 19 0x2M 1+0	C
T55240.80	FIU 19 16x2M 1+1 120	C
55240.81	FIU 19 16x2M 1+1 75	C
55240.82	FIU 19 16x2M 1+1 120 RJ-45	C

Note

The ordering practice will change so that the product codes, comprimising of both a main unit and plug-in units, are not used any longer. Now the main unit (T55240.01) and the needed number of plug-in units are ordered with seperate codes. For example, to get a 12 x 2M 1+0 configuration, place an order for one main unit and three 4 x 2M plug-in units. For 16 x 2M 1+0 you have to order a main unit a suitable upgrade kit (T55246.4x).

Note

The capacity of Nokia MetroHopper is fixed to 4 x 2 Mbit/s.

Table 5. FIU 19 upgrades

Product code	Product name	Product version
P55044.01	Hopper SW upgrade kit CD-ROM	
T55220.01	FIU 19 4x2M 120 Plug-in Unit TQ	C
T55220.02	FIU 19 4x2M 75 Plug-in Unit	C
T55220.03	FIU 19 4x2M Plug-in Units 120 RJ-45	C
T55221.01	FIU 19 Flexbus Plug-in Unit	A
T55223.01	FIU 19 Aux Data plug-in Unit	A
T55241.04	FIU 19 Mounting Kit for TM4 rack	A
T55241.05	FIU 19 Mounting Kit for ETSI rack	A
T55246.40	FIU 19 UPG for 4-12x2M 1+0 120 TQ	C

© Nokia Networks Oy
Nokia Proprietary and Confidential

Table 5. FIU 19 upgrades (Continued)

Product code	Product name	Product version
T55246.41	FIU 19 UPG for 4-12x2M 1+0 75	C
T55246.42	FIU 19 UPG for 4–12x2M 1+0 120 RJ-45	C
T55246.51	FIU 19 UPG FOR 16 X 2M TO 1+1	C
T55246.80	FIU 19 UPG to 16x2M 1+1 120	C
T55246.81	FIU 19 UPG to 16x2M 1+1 75	C
T55246.82	FIU 19 UPG to 16x2M 1+1 120 RJ-45	C

Table 6. FIU 19 spare parts

Product code	Product name	Product version
T55210.01	FIU 19 Backplane 1+0	A
T52210.02	FIU 19 Backplane 1+1	B
T55211.01	FIU 19 EXU 16x2M 120 Ohms TQ	B
T55211.02	FIU 19 EXU 16x2M 75 Ohms	B
T55211.03	FIU 19 EXU 16x2M 120 Ohms TQ RJ-45	B
T55212.01	FIU 19 16x2M IC Plug-In Unit	C
T55240.01	FIU 19 0x2M 1+0	C
T55241.01	FIU 19 Mounting Kit for 4-12x2M 1+0	A
T55241.02	FIU 19 Mounting Kit for 16x2M 1+0	A
T55241.03	FIU 19 Mounting Kit for 16x2M 1+1	A

Table 7. RRIC indoor unit

Product code	Product name	Product version
T55290.01	RRIC Radio Relay Interface	C
T55291.01	RRIC Power Supply for AC Intratalk BTS	A

© Nokia Networks Oy
Nokia Proprietary and Confidential

Table 8. Node manager programs and accessories

Product code	Product name	Product version
P38206.01	Hopper Manager C4.2 CD-ROM + Cable (2.5 m)	C
CS72451.01	LMP Cable (5.0 m)	
P31711.01	TruMan C8.0	K
E62717.01	V.11/V.28 converter cable set (PC-TRUx)	
E62717.03	V.11/V.28 converter cable set (PC-TRUx)	
26287.01	Chassis 20T/14U	
T55270.01	Nokia Q1 LMP cable	C

© Nokia Networks Oy
Nokia Proprietary and Confidential

Table 9. Flexbus cables, connectors and accessories

Product code	Product name	Product version
T36625.01	TNC-M/0–TNC-M/0, 1.5 m	
T36625.02	Cable TNC-M/0–TNC-M/0, 4 m	
T36625.03	Cable TNC-M/0–TNC-M/0, 8 m	
T36625.04	Cable TNC-M/0–TNC-M/0, 15 m	
T36626.01	Cable Reel Flexbus, RG223, 500 m	
T36629.01	Cable Reel Flexbus, RG214, 500 m	
T55255.01	Flexbus TNC-TNC (RG-223) Connector Kit	B
T55255.02	Flexbus TNC-TNC (RG-214) Connector Kit	B
T55255.11	Flexbus N-TNC (RG-223) Connector Kit	B
T55255.12	Flexbus N-TNC (RG-214) Connector Kit	B
T55257.01	Flexbus TNC-TNC Jumper Cable	B
T55257.02	Flexbus TNC-TNC Cable (500 mm)	B
T38094.01	Jumper Cables DMR 18-38CE BBU1	A
T55271.01	TNC-N Adapter for Jumper Cable	0
CS72749.60	Grounding kit KTM P 1/4” for RG-213/214	
CS72749.61	Grounding kit for RG-223 – RG-58 (61 1540 0006)	
CS72746.20	Clamp RF A4 2 x 1/4” for L-profile 40 x 40	

Note

Jumper cables for connecting the RRIC indoor unit to the connector board on top of the base station cabinet are included with the base station.

© Nokia Networks Oy
Nokia Proprietary and Confidential

Table 10. FIU 19 2M and Q1 cables and connectors

Product code	Product name	Product version
T55250.01	FIU 19 D9M-TQ Q1 Jumper Cable	F
T55250.02	FIU 19 D9F-TQ Q1 Jumper Cable	F
T55250.03	FIU 19 D9F-TQ 2x2M Jumper Cables	F
T55250.20	FIU 19 TQ-TQ Q1 or 2M Cable (500 mm)	F
T55250.21	FIU 19 TQ-TQ 2M Cable (30 m)	G
T55250.31	FIU 19 4xTQ Cable 5m open	G
T55250.32	FIU 19 4xTQ Cable 15m open	G
T55251.01	FIU 19 4xTQ 2M Connector Kit	A
T55252.01	FIU 19 4xRJ 45 2M Connector Kit	A
T55252.02	FIU 19 4xRJ 45 Aux Card Connector Kit	A
T55253.01	FIU 19 2M Cable 500 m	A
T55260.01	FIU 19 2xTQ-DB9 Q1 Adapter	D
T55265.01	Cable sets 1/4–Euro; TQ + Converter D9	A
T38122.02	Q1 Interconnection Cable	B
T38122.04	Q1 Chaining Cable 2, CE, (6xIU/SSS)	B
T38122.10	Q1 Coupling Connector, CE	B
T38127.01	Interconn. Cable, 2M, 75, C/CE (SSS/BTS)	B
T38127.02	Jumper Cable, 2x2M, 75, C/CE (SSS)	B
T38127.04	Cross-Conn. Cable, 2M, 75, CE (SSS)	B
T38128.01	Interconn. Cable, 2M, 120, C/CE (SSS/BTS)	C
T38081	4x2 Connector set DMR 18–38CE SMB	A

Table 11. Power supplies and cables

Product code	Product name	Product version
T55254.01	TALK FIU 19 Power Connector Kit	0
T55258.02	FIU 19 Power Cable 15m	0
T55259.02	FB Plug-In Power Cable 15m	0

© Nokia Networks Oy
Nokia Proprietary and Confidential

Table 11. Power supplies and cables (Continued)

Product code	Product name	Product version
T30839.01	Power AC/DC 1x100W 19/ETS 1.5U	B
T30839.02	Power AC/DC 2x100W 19/ETS 1.5U	B
T30839.03	Power DC/DC 1x100W 19/ETS 1.5U	B
T30839.04	Power DC/DC 2x100W 19/ETS 1.5U	B

© Nokia Networks Oy
Nokia Proprietary and Confidential

NOKIA

Nokia MetroHopper Radio with FC RRI/FXC RRI

Commissioning and Maintenance

User Manual B0

C33512.22

© Nokia Networks Oy

The information in this document is subject to change without notice and describes only the product defined in the introduction of this documentation. This document is intended for the use of Nokia Networks' customers only for the purposes of the agreement under which the document is submitted, and no part of it may be reproduced or transmitted in any form or means without the prior written permission of Nokia Networks. The document has been prepared to be used by professional and properly trained personnel, and the customer assumes full responsibility when using it. Nokia Networks welcomes customer comments as part of the process of continuous development and improvement of the documentation.

The information or statements given in this document concerning the suitability, capacity, or performance of the mentioned hardware or software products cannot be considered binding but shall be defined in the agreement made between Nokia Networks and the customer. However, Nokia Networks has made all reasonable efforts to ensure that the instructions contained in the document are adequate and free of material errors and omissions. Nokia Networks will, if necessary, explain issues which may not be covered by the document.

Nokia Networks' liability for any errors in the document is limited to the documentary correction of errors. Nokia Networks WILL NOT BE RESPONSIBLE IN ANY EVENT FOR ERRORS IN THIS DOCUMENT OR FOR ANY DAMAGES, INCIDENTAL OR CONSEQUENTIAL (INCLUDING MONETARY LOSSES), that might arise from the use of this document or the information in it.

This document and the product it describes are considered protected by copyright according to the applicable laws.

NOKIA logo is a registered trademark of Nokia Corporation.

Other product names mentioned in this document may be trademarks of their respective companies, and they are mentioned for identification purposes only.

Copyright © Nokia Networks Oy 2000. All rights reserved.

Nokia FlexiHopper, Nokia MetroHopper, Nokia MetroSite, and Nokia MetroHub are trademarks of Nokia Networks Oy. Any other trademarks mentioned in the documents are the property of their respective owners.

Contents

Contents 3

1 About this document 7

2 Commissioning Nokia MetroHopper 9
2.1 Precautions **9**
2.2 Commissioning with Nokia BTS Manager **10**
2.3 Commissioning with Nokia MetroHub Manager **13**
2.4 Configuring identifications and settings **13**
2.4.1 Identifications **14**
2.4.2 Unit settings **14**
2.4.3 Outdoor unit settings **14**
2.5 Verifying commissioning **16**

3 Maintaining Nokia MetroHopper 17
3.1 Preventive maintenance **17**
3.2 Performance monitoring **17**
3.2.1 Measurements **18**
3.2.2 Error counters **18**
3.2.3 Reading statistics **18**
3.3 Using loopbacks **19**
3.4 Replacing or removing outdoor unit **21**

Appendix A. Alarm descriptions 23
A.1 FC RRI unit alarms **23**
A.2 FXC RRI unit alarms **36**
A.3 MetroHopper unit alarms **40**

© Nokia Networks Oy

© Nokia Networks Oy

Summary of changes

Document	Date	Comment
C33512012SE_00	29 Oct 1999	Prerelease version
DN99611394 Issue 1-0 en	28 Dec 1999	New document numbering scheme adopted
DN99611394 Issue 2-0 en	30 May 2000	Valid for Nokia SiteWizard C1.0

© Nokia Networks Oy

© Nokia Networks Oy

1 About this document

This document gives task-oriented instructions for the commissioning of Nokia MetroHopper Radio with FC RRI or FXC RRI indoor unit. Commissioning and maintenance actions are carried out using the Nokia BTS Manager or Nokia MetroHub Manager software included in the Nokia SiteWizard CD-ROM.

This document describes *only* outdoor unit -related settings and functions. To commission Nokia MetroHopper with FC RRI or FXC RRI you need also *Nokia MetroSite GSM BTS User Manual* or *Nokia MetroHub User Manual* which describe all node-level and RRI-related settings and functions.

For information about installing FC RRI and FXC RRI transmission units, please refer to *Nokia MetroSite GSM BTS User Manual* or *Nokia MetroHub User Manual*. The instructions for installing the MetroHopper outdoor unit are found in *Outdoor Unit Installation* document in this manual. Read the *Product Description* document before commissioning Nokia MetroHopper. *Product Description* serves as a reference document and explains all relevant terms.

Please familiarise yourself with Microsoft Windows before operating Nokia BTS Manager or Nokia MetroHub Manager.

Note

Screenshots included are representations only. The actual node manager program may differ slightly from the shots depicted.

© Nokia Networks Oy

© Nokia Networks Oy

2 Commissioning Nokia MetroHopper

This chapter describes the commissioning process of the Nokia MetroHopper Radio. All commissioning tasks are performed with Nokia BTS Manager in case the radio is used with Nokia MetroSite GSM BTS or with Nokia MetroHub Manager in case the radio is used with Nokia MetroHub.

2.1 Precautions

The following pre-requisites must be fulfilled before starting the commissioning:

- you have already either
  - the FC RRI unit logically installed in the BTS

  or
  - the FXC RRI unit(s) logically installed in the BTS or the transmission node.
- the outdoor unit is installed and aligned in accordance with the instructions given in this manual.
- you already have a connection to the network element with the node manager.

Please refer to *Nokia MetroSite GSM BTS User Manual* or *Nokia MetroHub User Manual* for more instructions.

© Nokia Networks Oy

2.2 Commissioning with Nokia BTS Manager

Nokia BTS Manager contains a Commissioning Wizard, which facilitates the base station commissioning process. Run the Commissioning Wizard as instructed in *Nokia MetroSite GSM BTS User Manual*. Fill in all the required settings. Whenever an FC RRI or FXC RRI unit is included in the BTS configuration, a specific **Radio Link Settings** page is displayed during the wizard sequence. By clicking the **Radio hop(s)** button on the page you can launch a Radio Wizard sequence during which you can check or set any required outdoor unit related settings.

Commissioning with the Radio Wizard

1. The first page in the Radio Wizard sequence displays the type of the indoor unit (FC RRI or FXC RRI) and the outdoor units (MetroHopper or FlexiHopper) connected to each Flexbus interface.

   Select the **In use** option for each Flexbus interface you want to use. At least one outdoor unit must be connected and one Flexbus in use before you can proceed to the next page.

Note

The radio capacity of Nokia MetroHopper is fixed to 4 x 2 Mbit/s.

Note

If the transmission unit is FC RRI, only Flexbus 1 settings are displayed.

© Nokia Networks Oy

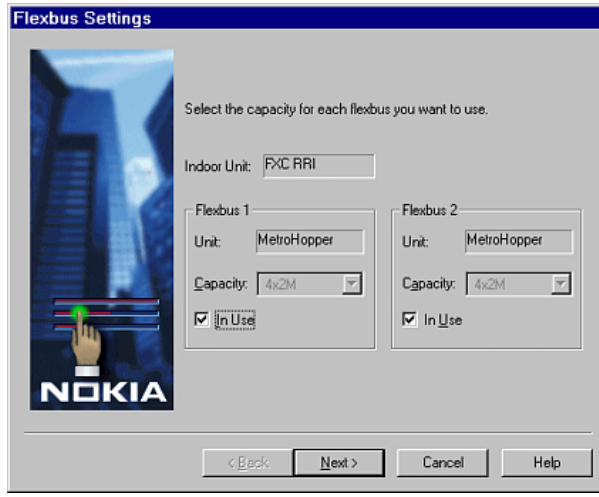

Figure 1. Flexbus settings page

2. The **MetroHopper General Settings** page is displayed next. On this page, you can select the settings for the outdoor unit connected to the Flexbus 1 interface.

   - Hop Mode: one of the terminals forming a radio hop must be configured as the master and the other end as the slave. The hierarchy is decided in the network planning phase.
   - Temporary Hop ID: the master and the slave must have the same temporary hop ID. When the commissioning is completed, this is automatically changed to a unique hop ID.
   - Channel Selection: you can choose either **Manual** or **Automatic** channel selection. When you click **Next**, the corresponding channel selection page will open.
     - If you choose Manual channel selection, select the desired channel. You can also click **Measure** to measure the interference level on the selected channels and then select the best available channel.
     - If you choose Automatic channel selection, mark the channels among which the channel is to be selected. The software automatically measures the interference levels on each channel, and selects the best one.

© Nokia Networks Oy

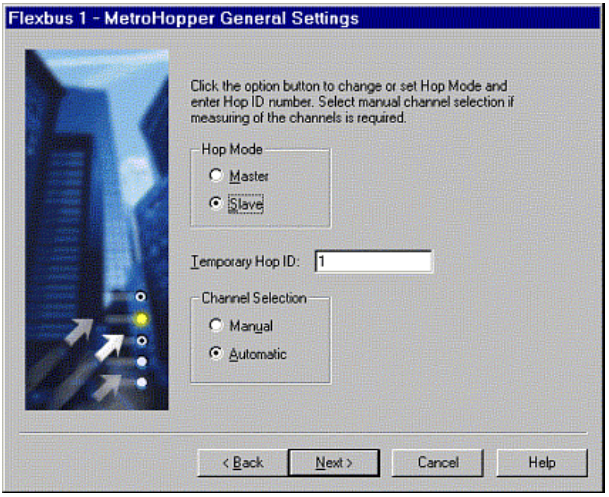

Figure 2. MetroHopper General Settings page

3. If the transmission unit in use is FXC RRI, define the settings for the Flexbus interface 2 and the connected outdoor unit as described above. If the transmission unit is FC RRI, only one Flexbus is available and you can proceed to step 4 directly.

4. When you have entered all the required settings, **Summary of Commissioning Settings** page is displayed. It contains all the settings you have defined for the radio(s). Check that the settings are correct and click **Next** to send the settings to the node. You can also go back in case you want to adjust the settings on previous pages.

5. **Monitoring Hop** page displays the status of the hops during and after the commissioning. If the commissioning is successful, the status becomes **Ready**.

Note

The status of the hop will not be **Ready** before also the other end of the hop is commissioned successfully. Thus, the status of the terminal that is commissioned first will have the status **Commissioning** until the far-end terminal is commissioned.

© Nokia Networks Oy

Click **Report** to see a more detailed commissioning report for each outdoor unit. The commissioning report contains, for example, the measured interference level of the selected channel, and the fading margin measurement.

Click **Next** to return to the Nokia BTS Manager Commissioning Wizard.

2.3 Commissioning with Nokia MetroHub Manager

Nokia MetroHub Manager contains Commissioning Wizard, which facilitates the commissioning process. Commissioning Wizard will first ask you to accept the selected site configuration file (`.SDF`) and to send the node settings to the node.

In case radio link equipment is installed, you can monitor the radio hops in the **Check and Fine-tune Hops** page. The Commissioning Wizard will automatically draw a commissioning report which is displayed on the last page of the wizard sequence.

In case you will later install new radios, you can commission the equipment by launching the **Radio Wizard** from the **FXC RRI** menu. The procedure is exactly the same as described in the previous section.

Note

FC RRI is not compatible with Nokia MetroHub.

2.4 Configuring identifications and settings

This section describes how to view or change outdoor unit related identifications or settings with Nokia BTS Manager or Nokia MetroHub Manager. When you are using Nokia BTS Manager, all Nokia MetroHopper related identifications and settings are accessed through the **Transmission** menu. In case you are using Nokia MetroHub Manager, these are found under the **FXC RRI** menu.

Note

For simplicity, both the Transmission menu of Nokia BTS Manager and the FXC RRI menu of Nokia MetroHub Manager are henceforth referred to as **Transmission / FXC RRI**.

© Nokia Networks Oy

To view or change unit identifications, click **Transmission / FXC RRI** → **Identifications**, and select the required unit. A window detailing the identifications of the selected unit will open.

To view or change unit settings, click **Transmission / FXC RRI** → **Settings**, and select the required unit. A window detailing the settings of the selected unit will open.

Any changes you make are sent to the node as you click on the **OK** or **Apply** button of the dialog in question.

2.4.1 Identifications

User defined identifications for a network element or a unit include, for example, notes on the installation. Identifications used in alarm display can also be changed. Some of the information (such as the serial number of the product) cannot be altered, because it is read directly from the equipment.

To change the identifications of a functional entity, type the desired identification information in the text box.

2.4.2 Unit settings

Flexbus 1 and Flexbus 2

Click **Transmission / FXC RRI** → **Settings**, and select **Unit**. The Unit settings dialog box will open. Select the required Flexbus interface. In these windows you can enable or disable Flexbus interfaces and set the appropriate capacity. Note that with Nokia MetroHopper the capacity is fixed to 4 x 2 Mbit/s. You can also switch the OU power feed on or off.

To enable/disable a Flexbus interface, select or clear the **In Use** checkbox.

To set the **OU power supply** on/off, select the appropriate option.

2.4.3 Outdoor unit settings

Click **Transmission / FXC RRI** → **Settings**, and select either **Outdoor unit 1** or **Outdoor unit 2**. The corresponding MetroHopper settings dialog box will open.

Transmitter mode

The possible values for **Transmitter mode** are **Operating**, **Forced transmit**, **Receiving only**, and **Commissioning**. Note that it is not possible to switch to certain modes at all times.

© Nokia Networks Oy

Hop end mode

One of the terminals forming a hop must be configured as the **master** and the other as the **slave**. In order to change the hop end mode, you will need to recommission the hop by using Radio Wizard.

In case external synchronisation is used, you can select a terminal also to function as the **synchronising master**. See *Product Description* for more information about burst synchronisation.

Transmission channel

Displays the channel in use.

Hop ID

This field displays the unique hop ID. Note that the master and the slave must have the same hop ID.

Interleave status

Possible values for Interleave status are **Off**, **Depth 2**, and **Depth 4**. See *Product Description* for more information about interleaving.

To change the interleave status, select the required value from the list. Note that both ends of a radio hop must have the same interleave status.

© Nokia Networks Oy

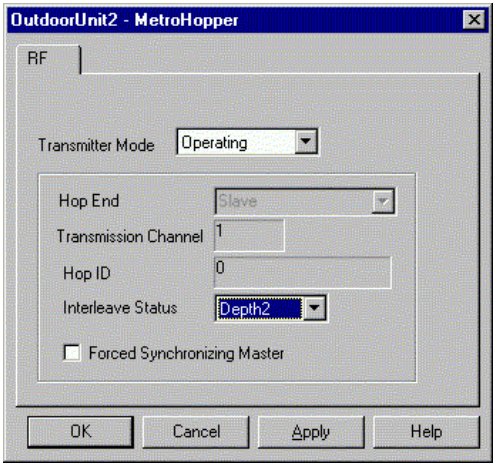

Figure 3. Outdoor Unit Settings

2.5 Verifying commissioning

It is recommended to monitor the hop for at least half an hour after all settings have been made at both ends of the hop. Reset the statistics and the error counters and let the hop operate for half an hour (or longer, if desired). After the time has passed, check that the signal quality statistics and the error counters do not show any undesired values (see Section 3.2.).

If the signal quality is OK (unavailability time = 0) and there are no unexpected alarms, the commissioning of the hop is complete. If there occurs any unavailability time during the monitoring, repeat the monitoring.

© Nokia Networks Oy

3 Maintaining Nokia MetroHopper

This chapter contains the following information:

- preventive maintenance
- performance monitoring
- replacing or removing equipment.

3.1 Preventive maintenance

Maintenance of the radio includes measurements which do not interfere with the communication. Measurements which do interfere with the communication can also be conducted when the radio is in operation, provided that the measurements are performed at a time when there is no traffic or the traffic can be rerouted. With the Nokia Network Management System (NMS), service measurements can be performed in a centralised manner for the entire network without having to move physically from station to station. However, any measurements performed with external measuring instruments must be conducted locally.

Record the measurements so that they can be compared with earlier results and used to detect significant changes in the results. Store the measurement records at the location where the measurements are conducted, that is, the records of centralised measurements in the central monitoring room, and the records of external measurements at the equipment station.

3.2 Performance monitoring

The indoor units record information regarding the performance of the network element.

The performance information is divided into three areas:

© Nokia Networks Oy

- measurements
- error counters
- signal quality statistics.

Each of these is available from the **Measurements** or **Statistics** menu in the node manager, in some cases, from the toolbar.

The measurement and error counter windows both display information about the performance of the network element and its current operating condition. The statistics are collected for the signal.

3.2.1 Measurements

The **Interface Measurements** window, which is opened from **Transmission / FXC RRI** → **Measurements**, displays selected information about the network element. This information is in the form of, for example, bit error rates and voltage or power levels recorded from particular units inside the functional entities of the network element.

Monitoring measurements

These values are automatically refreshed according to the time interval that you can enter into the **Auto Refresh** field. If the refresh rate is set to 0 seconds, the refresh is done only once. The values can also be manually refreshed by clicking the **Refresh** button.

3.2.2 Error counters

Error counters in the network element record the number of times that an error had occurred in a particular unit or functional entity.

Click **Transmission / FXC RRI** → **Statistics** to open the **Statistics** dialog box, which displays the error counters for the selected interface.

All error counters in the network element can be reset to zero by selecting the corresponding **Reset** radio button in the **Statistics** dialog box.

3.2.3 Reading statistics

The statistics that the network element records for signal quality are kept to ITU-T recommendation G.826. These values are available for 2M platform interfaces of FXC RRI (last 16 measurements).

The following statistics are recorded:

© Nokia Networks Oy

Table 1. Statistics

ID text	Value	Description
G.826 TT	seconds	Total Time as specified in G.826
G.826 AT	seconds	Available Time as specified in G.826
G.826 ES	seconds	Errored Seconds as specified in G.826
G.826 SES	seconds	Severely Errored Seconds as specified in G.826[1)]
G.826 BBE	counter	Background Block Errors as specified in G.826
G.826 EB	counter	Errored Blocks as specified in G.826
1) G.826 gives two definitions for SES. In Nokia Q1, the definition of SES as “≥30% errored blocks in one-second period" is adopted.		

To see the signal quality counters, click **Transmission / FXC RRI → Statistics** on the menu. This will open the **Statistics** dialog box, in which you can choose the interface for which the statistics will be displayed.

It is possible to reset all the signal quality statistics by selecting the corresponding **Reset** radio button in the **Statistics** dialog box.

3.3 Using loopbacks

Each unit contains several loopback points, which you can set manually to test the node. These loopbacks are accessed by clicking **Transmission / FXC RRI → Interface loops** on the menu.

The loopback status can change without the user changing it, for example, if the time-out has been reached. Because of this, the **Loopback** window has its own private status bar, which shows the last time the status of the loopbacks was checked, and how long till the next refresh. You can set the refresh value by selecting **Manage → Service Interface** on the menu and entering the required value on the **Time-outs** tab.

© Nokia Networks Oy

Table 2. Loopbacks

Loopback title	Description
Platform interfaces	Loopbacks in the 2 Mbit/s platform interfaces.
FB channels	Loopbacks in the 2 Mbit/s signals in the cross-connection section. These channels are also connected to a Flexbus.
Flexbuses	Loopbacks in Flexbus interfaces.

Caution

Setting a Flexbus loop cuts the connection to the outdoor unit until the loop expires. This includes all data and management information.

To set a loopback point:

1. Select the required interface from the list.
2. Define the required loop type by selecting the appropriate radio button.
3. Send the changes to the node by clicking the **Send** button.

© Nokia Networks Oy

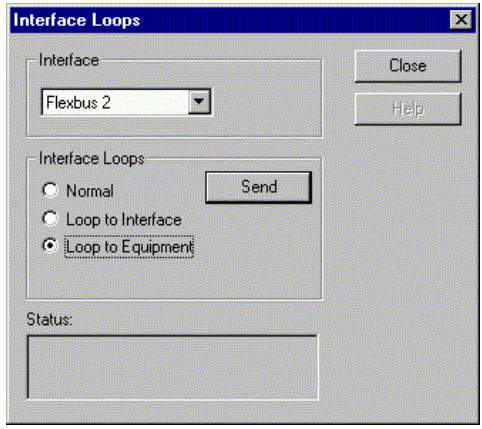

Figure 4. Interface loops window

Note

When a loopback has been set, no other settings will take effect until the equipment is returned to normal state.

To force the equipment to normal state, select the **Normal** radio button and click the **Send** button.

3.4 Replacing or removing outdoor unit

Detailed instructions on removing and installing the outdoor unit can be found in the *OU Installation* part of this manual.

© Nokia Networks Oy

Caution

Switch the Flexbus OU power supply off with the node manager before replacing a faulty outdoor unit.

Note

If the units to be removed or replaced carry important traffic, reroute the traffic before starting the work. The removal or replacement of equipment cuts traffic.

To replace or remove the Nokia MetroHopper outdoor unit:

1. Set the OU to **Receiving only** transmitter mode (see Section). This ensures that the radio will not transmit accidentally in case it is reinstalled.
2. Uninstall the OU logically by clicking with the right mouse button the unit in the **Equipment** window and selecting the command **Uninstall**.
3. Switch the power to the OU off. The power can be turned off with the node manager. Click **Transmission / FXC RRI** → **Settings** → **Unit** and clear the OU power setting of the appropriate Flexbus interface.
4. Disconnect the cabling.
5. Remove the unit. Follow the instructions found in the *OU Installation* part of this manual.
6. Install a new unit (*if applicable*). Follow the instructions found in the *OU Installation* part of this manual.

If the replacement of the radio is done carefully, the alignment will not be affected.

After replacing the outdoor unit, run the **Radio Wizard** to make the link operational.

© Nokia Networks Oy

Appendix A. Alarm descriptions

This appendix lists the alarms that a Nokia MetroHopper with FC RRI or FXC RRI network element can give. Each table also gives a short description of the fault generating the alarm and provides some guidelines on how to remedy the fault.

The alarms are presented in alphabetical order according to the long alarm names. The alarm tables give the following information:

- **Title row** shows the long alarm name.
- **Severity** shows the severity class of the alarm as it appears in the Node Manager.
- **Unit/SB type** shows the plug-in unit indicating the alarm or the type of the supervision block (SB) indicating the alarm.
- **FE** shows the functional entity indicating the alarm.
- **SB** shows the supervision block indicating the alarm.
- **Fault code** shows the fault code (in decimal).
- **Consequence** shows whether an indication signal is sent upstream or downstream.
- **Meaning** gives the possible cause of the alarm.
- **Instructions** give instructions on how to remedy the fault.
- **Cancelling** gives instructions on how the alarm is cancelled.

A.1 FC RRI unit alarms

Active alarm point	
Severity: Major	Unit/SB type: EAC input 1-10
Fault code: 240	Consequence:
Meaning: EAC inputs from BTS	
Instructions:	
Cancelling:	

© Nokia Networks Oy

AIS 2M	
Severity: Major	Unit/SB type: 1) 2M LIF 2) BFI channel
Fault code: 66	Consequence:
Meaning: Alarm signal is received in RX direction	
Instructions:	
Cancelling:	

Alarm signal is received	
Severity: Critical	Unit/SB type: Flexbus
Fault code: 64	Consequence:
Meaning: OU is sending pseudo frame (OU not locked to RX signal)	
Instructions:	
Cancelling:	

Buffer overflow	
Severity: Critical	Unit/SB type: BFI channel
Fault code: 113	Consequence:
Meaning: 2M signal buffer overflow/underflow	
Instructions:	
Cancelling:	

Configuration error		
Severity: Minor	Unit/SB type: Identifications	
Fault code: 186	Consequence:	

© Nokia Networks Oy

Configuration error
Meaning: Identifications missing
Instructions:
Cancelling:

Database full	
Severity: Warning	Unit/SB type: FM event history
Fault code: 162	Consequence:
Meaning: Fault management database full	
Instructions: Read all alarms and reset	
Cancelling:	

Equipment reset	
Severity: Warning	Unit/SB type: HW setup
Fault code: 148	Consequence:
Meaning:	
Instructions:	
Cancelling:	

Error rate > 1 E-3	
Severity: Critical	Unit/SB type: 1) Flexbus 2) PRBS2 3) PRBSF 4) 2M LIF
Fault code: 99	Consequence:
Meaning: 1, 4) Received signal BER over limit 2, 3) Detector BER over limit	
Instructions:	
Cancelling:	

© Nokia Networks Oy

Error rate > 1 E-4	
Severity: Major	Unit/SB type: 1) Flexbus 2) PRBS2 3) PRBSF 4) 2M LIF
Fault code: 100	Consequence:
Meaning: 1, 4) Received signal BER over limit 2, 3) Detector BER over limit	
Instructions:	
Cancelling:	

Error rate > 1 E-5	
Severity: Major	Unit/SB type: 1) Flexbus 2) PRBS2 3) PRBSF 4) 2M LIF
Fault code: 101	Consequence:
Meaning: 1, 4) Received signal BER over limit 2, 3) Detector BER over limit	
Instructions:	
Cancelling:	

© Nokia Networks Oy

Error rate > 1 E-6	
Severity: Major	Unit/SB type: 1) Flexbus 2) PRBS2 3) PRBSF 4) 2M LIF
Fault code: 102	Consequence:
Meaning: 1, 4) Received signal BER over limit 2, 3) Detector BER over limit	
Instructions:	
Cancelling:	

Far-end alarm	
Severity: Major	Unit/SB type: 1) Flexbus 2) 2M LIF
Fault code: 179	Consequence:
Meaning: Far end is sending R-bit or T-bit	
Instructions:	
Cancelling:	

Fault in installation of equipment	
Severity: 1) Warning 2) Critical	Unit/SB type: 1) HW setup 2) Flexbus
Fault code: 142	Consequence:
Meaning: 1) Incompatibility detected 2) Flexbus not in use but OU (or IU) is connected to it	
Instructions:	
Cancelling:	

© Nokia Networks Oy

Fault in oscillator	
Severity: Critical	Unit/SB type: Clock monitor
Fault code: 137	Consequence:
Meaning: Fault in oscillator	
Instructions:	
Cancelling:	

Fault in power supply	
Severity: Critical	Unit/SB type: 1) Flexbus 2) Power supply
Fault code: 0	Consequence:
Meaning: OU power supply fault	
Instructions:	
Cancelling:	

Fault in unit	
Severity: Critical	Unit/SB type: Unit
Fault code: 150	Consequence:
Meaning: Unit temperature crossed higher threshold	
Instructions:	
Cancelling:	

© Nokia Networks Oy

Forced control on	
Severity: Critical	Unit/SB type: 1) Flexbus 2) Measurement point
Fault code: 141	Consequence:
Meaning: 1) OU power supply forced on or off 2) Signal connected to measurement point	
Instructions:	
Cancelling:	

Forced indication	
Severity: Warning	Unit/SB type: Flexbus
Fault code: 149	Consequence:
Meaning: Flexbus LED state is forced	
Instructions:	
Cancelling:	

Loop to equipment	
Severity: Major	Unit/SB type: Flexbus
Fault code: 22	Consequence:
Meaning: Loopback to terminal	
Instructions:	
Cancelling:	

© Nokia Networks Oy

Loop to interface	
Severity: Major	Unit/SB type: 1) Flexbus 2) 2M LIF 3) BFI channel
Fault code: 21	Consequence:
Meaning: 1) Loopback to radio path 2) Signal looped back to BTS 3) Loopback to Flexbus	
Instructions:	
Cancelling:	

Loss of CRC multiframe alignment	
Severity: Critical	Unit/SB type: 2M LIF
Fault code: 86	Consequence:
Meaning: Frame alignment lost (CRC in use)	
Instructions:	
Cancelling:	

Loss of frame alignment	
Severity: Critical	Unit/SB type: 1) Flexbus 2) 2M LIF
Fault code: 81	Consequence:
Meaning: 1) RX frame lock lost / FEC header error / Frame alignment lost 2) Frame alignment lost (CRC not in use)	
Instructions:	
Cancelling:	

© Nokia Networks Oy

Loss of incoming signal	
Severity: Critical	Unit/SB type: Flexbus
Fault code: 48	Consequence:
Meaning: RX clock is missing	
Instructions:	
Cancelling:	

Operating error	
Severity: Critical	Unit/SB type: SW setup
Fault code: 144	Consequence:
Meaning: File system error / SW error	
Instructions:	
Cancelling:	

Real time lost fault	
Severity: Major	Unit/SB type: Real time clock
Fault code: 165	Consequence:
Meaning: Real time clock is not set after reset	
Instructions:	
Cancelling:	

Real time updated	
Severity: Warning	Unit/SB type: Real time clock
Fault code: 184	Consequence:
Meaning: Updated real time clock difference more than 500 ms	
Instructions:	
Cancelling:	

© Nokia Networks Oy

Settings have changed	
Severity: Warning	Unit/SB type: 1) FM setup 2) Identifications 3) Flexbus 4) 2M LIF 5) BFI channel
Fault code: 185	Consequence:
Meaning: 1-2) Checksum has changed 3) G.826 settings have changed	
Instructions:	
Cancelling:	

Statistics reset	
Severity: Warning	Unit/SB type: 1) Flexbus 2) 2M LIF
Fault code: 263	Consequence:
Meaning:	
Instructions:	
Cancelling:	

Subrack has excessive units	
Severity: Major	Unit/SB type: 1) HW setup
Fault code: 140	Consequence:
Meaning:	
Instructions:	
Cancelling:	

© Nokia Networks Oy

Subrack is missing units	
Severity: Critical	Unit/SB type: HW setup
Fault code: 139	Consequence:
Meaning:	
Instructions:	
Cancelling:	

Temperature alarm	
Severity: Major	Unit/SB type: Unit
Fault code: 145	Consequence:
Meaning: Unit temperature crossed lower threshold	
Instructions:	
Cancelling:	

Test generator on	
Severity: Major	Unit/SB type: 1) PRBS2 2) PRSF
Fault code: 25	Consequence:
Meaning: Test generator on / Test detector on / Polynomial selected / Test running	
Instructions:	
Cancelling:	

Unavailability	
Severity: Critical	Unit/SB type: 1) Flexbus 2) 2M LIF
Fault code: 262	Consequence:

© Nokia Networks Oy

Unavailability
Meaning:
Instructions:
Cancelling:

15 min G.826 ES threshold crossed	
Severity: Minor	Unit/SB type: 1) Flexbus 2) 2M LIF
Fault code: 256	Consequence:
Meaning:	
Instructions:	
Cancelling:	

15 min G.826 SES threshold crossed	
Severity: Major	Unit/SB type: 1) Flexbus 2) 2M LIF
Fault code: 257	Consequence:
Meaning:	
Instructions:	
Cancelling:	

15 min G.826 BBE threshold crossed	
Severity: Minor	Unit/SB type: 1) Flexbus 2) 2M LIF
Fault code: 258	Consequence:
Meaning:	
Instructions:	
Cancelling:	

© Nokia Networks Oy

24 h G.826 ES threshold crossed	
Severity: Warning	Unit/SB type: 1) Flexbus 2) 2M LIF
Fault code: 259	Consequence:
Meaning:	
Instructions:	
Cancelling:	

24 h G.826 SES threshold crossed	
Severity: Warning	Unit/SB type: 1) Flexbus 2) 2M LIF
Fault code: 260	Consequence:
Meaning:	
Instructions:	
Cancelling:	

24 h G.826 BBE threshold crossed	
Severity: Warning	Unit/SB type: 1) Flexbus 2) 2M LIF
Fault code: 261	Consequence:
Meaning:	
Instructions:	
Cancelling:	

© Nokia Networks Oy

A.2 FXC RRI unit alarms

AIS 2M	
Severity: Major	Unit/SB type: 1) Flexbus channel 2) Platform interface
Fault code: 66	Consequence:
Meaning: Alarm signal is received, the received signal has no framing and it is all ones.	
Instructions: The signal is cut somewhere in the network and AIS replacement has taken place. Follow the 2M signal in the network to find out the place where AIS replacement has been done. This link is usually faulty or has configuration errors. Other alarms may cause this alarm because of AIS switching in the receiving direction as shown in the Consequence field of some alarms.	
Cancelling:	

Alarm signal received	
Severity: Critical	Unit/SB type: Flexbus
Fault code: 64	Consequence: AIS is connected to all received Flexbus channels. This will cause AIS 2 Mbit/s alarm to all used platform interfaces that are connected to the alarming Flexbus interface.
Meaning: OU has lost the frame lock and it has replaced the frame with a pseudo frame to ensure IU - OU communication.	
Instructions: The signal may be faded in the radio path. In this case the OU has the loss of incoming radio signal alarm. If this is not active in the OU, check the radios at both ends of the hop. They must have the right configuration (frequency, interleaving and TX power on). Check also that the same capacity has been selected for both ends of the hop.	
Cancelling: If the radio signal is faded it will come back when the fading stops. If the OU is FlexiHopper, check the maximum TX power setting. If a stronger TX power is allowed, it will withstand fading better.	

© Nokia Networks Oy

Error rate > 1 E-3	
Severity: Critical	Unit/SB type: 1) Flexbus 2) Platform interface
Fault code: 99	Consequence: 1) AIS is connected to all received Flexbus channels. 2) AIS is connected to the receiving direction of the platform interface.
Meaning: 1) Received signal bit error rate is worse than 1.0 * 10^{-3} 2) Received platform interface error rate is worse than 1.0 * 10^{-3}	
Instructions: 1) -'Alarm signal received' causes also this alarm - Signal may be faded in the radio path or antenna alignment has changed. 2) -If the Flexbus where this interface has been connected has the same alarm, see its instructions. -If Flexbus does not have this alarm, use loop to equipment for both the platform interface and the Flexbus. If either of the loops gives this alarm, replace the unit.	
Cancelling: If the radio signal is faded it will be restored when the fading stops. If antenna alignment has changed, align the antennas according to the instructions in the radio documentation.	

Error rate > 1 E-6	
Severity: Critical	Unit/SB type: Platform interface
Fault code: 102	Consequence:
Meaning: Received platform interface error rate is worse than 1.0 * 10^{-6}	
Instructions: Most probably radio path fading causes this. If it remains for a long time, use loop to equipment for both the platform interface and Flexbus. If either of the loops gives this alarm, replace the unit.	
Cancelling:	

Far-end alarm	
Severity: Major	Unit/SB type: Platform interface
Fault code: 179	Consequence:
Meaning: Far end has lost frame alignment.	
Instructions: Check the signal flow from the transmit direction of the alarming interface to the far end.	
Cancelling:	

© Nokia Networks Oy

Fault in power supply	
Severity: Critical	Unit/SB type: Flexbus
Fault code: 0	Consequence: AIS is connected to all received Flexbus channels.
Meaning: Flexbus overcurrent protection circuit has cut off +55 V power feed.	
Instructions: Check the OU cabling, remove short circuits and connect the power feed back with the Manager. Note: It is recommended to switch the DC power feed off when connecting OU to the Flexbus interface. If the OU is connected to a Flexbus interface with the DC power feed on, the overcurrent protection may cut the power feed.	
Cancelling:	

Loop to equipment	
Severity: Major	Unit/SB type: 1) Flexbus 2) Platform interface
Fault code: 22	Consequence: 1) AIS is connected to all transmitted Flexbus channels in the receiving equipment. 2) AIS is connected to the TX direction of the looped interface.
Meaning: 1) Flexbus equipment loop is active. The whole transmitted Flexbus signal is looped back to IU. The IU - OU communication will be cut during the loop. 2) Platform interface loop to equipment is active. The whole transmitted platform interface signal is looped back to the IU.	
Instructions: Loops are normally used to locate faults.	
Cancelling: A loopback will be removed automatically after a control timeout has expired. A loop can also be removed with Manager back to the normal state.	

© Nokia Networks Oy

Loop to interface	
Severity: Major	Unit/SB type: 1) Flexbus 2) Flexbus channel 3) Platform interface
Fault code: 21	Consequence: 1) AIS is connected to all received Flexbus channels. 2) AIS is connected to the receiving direction of the looped channel. 3) AIS is connected to the receiving direction of the looped interface.
Meaning: 1) Flexbus interface loop is active. The whole received Flexbus signal is looped back to the OU (or another IU). The IU - OU communication will be cut during the loop. 2) Flexbus channel loop to interface is active. The whole received Flexbus signal is looped back to the OU (or another IU). 3) Platform interface loop to interface active. The whole received platform signal is looped back to the OU (or another IU) without regenerating time slot 0.	
Instructions: Loops are normally used to locate faults.	
Cancelling: A loopback will be removed automatically after a control timeout has expired. A loop can also be removed with Manager back to the normal state.	

Loss of CRC multiframe alignment	
Severity: Critical	Unit/SB type: Platform interface
Fault code: 86	Consequence: AIS is connected to the receiving direction of the platform interface.
Meaning: Platform interface has lost CRC frame alignment.	
Instructions: Check that the other end of the link has CRC in use. Use the same instructions as in the loss of frame alignment to locate the fault.	
Cancelling:	

© Nokia Networks Oy

Loss of frame alignment	
Severity: Critical	Unit/SB type: 1) Flexbus 2) Platform interface
Fault code: 81	Consequence: 1) AIS is connected to all received Flexbus channels. 2) AIS is connected to the receiving direction of the platform interface.
Meaning: 1) IU has lost frame alignment 2) Platform interface has lost frame alignment.	
Instructions: 1) -Check from the Configuration view that all installed units are present. A faulty OU may not be displayed in Configuration view. Try connecting power feed off and back on. If the OU still is not present, replace it. - Check that the radios are configured correctly (i.e. no ‘configuration error’ or ‘fault in unit’ alarms). -If RX level is good enough, check that both ends of the hop are set to same capacity and that Flexbus interfaces are in use, and that the outdoor units’ interleaving settings are same at both ends of the hop. Check with Flexbus loop to equipment whether the IU locks to its own signal. If not, replace the indoor unit. 2) -Check from the Cross-connection view that the right signal is connected to this interface at both ends of the hop. -Use platform interface loop to equipment to check that platform interface locks to its own TX signal. If not, replace the unit. -Use Flexbus loop to equipment and check that platform interface locks to its own signal. If not, replace the unit.	
Cancelling:	

A.3 MetroHopper unit alarms

Fault in power supply	
Severity: Critical	SB: Radio interface
Fault code: 0	Consequence:
Meaning: One (or more) of the supply voltages is low (difference between nominal and real voltage is bigger than 10%).	
Instructions: Replace the unit and return the faulty one to maintenance.	
Cancelling:	

© Nokia Networks Oy

Fault in unit	
Severity: Critical	SB: Radio interface
Fault code: 150	Consequence:
Meaning: Initialisation fault: data missing from EEPROM or the file system; EEPROM not readable due to hardware fault or EEPROM not initialised properly.	
Instructions:	
Cancelling:	

Incoming signal level incorrect	
Severity: Critical	SB: Radio interface
Fault code: 59	Consequence:
Meaning: Received signal level is below the limit (-75 dBm). Possible reasons: far-end transmitter off; misalignment; hop distance too long; line-of-sight obstructed; heavy rain; antenna broken or extremely dirty.	
Instructions: Check the alignment. Return a faulty unit to maintenance.	
Cancelling:	

Loss of incoming radio signal	
Severity: Critical	SB: Radio interface
Fault code: 60	Consequence:
Meaning: Frame alignment word lock lost. Signal level too low or no far-end radio present. Possible HW fault in near-end radio.	
Instructions: Check the far-end radio, alignment and/or the radio path. Return a faulty unit to maintenance.	
Cancelling:	

No free channel	
Severity: Critical	SB: Radio interface
Fault code: 40	Consequence:

© Nokia Networks Oy

No free channel
Meaning: Commissioning failed: no free channel available or all allowed channels have excessive interference.
Instructions:
Cancelling:

Temperature alarm	
Severity: Major	SB: Radio interface
Fault code: 145	Consequence:
Meaning: Operating temperature below -50 °C or above +80 °C. Possibility of measurement sensor fault.	
Instructions:	
Cancelling:	

© Nokia Networks Oy

NOKIA

Nokia MetroHopper Radio with FC RRI/FXC RRI

Guide to Documentation

User Manual B0

C33512.22

© Nokia Networks Oy

The information in this document is subject to change without notice and describes only the product defined in the introduction of this documentation. This document is intended for the use of Nokia Networks' customers only for the purposes of the agreement under which the document is submitted, and no part of it may be reproduced or transmitted in any form or means without the prior written permission of Nokia Networks. The document has been prepared to be used by professional and properly trained personnel, and the customer assumes full responsibility when using it. Nokia Networks welcomes customer comments as part of the process of continuous development and improvement of the documentation.

The information or statements given in this document concerning the suitability, capacity, or performance of the mentioned hardware or software products cannot be considered binding but shall be defined in the agreement made between Nokia Networks and the customer. However, Nokia Networks has made all reasonable efforts to ensure that the instructions contained in the document are adequate and free of material errors and omissions. Nokia Networks will, if necessary, explain issues which may not be covered by the document.

Nokia Networks' liability for any errors in the document is limited to the documentary correction of errors. Nokia Networks WILL NOT BE RESPONSIBLE IN ANY EVENT FOR ERRORS IN THIS DOCUMENT OR FOR ANY DAMAGES, INCIDENTAL OR CONSEQUENTIAL (INCLUDING MONETARY LOSSES), that might arise from the use of this document or the information in it.

This document and the product it describes are considered protected by copyright according to the applicable laws.

NOKIA logo is a registered trademark of Nokia Corporation.

Other product names mentioned in this document may be trademarks of their respective companies, and they are mentioned for identification purposes only.

Copyright © Nokia Networks Oy 2000. All rights reserved.

Nokia FlexiHopper, Nokia MetroHopper, Nokia MetroHub, Nokia MetroSite, and Nokia UltraSite are trademarks of Nokia Networks Oy.

Contents

Contents 3

1 About this document 7

2 User Manual Contents 9
2.1 Navigation aid **9**
2.2 Contents of the documents **10**

3 Ordering documents 11
3.1 Delivery media **11**
3.1.1 Electronic documents **11**
3.1.2 Paper documents **11**
3.2 Sales items **11**

4 Conventions used in the documents 13
4.1 User manual identification **13**
4.2 Document identification **13**
4.3 Typographic conventions **14**

© Nokia Networks Oy

© Nokia Networks Oy

Summary of changes

Document	Date	Comment
C33512010SE_00	29 Nov 1999	
DN99611449 Issue 1-0 en	28 Dec 1999	New document numbering scheme adopted.
DN99611449 Issue 2-0 en	30 May 2000	

© Nokia Networks Oy

© Nokia Networks Oy

1 About this document

This document describes the scope, structure, and use of *Nokia MetroHopper with FC RRI / FXC RRI User Manual*, which is also a subset of Nokia MetroSite solution documentation.

This document provides the following information:

- a navigation aid for the documents included in the user manual
- a short description of the documents included in the user manual
- a list of the Nokia MetroHopper documents and other related documents
- instructions for ordering the documents
- a description of typographic conventions.

Readership

This manual is intended for the application planning, installation and commissioning personnel of Nokia MetroHopper. The reader is assumed to have the basic knowledge of microwave transmission systems.

Your comments

We appreciate your feedback. If you have any comments about this or any other manual, please fill in the documentation comment form in the beginning of this manual and return it to your local Nokia representative.

© Nokia Networks Oy

© Nokia Networks Oy

2 User Manual Contents

2.1 Navigation aid

This chapter helps you to find the documents that you need in order to accomplish a certain task.

Table 1. Navigation aid

Task	Documents
Finding your way through the manual	Guide to Documentation Index Glossary
Familiarising with the product	Product Description
Planning the application	Product Description
Installing the radio	Installation Overview Outdoor Unit Installation
Commissioning	Commissioning and Maintenance Outdoor Unit Installation
Maintaining and upgrading	Outdoor Unit Installation Commissioning and Maintenance

Instructions on how to use Nokia BTS Manager and Nokia MetroHub Manager (included in Nokia SiteWizard) are given in *Nokia MetroSite GSM Base Station User Manual* and *Nokia MetroHub User Manual* respectively, and in the online Help of the manager software.

© Nokia Networks Oy

2.2 Contents of the documents

This section describes the general contents of individual documents in this user manual.

Installation Overview

- overall work order
- principles of grounding.

Nokia MetroHopper Outdoor Unit Installation

- instructions for installing the outdoor unit (OU)
- instructions for alignment
- instructions for connecting cables.

Commissioning & Maintenance

- instructions for the commissioning procedure
- maintenance principles.

Product Description

- description of features
- examples of network and site applications
- information about application and installation planning
- description of management tools
- description of the mechanical structure of the outdoor unit and the indoor units
- technical specifications and standards.

Glossary

- technical abbreviations used in this manual
- other technical key terms used in this manual.

Index

- easy-to-use tool for finding information.

© Nokia Networks Oy

3 Ordering documents

You can order Nokia MetroHopper and related documents in electronic or/and paper format. The documents are always delivered in NED package or User Manual binders. To order the documents, contact your local Nokia representative.

3.1 Delivery media

3.1.1 Electronic documents

The NED viewer provides electronic access to Nokia documentation.

Each NED package includes the needed software and documentation:

- Nokia Documentation CD-ROM, containing document sets and NED Viewer
- NED User Guide
- NED Quick Reference Card.

For more information about NED, refer to the *NED User Guide*.

3.1.2 Paper documents

Paper documents are delivered in binders.

- Each binder contains a Contents list, helping you to locate the required document.
- The binder label tells the product name and product code.

3.2 Sales items

Nokia MetroHopper customer documentation consists of the following items:

© Nokia Networks Oy

- Nokia MetroHopper Radio Product Overview
- Nokia MetroHopper Radio with FC RRI / FXC RRI User Manual
- Nokia MetroHopper Radio with FIU 19 / RRIC User Manual
- Nokia MetroHopper OU Quick Reference Guide

Product Overview describes the basic features and applications of the Nokia MetroHopper Radio. It presents general information about the product and describes also features that will be implemented in future.

Quick Reference Guide is a short installation instruction for the product, and it is included in the product package.

The following Nokia MetroSite document sales items are related to the Nokia MetroHopper documentation:

- Nokia FlexiHopper Microwave Radio with FC RRI / FXC RRI User Manual
- Nokia MetroHub Transmission Node User Manual
- Nokia MetroSite GSM Base Station User Manual
- Nokia MetroSite NED (CD-ROM)

The *Nokia MetroSite NED* contains all Nokia MetroSite User Manuals.

The following document is helpful in the transmission planning of Nokia MetroHopper links:

- Route Design for Radio Links above 17 GHz

© Nokia Networks Oy

4 Conventions used in the documents

4.1 User manual identification

For identification and version management purposes, the user manual and all documents in it are coded according to specific principles. The code and the version of the user manual can be found on the binder label. The code for NED can be found on the back cover of the CD-ROM package.

4.2 Document identification

All documents are identified by number, version, and language. These elements combined form a document indentifier.

Example of a document identifier :

DN98123 Issue 1-0 en

- *DN98123* is the document number
- *1* is the issue number, which is increases when the contents of the document are changed; *0* is the editorial number, which increases when the document format is corrected without changes being made to documents.
- *en* is the language code, corresponding to standard ISO 639

In paper documents, the document identifier is located in the lower left corner of the page. In electronic documents, the document identifier can be viewed by clicking the icon in the upper right corner at the beginning of each document. When the document is printed, the document indentifier and name appear on each page.

© Nokia Networks Oy

4.3 Typographic conventions

Icons and different fonts are used to emphasise special elements of a document. The icons are located in the left side of the text.

Warnings

Warnings alert the reader to dangers which may cause loss of life, physical injury or ill health.

WARNING

This is a warning!

Cautions

Cautions are used to indicate possible damage to equipment but not danger to personnel.

Caution

This is a caution!

Notes

Notes are used to call attention to a certain piece of information.

Note

This is a note.

Task sequences

Task sequence symbol is used to indicate the beginning of a task sequence.

Task sequence title

1. Step 1
2. Step 2

© Nokia Networks Oy

3. Step 3

The following table presents the typographic conventions used in *Nokia MetroHopper with FC RRI / FXC RRI User Manual*:

Table 2. Typographic conventions

Convention	Meaning
Italic font	Indicates a word or phrase that is emphasised, or a reference to the title of a document, example: See document *Commissioning and Maintenance*.
Bold font	Indicates the title of a window, or an option, command, field or group, or anything that you must type exactly as it appears, examples: **Help Index** → means: on the **Help** menu, click **Index.** **A:\install** means: type A:\install.

© Nokia Networks Oy

© Nokia Networks Oy

NOKIA

Nokia MetroHopper Radio with FC RRI/FXC RRI

Installation Overview

User Manual B0

C33512.22

© Nokia Networks Oy

The information in this document is subject to change without notice and describes only the product defined in the introduction of this documentation. This document is intended for the use of Nokia Networks' customers only for the purposes of the agreement under which the document is submitted, and no part of it may be reproduced or transmitted in any form or means without the prior written permission of Nokia Networks. The document has been prepared to be used by professional and properly trained personnel, and the customer assumes full responsibility when using it. Nokia Networks welcomes customer comments as part of the process of continuous development and improvement of the documentation.

The information or statements given in this document concerning the suitability, capacity, or performance of the mentioned hardware or software products cannot be considered binding but shall be defined in the agreement made between Nokia Networks and the customer. However, Nokia Networks has made all reasonable efforts to ensure that the instructions contained in the document are adequate and free of material errors and omissions. Nokia Networks will, if necessary, explain issues which may not be covered by the document.

Nokia Networks' liability for any errors in the document is limited to the documentary correction of errors. Nokia Networks WILL NOT BE RESPONSIBLE IN ANY EVENT FOR ERRORS IN THIS DOCUMENT OR FOR ANY DAMAGES, INCIDENTAL OR CONSEQUENTIAL (INCLUDING MONETARY LOSSES), that might arise from the use of this document or the information in it.

This document and the product it describes are considered protected by copyright according to the applicable laws.

NOKIA logo is a registered trademark of Nokia Corporation.

Other product names mentioned in this document may be trademarks of their respective companies, and they are mentioned for identification purposes only.

Copyright © Nokia Networks Oy 2000. All rights reserved.

Nokia MetroHopper, Nokia MetroHub, and Nokia MetroSite are trademarks of Nokia Networks Oy.

Contents

Contents 3

1 About this document 7

2 Precautions 9

3 Work order 11

4 Protective grounding 13

© Nokia Networks Oy

© Nokia Networks Oy

Summary of changes

Document	Date	Comment
C33512011SE_00	29 Oct 1999	
DN99611437 Issue 1-0 en	28 Dec 1999	New document numbering scheme adopted.
DN99611437 Issue 2-0 en	30 May 2000	FC RRI added.

© Nokia Networks Oy

© Nokia Networks Oy

1 About this document

This document gives general instructions on installing Nokia MetroHopper outdoor unit. Detailed instructions for installing the outdoor unit can be found in *Nokia MetroHopper Outdoor Unit Installation* included in this manual.

Installation instructions for FC RRI and FXC RRI can be found in *Nokia MetroSite GSM Base Station User Manual* and *Nokia MetroHub User Manual*.

© Nokia Networks Oy

© Nokia Networks Oy

2 Precautions

The instructions are intended for trained installation personnel. Before starting the installation, note the following precautions:

- Familiarise yourself thoroughly with the installation instructions.
- Plan the installation in advance.
- Take the precautions given in the beginning of the outdoor unit installation document into account.

© Nokia Networks Oy

© Nokia Networks Oy

3 Work order

The following is the recommended task list for the installation of Nokia MetroHopper with FC RRI or FXC RRI. The document detailing the task is indicated after the task.

1. Prepare the cabling.
2. Install the alignment bracket (see *Nokia MetroHopper OU Installation*).
3. Perform the alignment (see *Nokia MetroHopper OU Installation*).
4. Attach the radio section (see *Nokia MetroHopper OU Installation*).
5. Connect cables to the OU (see *Nokia MetroHopper OU Installation*).
6. Connect the Flexbus cable(s) to the FC RRI or FXC RRI indoor unit (see *Nokia MetroSite GSM Base Station User Manual* or *Nokia MetroHub User Manual*).

Note

If it is likely that moisture will condense in the outdoor unit, do not leave it outdoors without power.

© Nokia Networks Oy

© Nokia Networks Oy

4 Protective grounding

To ensure safe installation conditions for both personnel and equipment, the grounding of and equipment station must be done before installing the equipment. The purpose of protective grounding is to keep the potential of the equipment at the same level as the potential of the surrounding ground. This prevents generation of dangerous voltages between the equipment and the ground. Because of the high locations of the radio and base station equipment, equipment stations are particularly suspectible to lightning strokes.

The grounding should be done according to the rules and regulations issued by the local authorities. Refer also to site level documentation, if applicable.

Note

To ensure the operation of the equipment, all equipment of an equipment station must be connected to the same grounding potential.

Follow the grounding instructions presented in the *Nokia MetroHopper Outdoor Unit Installation* document.

Ground the sheath of the Flexbus cable between the indoor unit and the outdoor unit at approximately 50 m intervals. Ground the sheath also at the inlet to the equipment space. National regulations may require grounding every 20 m.

© Nokia Networks Oy

© Nokia Networks Oy

NOKIA

Nokia MetroHopper Radio with FC RRI/FXC RRI

Installation

User Manual B0

C33512.22

© Nokia Networks Oy

The information in this document is subject to change without notice and describes only the product defined in the introduction of this documentation. This document is intended for the use of Nokia Networks' customers only for the purposes of the agreement under which the document is submitted, and no part of it may be reproduced or transmitted in any form or means without the prior written permission of Nokia Networks. The document has been prepared to be used by professional and properly trained personnel, and the customer assumes full responsibility when using it. Nokia Networks welcomes customer comments as part of the process of continuous development and improvement of the documentation.

The information or statements given in this document concerning the suitability, capacity, or performance of the mentioned hardware or software products cannot be considered binding but shall be defined in the agreement made between Nokia Networks and the customer. However, Nokia Networks has made all reasonable efforts to ensure that the instructions contained in the document are adequate and free of material errors and omissions. Nokia Networks will, if necessary, explain issues which may not be covered by the document.

Nokia Networks' liability for any errors in the document is limited to the documentary correction of errors. Nokia Networks WILL NOT BE RESPONSIBLE IN ANY EVENT FOR ERRORS IN THIS DOCUMENT OR FOR ANY DAMAGES, INCIDENTAL OR CONSEQUENTIAL (INCLUDING MONETARY LOSSES), that might arise from the use of this document or the information in it.

This document and the product it describes are considered protected by copyright according to the applicable laws.

NOKIA logo is a registered trademark of Nokia Corporation.

Other product names mentioned in this document may be trademarks of their respective companies, and they are mentioned for identification purposes only.

Copyright © Nokia Networks Oy 2000. All rights reserved.

Nokia MetroHopper is a trademark of Nokia Networks Oy. Any other trademarks mentioned in the documents are the property of their respective owners.

Contents

Contents 3

1 About this document 7

2 Precautions 9
2.1 Precautions **9**
2.2 Installation restrictions **9**

3 Work order 11
3.1 Parts **11**
3.2 Tools **11**
3.3 Task list **12**

4 Installing Nokia MetroHopper outdoor unit 13
4.1 Mounting the alignment bracket on a pole **13**
4.2 Mounting the alignment bracket on a wall **14**
4.3 Attaching the optical alignment tool **15**
4.4 Coarse alignment **16**
4.5 Fine alignment **17**
4.6 Finishing alignment **19**
4.7 Attaching the radio section **19**
4.8 Alignment with AGC voltage **20**
4.9 Uninstalling the outdoor unit **21**

5 Connecting interfaces 23
5.1 Grounding **24**
5.2 Connecting the Flexbus cable **24**
5.3 Connecting the synchronisation cable **25**
5.4 Closing the connector cover **25**

© Nokia Networks Oy

© Nokia Networks Oy

Summary of changes

Document	Date	Comment
C33512006SE_00	24 Jun 1999	
C33512006SE_A0	30 Aug 1999	Instructions updated
C33512006SE_B0	29 Oct 1999	Instructions updated
DN99592289 Issue 1-0 en	28 Dec 1999	New document numbering scheme adopted.
DN99592289 Issue 2-0 en	11 Feb 2000	

© Nokia Networks Oy

© Nokia Networks Oy

1 About this document

This document gives instructions on how to install Nokia MetroHopper Outdoor Unit (OU). The document covers the following topics:

- precautions and installation restrictions
- tools and work order
- installing Nokia MetroHopper OU
- connecting interfaces

The OU can be used with different types of indoor units. The instructions presented in this document apply irrespective of the indoor unit used.

Refer to the *Installation Overview* part of this manual for general work order and precautions when installing Nokia microwave radios. Refer to the model-specific *Indoor Unit Installation* part when installing radio indoor units.

© Nokia Networks Oy

© Nokia Networks Oy

2 Precautions

This chapter describes the issues you must take into account before installing the outdoor unit. Familiarise yourself thoroughly with the installation instructions before starting the installation.

2.1 Precautions

Before starting installation, note the following pre-requisites:

- Transmission and installation have been planned.
- The far-end radio is installed or the installation space for the far-end radio has been planned. In case of reduced visibility it is advisable to mark the far-end location clearly.
- If it is likely that moisture will condense in the outdoor unit, do not leave it outdoors without power.
- The outdoor unit must not be stored outdoors without packaging.

Caution

Never connect or disconnect the Flexbus cable when the power is on. Damage to the equipment may result.

2.2 Installation restrictions

Refer to Chapter 7 ('Installation planning') in *Product Description* for important site requirements related information.

© Nokia Networks Oy

© Nokia Networks Oy

3 Work order

This chapter lists the parts and tools needed when installing Nokia MetroHopper outdoor unit and presents a suggested work order.

3.1 Parts

The following items are needed when installing the Nokia MetroHopper outdoor unit:

- radio section (included in the package)
- alignment bracket with clamp (included in the package)
- Flexbus cable (RG-223 or RG-214) with a TNC connector (waterproof)
- grounding wire
- synchronisation cables (*optional*)
- cable ties.

3.2 Tools

The following tools and equipment are recommended when installing the Nokia MetroHopper outdoor unit:

- optical alignment tool
- 5 mm Allen key
- 6 mm Allen key
- torque wrench, 17 - 20 Nm
- two 10 mm spanners
- cable strippers and cable ties

© Nokia Networks Oy

- protective clothing, helmet
- drill in case of wall installation
- two suitable wall bolts in case of wall installation
- DC voltage meter and a cable with BNC connector in case the alignment is done with AGC voltage measurement.

3.3 Task list

Plan the work in advance. The following work order is recommended for the installation of the Nokia MetroHopper outdoor unit:

Prepare the cabling beforehand so that the cables can be connected to the outdoor unit immediately after it has been installed.

1. Mount the alignment bracket (see 4.1 and 4.2)
2. Attach the optical alignment tool (see 4.3).
3. Perform the coarse alignment (pre-alignment) (see 4.4).
4. Perform the fine alignment (see 4.5).
5. Finish the alignment (see 4.6).
6. Attach the radio section (see 4.7).
7. Connect the grounding wire (see 5.1).
8. Connect the Flexbus cable (see 5.2).
9. Connect the synchronisation cable, if needed (see 5.3).
10. Close the connector cover (see 5.4).

© Nokia Networks Oy

4 Installing Nokia MetroHopper outdoor unit

This chapter gives instructions for installing and uninstalling the Nokia MetroHopper outdoor unit.

4.1 Mounting the alignment bracket on a pole

To install the alignment bracket on a pole:

1. Place the bracket and the clamp around the pole. The diameter of the pole may vary from 30 to 120 mm. Diameters over 120 mm require the use of an adapter.
2. Align the bracket roughly towards the far end.
3. Tighten the mounting bolts with the 6 mm Allen key.
4. Tighten the bolts to 17 – 20 Nm with a torque wrench.

© Nokia Networks Oy

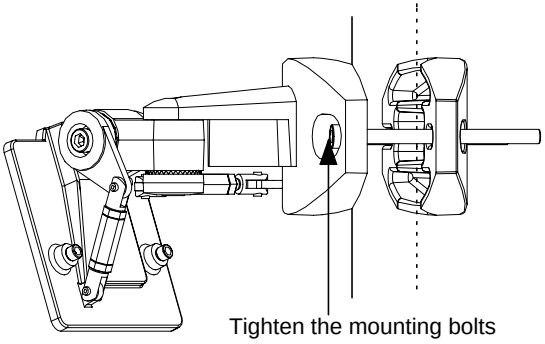

Figure 1. Installing the alignment bracket on a pole

4.2 Mounting the alignment bracket on a wall

The same alignment bracket can be used for pole and wall installation. In wall installation, remove the clamp of the alignment bracket. After installing the alignment bracket, the installation procedure is exactly the same in both pole and wall installation.

To install the alignment bracket on a wall:

1. Drill the holes for wall installation.
2. Remove the clamp.
3. Install the bracket on a wall with two suitable bolts (not supplied with the package).

© Nokia Networks Oy

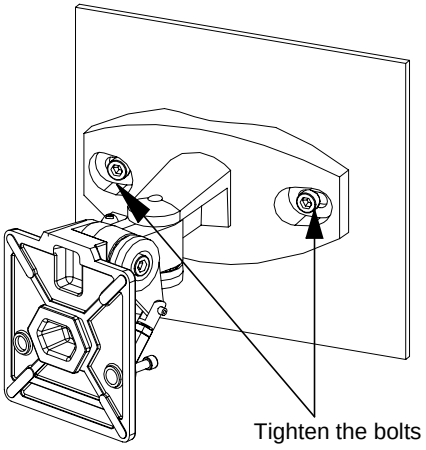

Figure 2. Installing the alignment bracket on a wall

4.3 Attaching the optical alignment tool

Note

The use of the optical alignment tool is strongly recommended in order to attain the required level of accuracy.

To attach the optical alignment tool:

1. Place the optical alignment tool on the bracket.
2. Tighten the M6 screws with 5 mm Allen key.

© Nokia Networks Oy

4.4 Coarse alignment

To pre-align:

1. Loosen the locking (M8) screws with 6 mm Allen key.
2. Turn on the optical alignment tool. You may adjust the brightness of the red dot visible inside the optical alignment tool.
3. View the far end with the optical alignment tool and aim the red dot towards thecentre of the far-end radio.
4. Align the bracket towards the far end.
5. Tighten the M8 screws to approximately 10 Nm.

© Nokia Networks Oy

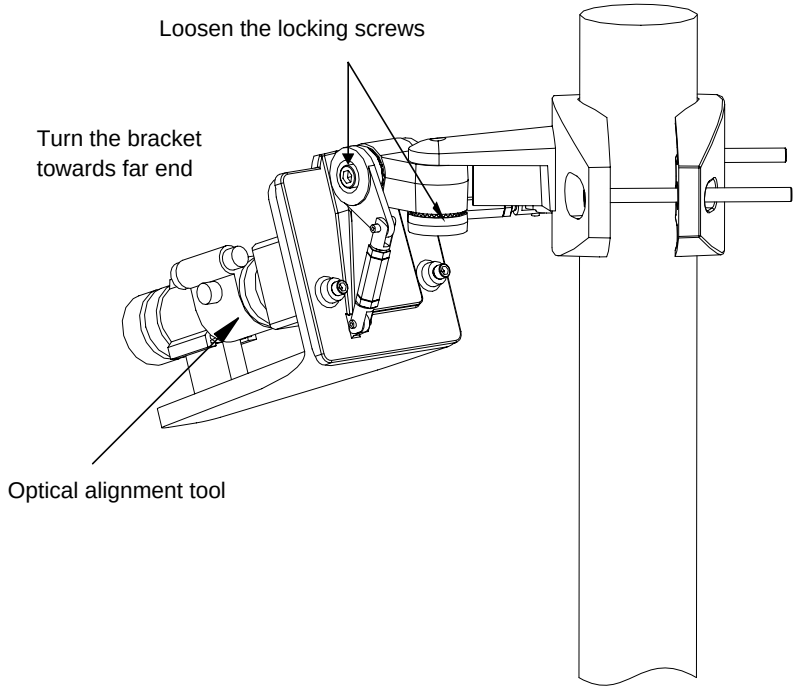

Figure 3. Coarse alignment (pre-alignment)

4.5 Fine alignment

To fine-align:

1. Loosen the locking nuts with 10 mm spanner.
2. View the far end with the optical alignment tool. Align the bracket towards the far end by adjusting the fine alignment bars shown in Figure 4.

© Nokia Networks Oy

3. Tighten the locking nuts. Hold the fine alignment bar in place with a spanner and tighten the nut with another spanner.

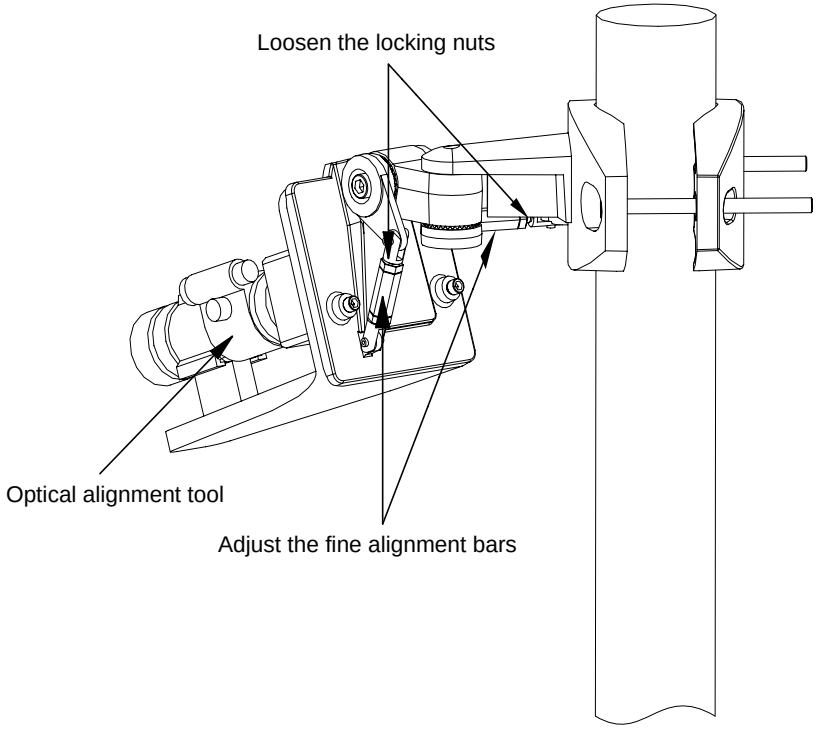

Figure 4. Fine alignment

© Nokia Networks Oy

4.6 Finishing alignment

To finish the alignment:

1. Tighten the locking screws with a torque wrench to 17 – 20Nm. Tighten first the joint that is closer to the installation pole.
2. Check the alignment with the optical alignment tool.
3. Switch the optical alignment tool off. Unscrew the M6 screws with 5 mm Allen key and remove the alignment tool.

4.7 Attaching the radio section

To attach the radio section:

1. Place the radio section on the alignment bracket.
2. Tighten the M6 screws with 5 mm Allen key.

© Nokia Networks Oy

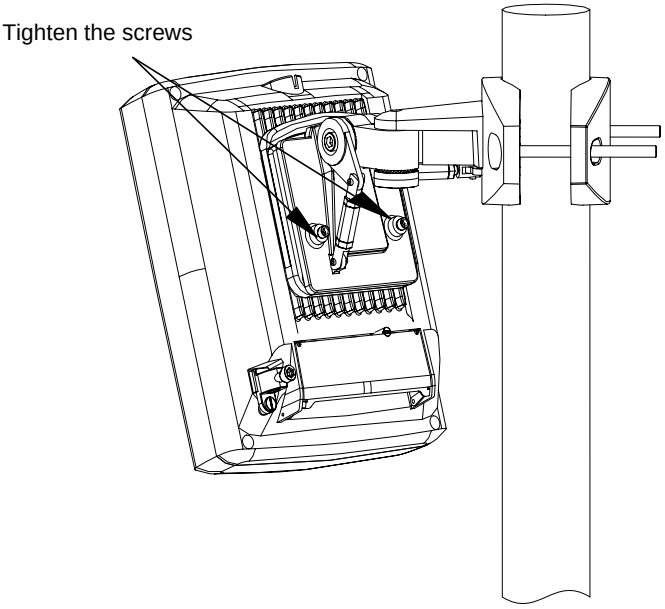

Figure 5. Attaching the radio section

4.8 Alignment with AGC voltage

In order to obtain maximum alignment accuracy, Nokia MetroHopper can be fine aligned also by measuring the AGC (Automatic Gain Control) voltage which is inversely proportional to the input level of the signal received from the radio hop. Alignment with AGC voltage can be performed during commissioning. For more information, refer to *Commissioning and Maintenance* document.

To align by measuring AGC voltage:

1. Connect a DC voltage meter to the AGC connector via an adapter or a cable with BNC connector (male).

2. Loosen the locking screws to approximately 10 Nm.

© Nokia Networks Oy

3. Adjust the fine alignment bars with a spanner as described in Section 4.5 until you find the *minimum* AGC voltage value. See Table 1 for approximate voltage values at different Rx input levels.

4. Lock the fine alignment bars.

5. Tighten the locking screws back to a torque of 17 – 20 Nm. Tighten first the joint that is closer to the installation pole.

6. Remove the DC voltage meter.

Table 1. AGC voltage levels in proportion to the receiver input level

Rx input level	AGC voltage
0 dBm	0.0 V
-10 dBm	0.5 V
-20 dBm	1.1 V
-30 dBm	1.6 V
-40 dBm	2.2 V
-50 dBm	2.7 V
-60 dBm	3.3 V
-70 dBm	3.8 V
-80 dBm	4.4 V
-90 dBm	5.0 V

4.9 Uninstalling the outdoor unit

If you need to remove or replace a radio, follow the instructions below. If the replacement of the radio is done carefully the alignment will not be affected.

Caution

Switch the Flexbus OU power supply off (with the node manager) before removing an outdoor unit.

© Nokia Networks Oy

To uninstall a radio:

1. Turn the power supply to the OU off with Nokia Hopper Manager (Refer to *Commissioning and Maintenance* for more information).
2. Disconnect the Flexbus cable (see Section 5.2).
3. Disconnect the grounding wire (see Section 5.1).
4. Disconnect the synchronisation cable, if in use (see Section 5.3).
5. Open the M6 screws of the alignment bracket with 5 mm Allen key (see Section 4.7).
6. Remove the radio section from the alignment bracket.

To uninstall an alignment bracket:

- In case of pole installation, open the mounting bolts with 6 mm Allen key and remove the alignment bracket from the pole.
- In case of wall installation, open the wall bolts with a suitable tool and remove the alignment bracket.

© Nokia Networks Oy

5 Connecting interfaces

This chapter gives instructions on how to connect the interfaces of Nokia MetroHopper outdoor unit. The interfaces are shown in Figure6.

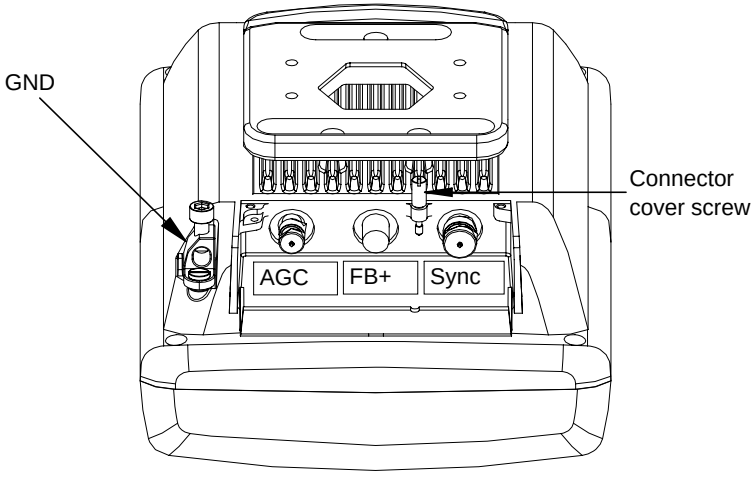

Figure 6. MetroHopper OU interfaces

© Nokia Networks Oy

5.1 Grounding

The radio section must be connected to an external grounding electrode immediately after installation. The grounding wire is of type 16 mm^2 Cu.

To connect the grounding wire:

1. Peel the tip of the grounding wire (15 mm).
2. Connect the grounding wire to the grounding clamp of the outdoor unit and tighten the M6 screw.
3. Connect the other end of the grounding wire to the general grounding wire or bar of the installation pole.

Caution

Make sure that general grounding is performed according to regulations issued by the local authorities.

5.2 Connecting the Flexbus cable

A clamp-type (watertight) straight TNC connector fitted into, for example, RG–223 cable can be used to connect the IU and the OU. Leave the cable slack enough to allow the outdoor unit to be turned during the alignment. It is advisable to label the cables (for example with the hop ID) in order to facilitate identification later. In case the cables are completed on site, protect the connectors from water with adhesive tape or shrink-on wrapping. The ready-made cables have a shrink-wrap protection.

Caution

If the cable is already connected to the indoor unit, make sure the Flexbus OU power supply is switched off before connecting the cable to the outdoor unit. Power can be switched off using the manager software.

© Nokia Networks Oy

To connect the IU - OU Flexbus cable:

1. Connect the TNC connector of the Flexbus cable to the FB+ interface. Tighten theconnector manually (0.5 Nm).

2. Tie the cable to the installation pole with cable ties or with special holders (FIMO, for example).

If the Flexbus cable is taken to the radio but left unplugged, protect the connector.

Ground the sheath of the Flexbus cable between the indoor unit and the outdoor unit at approximately 50 m intervals. Ground the sheath also at the inlet to the equipment space. National regulations may require grounding every 20 m.

5.3 Connecting the synchronisation cable

If synchronisation is required, remove the connector cap and connect the synchronisation cable to Sync-connector. See *Product Description* for further details on planning the synchronisation.

5.4 Closing the connector cover

After connecting all the required cables, close the connector cover and tighten the screw.

© Nokia Networks Oy

© Nokia Networks Oy

NOKIA

Nokia MetroHopper Radio with FC RRI/ FXC RRI

Master Index

C33512.22

© Nokia Networks Oy

The information in this document is subject to change without notice and describes only the product defined in the introduction of this documentation. This document is intended for the use of Nokia Networks' customers only for the purposes of the agreement under which the document is submitted, and no part of it may be reproduced or transmitted in any form or means without the prior written permission of Nokia Networks. The document has been prepared to be used by professional and properly trained personnel, and the customer assumes full responsibility when using it. Nokia Networks welcomes customer comments as part of the process of continuous development and improvement of the documentation.

The information or statements given in this document concerning the suitability, capacity, or performance of the mentioned hardware or software products cannot be considered binding but shall be defined in the agreement made between Nokia Networks and the customer. However, Nokia Networks has made all reasonable efforts to ensure that the instructions contained in the document are adequate and free of material errors and omissions. Nokia Networks will, if necessary, explain issues which may not be covered by the document.

Nokia Networks' liability for any errors in the document is limited to the documentary correction of errors. Nokia Networks WILL NOT BE RESPONSIBLE IN ANY EVENT FOR ERRORS IN THIS DOCUMENT OR FOR ANY DAMAGES, INCIDENTAL OR CONSEQUENTIAL (INCLUDING MONETARY LOSSES), that might arise from the use of this document or the information in it.

This document and the product it describes are considered protected by copyright according to the applicable laws.

NOKIA logo is a registered trademark of Nokia Corporation.

Other product names mentioned in this document may be trademarks of their respective companies, and they are mentioned for identification purposes only.

Copyright © Nokia Networks Oy 2000. All rights reserved.

Index

key to index: **index entry**
Manual/**binder**, section in binder, *document title*, **page number**
Main index entry
Subentry:
Manual/**binder**, section in binder, *document title*, **page number**

58 GHz band:
User Manual B0 **1,** 6.0, *Product Description,* **13**

A

adjacent channel interference:
User Manual B0 **1,** 6.0, *Product Description,* **60**

AGC
alignment:
User Manual B0 **1,** 4.0, *Installation,* **20**

alarm list:
User Manual B0 **1,** 5.0, *Commissioning and Maintenance,* **23**

alignment:
User Manual B0 **1,** 6.0, *Product Description,* **14**

alignment
coarse alignment:
User Manual B0 **1,** 4.0, *Installation,* **16**
fine alignment:
User Manual B0 **1,** 4.0, *Installation,* **17**
with AGC voltage:
User Manual B0 **1,** 4.0, *Installation,* **20**

alignment bracket
mounting on a pole:
User Manual B0 **1,** 4.0, *Installation,* **13**
mounting on a wall:
User Manual B0 **1,** 4.0, *Installation,* **14**

alignment tool
attaching:
User Manual B0 **1,** 4.0, *Installation,* **15**

antenna:
User Manual B0 **1,** 6.0, *Product Description,* **64**

antenna radiation pattern:
User Manual B0 **1,** 6.0, *Product Description,* **65**

application planning:
User Manual B0 **1,** 6.0, *Product Description,* **18**

applications:
User Manual B0 **1,** 6.0, *Product Description,* **25**

attaching radio section:
User Manual B0 **1,** 4.0, *Installation,* **19**

attenuation:
User Manual B0 **1,** 6.0, *Product Description,* **18**

automatic channel selection:
User Manual B0 **1,** 6.0, *Product Description,* **15**
User Manual B0 **1,** 6.0, *Product Description,* **17**

B

BER measurement:
User Manual B0 **1,** 6.0, *Product Description,* **13**

branching Q1 bus:
User Manual B0 **1,** 6.0, *Product Description,* **39**

burst synchronisation:
User Manual B0 **1,** 6.0, *Product Description,* **18**

C

capacity:
User Manual B0 **1,** 6.0, *Product Description,* **57**

chaining Q1 bus:
User Manual B0 **1,** 6.0, *Product Description,* **39**
User Manual B0 **1,** 6.0, *Product Description,* **41**

channel bandwidth:
User Manual B0 **1,** 6.0, *Product Description,* **13**

channel selection:
User Manual B0 **1,** 5.0, *Commissioning and Maintenance,* **11**

channel spacing:
User Manual B0 **1,** 6.0, *Product Description,* **59**

co-channel interference:
User Manual B0 **1,** 6.0, *Product Description,* **59**

 © Nokia Networks Oy

commissioning:
User Manual B0 **1,** 5.0, *Commissioning and Maintenance,* **9**

commissioning
Nokia BTS Manager:
User Manual B0 **1,** 5.0, *Commissioning and Maintenance,* **10**
Nokia MetroHub Manager:
User Manual B0 **1,** 5.0, *Commissioning and Maintenance,* **13**
Radio Wizard:
User Manual B0 **1,** 5.0, *Commissioning and Maintenance,* **10**
verifying:
User Manual B0 **1,** 5.0, *Commissioning and Maintenance,* **16**

commissioning report:
User Manual B0 **1,** 6.0, *Product Description,* **15**

connecting
Flexbus cable:
User Manual B0 **1,** 4.0, *Installation,* **24**
grounding wire:
User Manual B0 **1,** 4.0, *Installation,* **24**
synchronisation cable:
User Manual B0 **1,** 4.0, *Installation,* **25**

connecting interfaces:
User Manual B0 **1,** 4.0, *Installation,* **23**

connector cover
closing:
User Manual B0 **1,** 4.0, *Installation,* **25**

cross-connection level:
User Manual B0 **1,** 6.0, *Product Description,* **57**

cross-connections:
User Manual B0 **1,** 6.0, *Product Description,* **16**

D

DDD:
User Manual B0 **1,** 6.0, *Product Description,* **13**

demodulation:
User Manual B0 **1,** 6.0, *Product Description,* **59**

dimensions
outdoor unit:
User Manual B0 **1,** 6.0, *Product Description,* **63**

Doubly Differential Detection:
User Manual B0 **1,** 6.0, *Product Description,* **13**

E

EMC:
User Manual B0 **1,** 6.0, *Product Description,* **58**

environmental specifications:
User Manual B0 **1,** 6.0, *Product Description,* **58**

error counters:
User Manual B0 **1,** 5.0, *Commissioning and Maintenance,* **18**

expansion unit:
User Manual B0 **1,** 6.0, *Product Description,* **49**

F

fading margin measurement:
User Manual B0 **1,** 6.0, *Product Description,* **15**

fault codes:
User Manual B0 **1,** 5.0, *Commissioning and Maintenance,* **23**

fault handling:
User Manual B0 **1,** 6.0, *Product Description,* **42**

FC RRI
dimensions:
User Manual B0 **1,** 6.0, *Product Description,* **67**
features:
User Manual B0 **1,** 6.0, *Product Description,* **20**
installation options:
User Manual B0 **1,** 6.0, *Product Description,* **67**
interfaces:
User Manual B0 **1,** 6.0, *Product Description,* **66**
mechanical structure:
User Manual B0 **1,** 6.0, *Product Description,* **47**
power supply:
User Manual B0 **1,** 6.0, *Product Description,* **67**
site configurations:
User Manual B0 **1,** 6.0, *Product Description,* **28**

FEC:
User Manual B0 **1,** 6.0, *Product Description,* **18**

fine alignment:
User Manual B0 **1,** 4.0, *Installation,* **17**

finishing alignment:
User Manual B0 **1,** 4.0, *Installation,* **19**

FIU 19
auxiliary interfaces:
User Manual B0 **1,** 6.0, *Product Description,* **22**
dimensions:
User Manual B0 **1,** 6.0, *Product Description,* **71**

 © Nokia Networks Oy

features:
User Manual B0 **1,** 6.0, *Product Description,* **21**
installation options:
User Manual B0 **1,** 6.0, *Product Description,* **71**
interfaces:
User Manual B0 **1,** 6.0, *Product Description,* **69**
mechanical structure:
User Manual B0 **1,** 6.0, *Product Description,* **49**
power supply:
User Manual B0 **1,** 6.0, *Product Description,* **71**
site configurations:
User Manual B0 **1,** 6.0, *Product Description,* **29**

Flexbus:
User Manual B0 **1,** 6.0, *Product Description,* **15**

Flexbus
cable type:
User Manual B0 **1,** 6.0, *Product Description,* **66**
interface:
User Manual B0 **1,** 6.0, *Product Description,* **21**
settings:
User Manual B0 **1,** 5.0, *Commissioning and Maintenance,* **10**

forward error correction:
User Manual B0 **1,** 6.0, *Product Description,* **18**

frequency range:
User Manual B0 **1,** 6.0, *Product Description,* **59**

Fresnel zone:
User Manual B0 **1,** 6.0, *Product Description,* **53**

FXC RRI
dimensions:
User Manual B0 **1,** 6.0, *Product Description,* **69**
features:
User Manual B0 **1,** 6.0, *Product Description,* **20**
installation options:
User Manual B0 **1,** 6.0, *Product Description,* **69**
interfaces:
User Manual B0 **1,** 6.0, *Product Description,* **68**
mechanical structure:
User Manual B0 **1,** 6.0, *Product Description,* **48**
power supply:
User Manual B0 **1,** 6.0, *Product Description,* **69**
site configurations:
User Manual B0 **1,** 6.0, *Product Description,* **28**

G

grounding:
User Manual B0 **1,** 3.0, *Installation Overview,* **13**

H

hop ID:
User Manual B0 **1,** 5.0, *Commissioning and Maintenance,* **11**

I

identifications:
User Manual B0 **1,** 5.0, *Commissioning and Maintenance,* **14**

installation planning:
User Manual B0 **1,** 6.0, *Product Description,* **53**

installation pole:
User Manual B0 **1,** 6.0, *Product Description,* **55**

installing
OU:
User Manual B0 **1,** 4.0, *Installation,* **13**

installing OU
task list:
User Manual B0 **1,** 4.0, *Installation,* **12**

interfaces
FC RRI:
User Manual B0 **1,** 6.0, *Product Description,* **47**
FIU 19:
User Manual B0 **1,** 6.0, *Product Description,* **50**
Flexbus:
User Manual B0 **1,** 4.0, *Installation,* **24**
FXC RRI:
User Manual B0 **1,** 6.0, *Product Description,* **48**
RRIC:
User Manual B0 **1,** 6.0, *Product Description,* **52**
synchronisation:
User Manual B0 **1,** 4.0, *Installation,* **25**

interleaving:
User Manual B0 **1,** 5.0, *Commissioning and Maintenance,* **15**
User Manual B0 **1,** 6.0, *Product Description,* **18**

international recommendations:
User Manual B0 **1,** 6.0, *Product Description,* **74**

L

line-of-sight:
User Manual B0 **1,** 6.0, *Product Description,* **53**

loop protection:
User Manual B0 **1,** 6.0, *Product Description,* **35**

 © Nokia Networks Oy

loopbacks:
User Manual B0 **1,** 5.0, *Commissioning and Maintenance,* **19**

M

manuals
delivery media:
User Manual B0 **1,** 2.0, *Guide to Documentation,* **11**

master:
User Manual B0 **1,** 5.0, *Commissioning and Maintenance,* **15**
User Manual B0 **1,** 6.0, *Product Description,* **17**

measurements
monitoring:
User Manual B0 **1,** 5.0, *Commissioning and Maintenance,* **18**

mechanical structure
FC RRI:
User Manual B0 **1,** 6.0, *Product Description,* **47**
FIU 19:
User Manual B0 **1,** 6.0, *Product Description,* **49**
FXC RRI:
User Manual B0 **1,** 6.0, *Product Description,* **48**
outdoor unit:
User Manual B0 **1,** 6.0, *Product Description,* **46**
RRIC:
User Manual B0 **1,** 6.0, *Product Description,* **51**

modulation:
User Manual B0 **1,** 6.0, *Product Description,* **13**
User Manual B0 **1,** 6.0, *Product Description,* **59**

monitoring
measurements:
User Manual B0 **1,** 5.0, *Commissioning and Maintenance,* **18**
performance:
User Manual B0 **1,** 5.0, *Commissioning and Maintenance,* **16**
User Manual B0 **1,** 5.0, *Commissioning and Maintenance,* **17**

MSK modulation:
User Manual B0 **1,** 6.0, *Product Description,* **13**

N

NED:
User Manual B0 **1,** 2.0, *Guide to Documentation,* **11**

Network Management System:
User Manual B0 **1,** 6.0, *Product Description,* **37**

NMS:
User Manual B0 **1,** 6.0, *Product Description,* **37**

Nokia BTS Manager:
User Manual B0 **1,** 6.0, *Product Description,* **38**

Nokia Hopper Manager:
User Manual B0 **1,** 6.0, *Product Description,* **38**

Nokia Hopper Manager
system requirements:
User Manual B0 **1,** 6.0, *Product Description,* **73**

Nokia MetroHub:
User Manual B0 **1,** 6.0, *Product Description,* **28**

Nokia MetroHub Manager:
User Manual B0 **1,** 6.0, *Product Description,* **38**

Nokia MetroSite BTS:
User Manual B0 **1,** 6.0, *Product Description,* **28**

Nokia SiteWizard:
User Manual B0 **1,** 5.0, *Commissioning and Maintenance,* **7**

O

operation mode:
User Manual B0 **1,** 6.0, *Product Description,* **57**

ordering documents:
User Manual B0 **1,** 2.0, *Guide to Documentation,* **11**

outdoor unit
features:
User Manual B0 **1,** 6.0, *Product Description,* **13**
interfaces:
User Manual B0 **1,** 6.0, *Product Description,* **63**
mechanical structure:
User Manual B0 **1,** 6.0, *Product Description,* **45**
power supply:
User Manual B0 **1,** 5.0, *Commissioning and Maintenance,* **14**
User Manual B0 **1,** 6.0, *Product Description,* **46**
settings:
User Manual B0 **1,** 5.0, *Commissioning and Maintenance,* **14**

oxygen absorption:
User Manual B0 **1,** 6.0, *Product Description,* **13**

 © Nokia Networks Oy

P

performance monitoring:
User Manual B0 **1,** 5.0, *Commissioning and Maintenance,* **17**

power consumption
outdoor unit:
User Manual B0 **1,** 6.0, *Product Description,* **63**

power supply
FC RRI:
User Manual B0 **1,** 6.0, *Product Description,* **47**
FIU 19:
User Manual B0 **1,** 6.0, *Product Description,* **51**
FXC RRI:
User Manual B0 **1,** 6.0, *Product Description,* **48**
outdoor unit:
User Manual B0 **1,** 6.0, *Product Description,* **63**
RRIC:
User Manual B0 **1,** 6.0, *Product Description,* **52**

precautions
installing outdoor unit:
User Manual B0 **1,** 4.0, *Installation,* **9**

preventive maintenance:
User Manual B0 **1,** 5.0, *Commissioning and Maintenance,* **17**

Q

Q1 address:
User Manual B0 **1,** 6.0, *Product Description,* **42**

Q1 branching:
User Manual B0 **1,** 6.0, *Product Description,* **39**

Q1 bus:
User Manual B0 **1,** 6.0, *Product Description,* **39**

Q1 group address:
User Manual B0 **1,** 6.0, *Product Description,* **42**

Q1 signal:
User Manual B0 **1,** 6.0, *Product Description,* **39**

R

RBER:
User Manual B0 **1,** 6.0, *Product Description,* **57**

receiver bandwidth:
User Manual B0 **1,** 6.0, *Product Description,* **60**

receiver BER thresholds:
User Manual B0 **1,** 6.0, *Product Description,* **61**

removing
OU:
User Manual B0 **1,** 4.0, *Installation,* **21**

replacing equipment:
User Manual B0 **1,** 5.0, *Commissioning and Maintenance,* **21**

RRIC
dimensions:
User Manual B0 **1,** 6.0, *Product Description,* **73**
features:
User Manual B0 **1,** 6.0, *Product Description,* **24**
installation options:
User Manual B0 **1,** 6.0, *Product Description,* **73**
interfaces:
User Manual B0 **1,** 6.0, *Product Description,* **72**
mechanical structure:
User Manual B0 **1,** 6.0, *Product Description,* **51**
power supply:
User Manual B0 **1,** 6.0, *Product Description,* **73**
site configurations:
User Manual B0 **1,** 6.0, *Product Description,* **33**

S

settings
Flexbus:
User Manual B0 **1,** 5.0, *Commissioning and Maintenance,* **10**
User Manual B0 **1,** 5.0, *Commissioning and Maintenance,* **14**
outdoor unit:
User Manual B0 **1,** 5.0, *Commissioning and Maintenance,* **14**

site configurations
FC RRI:
User Manual B0 **1,** 6.0, *Product Description,* **28**
FIU 19:
User Manual B0 **1,** 6.0, *Product Description,* **29**
FXC RRI:
User Manual B0 **1,** 6.0, *Product Description,* **28**
RRIC:
User Manual B0 **1,** 6.0, *Product Description,* **33**

slave:
User Manual B0 **1,** 5.0, *Commissioning and Maintenance,* **15**
User Manual B0 **1,** 6.0, *Product Description,* **17**

spurious outputs:
User Manual B0 **1,** 6.0, *Product Description,* **61**

 © Nokia Networks Oy

statistics:
User Manual B0 **1,** 5.0, *Commissioning and Maintenance,* **18**
User Manual B0 **1,** 6.0, *Product Description,* **57**

statistics
reading:
User Manual B0 **1,** 5.0, *Commissioning and Maintenance,* **18**

synchronisation:
User Manual B0 **1,** 6.0, *Product Description,* **18**

synchronising master:
User Manual B0 **1,** 6.0, *Product Description,* **18**

T

TDD:
User Manual B0 **1,** 6.0, *Product Description,* **14**

technical specifications:
User Manual B0 **1,** 6.0, *Product Description,* **57**

Time Division Duplex:
User Manual B0 **1,** 6.0, *Product Description,* **14**

time division duplex:
User Manual B0 **1,** 6.0, *Product Description,* **17**

tool list
outdoor unit:
User Manual B0 **1,** 4.0, *Installation,* **11**

transmitter mode:
User Manual B0 **1,** 5.0, *Commissioning and Maintenance,* **14**

Tx frequency stability:
User Manual B0 **1,** 6.0, *Product Description,* **59**

TX power:
User Manual B0 **1,** 6.0, *Product Description,* **60**

typographic conventions:
User Manual B0 **1,** 2.0, *Guide to Documentation,* **14**

U

uninstalling
OU:
User Manual B0 **1,** 4.0, *Installation,* **21**

user manual
contents:
User Manual B0 **1,** 2.0, *Guide to Documentation,* **9**

W

work order
installing outdoor unit:
User Manual B0 **1,** 4.0, *Installation,* **11**

© Nokia Networks Oy

NOKIA

Nokia MetroHopper Radio with FC RRI/FXC RRI

Glossary

User Manual B0

C33512.22

© Nokia Networks Oy

© Nokia Networks Oy

Abbreviations

2M	2 Mbit/s
8k	8 kbit/s
AGC	Automatic Gain Control
AIS	Alarm Indication Signal
AT	Available Time
BBE	Background Block Error
BER	Bit Error Ratio
BNC	Bayonet-lock RF coaxial connector
BQ	Bayonet-lock 4-pin connector
BSC	Base Station Controller
BTS	Base Transceiver Station
C/I	Carrier to Interference Ratio
CC	Cross-Connection
CEPT	Conference Européenne des Administrations des Postes et des Télécommunications
CPU	Central Processing Unit
DC	Direct Current
DDD	Doubly Differential Detection
DM	Degraded Minute
EB	Errored Block
EMC	Electromagnetic Compatibility
ES	Errored Seconds
ETSI	European Telecommunications Standards Institute
EXU	Expansion Unit
F/B	Front-to-Back (ratio of an antenna)

© Nokia Networks Oy

FB	Flexbus
FBP	Flexbus Plug-in Unit
FC	Fault Code
FC RRI	Integrated radio interface unit for Nokia MetroSite BTS
FE	Functional Entity
FEC	Forward Error Correction
FIU 19	19″ Indoor Unit
FXC RRI	Integrated radio interface unit with enhanced capabilities for Nokia MetroSite BTS and for Nokia MetroHub Transmission Node
GND	Ground
IC	Interface Circuit
ID	Identification
IF	Interface
ITU–R	International Telecommunication Union – Radiocommunication Assembly (former CCIR)
ITU-T	International Telecommunication Union – Telecommunication Standardization Sector (former CCITT)
IU	Indoor Unit
LED	Light-Emitting Diode
LIF	Line Interface
LMP	Local Management Port
MP	Measurement Point
MSC	Mobile Switching Centre
MSK	Minimum-shift Keying
nc	Not connected
NE	Network Element
NMS	Network Management System

© Nokia Networks Oy

NRZ	Non-return-to-Zero
OU	Outdoor Unit
PC	Personal Computer
PDH	Plesiochronous Digital Hierarchy
PMR	Professional Mobile Radio
PRBS	Pseudo–Random Binary Sequence
PWR	Power Supply Connector / power switch
Q1	Nokia’s proprietary management interface (= V.11)
RBER	Residual Bit Error Ratio
RD	Received Data
RF	Radio Frequency
RPE	Radiation Pattern Envelope
RRI	Radio Relay Interface
RRIC	Integrated radio interface unit for Nokia Talk-family base stations
Rx	Receiver
SB	Supervision Block
SDH	Synchronous Digital Hierarchy
SES	Severely Errored Seconds
Sync	Synchronisation
TD	Transmitted Data
TDD	Time Division Duplex
TNC	Threaded RF coaxial connector
TQ	Threaded 4-pin connector
TRU	Base Station Transmission Unit
TRX	Transceiver
TT	Total time

© Nokia Networks Oy

Tx	Transmitter
U	Unit of height, 44.45 mm

Terms

19-inch rack	Rack which is 19 inches wide and conforms to the IEC 297 specification.
adjacent channel interference; ACI	Interference caused by a transmitter operating on an adjacent radio channel. ACI tolerance is expressed in dB as a carrier to interference ratio.
AGC tracking	Ability of the AGC (Automatic Gain Control) circuit to follow fast changes in the level of the received signal.
alignment unit	Set of mounting brackets of the antenna which is used to attach the antenna to the mast and to align it towards the opposite station. An outdoor unit can also be attached to the alignment unit.
bit error ratio; BER	Ratio of the number of bit errors to the total number of bits transmitted in a given time interval.
branching station	Station which distributes one or more transmission channels to other transmission paths.
burst synchronisation	Synchronisation of the TDD bursts of several radios. The synchronisation is achieved by connecting several master radios with the synchronisation bus and selecting one of them to act as the synchronising master unit.
chaining station	Station which transmits into two directions as a part of a transmission chain. Data can be added/dropped to the signals going in either direction. A chaining station where no add/drop occurs is called a *repeater station*.
co-channel interference; CCI	Interference between two signals of the same type on the same radio channel. CCI tolerance is expressed in dB as a carrier to interference ratio.
commissioning	Process of bringing software or hardware into use for the first time.
cross-connection; CC	Connection between input port(s) and output port(s) in a network element. There are different types of cross-connections.
cross-connection bank	Information base which defines the cross-connections of a network element. NE contains two or more banks, one of which is always active.

© Nokia Networks Oy

degraded minute; DM Minute containing an error ratio exceeding 1 x 10^{-6} but not exceeding 1 x 10^{-3}.

duplex spacing Difference between transmitting and receiving frequencies.

errored block; EB Block of bits containing one or more bit errors.

errored second; ES Second containing one or more digital transmission errors, excluding any unavailable time.

FC RRI Radio indoor unit for Nokia MetroHopper and Nokia FlexiHopper.

FC RRI supports one outdoor unit through a Flexbus connection and provides one 2 Mbit/s connection to the BTS. FC RRI is integrated into Nokia MetroSite BTS.

FIU 19 Radio indoor unit for Nokia MetroHopper and Nokia FlexiHopper.

Depending on configuration, FIU 19 supports up to four outdoor units through Flexbus connections. FIU 19 can be installed in any standard 19-inch rack or TM4 slim rack

Flexbus Bidirectional coaxial cable that carries up to 16 x 2 Mbit/s signals and power between transmission units, for example, between radio outdoor unit and indoor unit.

forward error correction; FEC Technique allowing the receiver to correct errors occurring on a transmission channel without requiring retransmission of the data.

front-to-back ratio; F/B ratio For a directional antenna, ratio of field strength in front of the antenna to field strength behind the antenna (180 degrees ±40 degrees). The ratio is measured at a fixed distance from the radiator and expressed in dB.

functional entity; FE Part of a network element, for example, MetroHopper outdoor unit or 4 x 2M plug-in unit.

The functional entities are numbered so that the network element is always FE 0 and numbers 1through254 are reserved for the actual FEs. A functional entity can contain several *supervision blocks (SB)*.

FXC RRI Radio indoor unit for Nokia MetroHopper and Nokia FlexiHopper, which has cross-connection capability at 8 kbit/s level.

FXC RRI supports two outdoor units through Flexbus connections. FXC RRI can be installed in Nokia MetroHub or Nokia MetroSite BTS.

gain Amplification. Gain of an antenna is expressed dBi, decibels over a theoretic, isotropic, uniformingly radiating antenna.

indoor unit Part of the microwave radio which is installed indoors and usually contains the baseband parts.

© Nokia Networks Oy

The indoor unit is installed in, for example, a base station cabinet or a 19-inch rack.

interleaving Distribution of symbols in one block over a plurality of adjacent blocks, whereby burst errors can be corrected more effectively than without interleaving.

2-depth interleaving: symbols are distributed over two blocks.

4-depth interleaving: symbols are distributed over four blocks.

loop protection Protection method where traffic is routed via two routes around a ring.

Loop protection protects against hardware faults as well as disturbances in the propagation path.

loop to equipment Method for testing the operation of an interface in which a signal transmitted from an interface of the equipment is connected back to the equipment.

loop to interface Method for testing the operation of an interface in which a signal fed into an interface is connected to the output of the same interface.

loopback See *loop to equipment* and *loop to interface*.

microwave radio Radio equipment for establishing an aligned and fixed radio connection between two points.

network element; NE Telecommunication equipment having capability for surveillance, reporting and/or control. Identified by a unique management address. Also called a *node*.

Nokia Q1 network element contains two or more *functional entities*. FE number zero refers to the whole network element.

Network Management System; NMS System for controlling and monitoring the resources of a telecommunications network and recording their use and performance, in order to provide telecommunication services.

node See *network element*.

node manager PC software application which allows the user to manage individual network elements.

Nokia FlexiHopper Nokia's family of Flexbus-compatible microwave radios for the 13, 15, 18, 23, 26, and 38 GHz frequency bands.

The radio transmission capacity of Nokia FlexiHopper can be selected using software (from 2 x 2 Mbit/s to 16 x 2 Mbit/s). FlexiHopper outdoor unit can be used with different indoor units (FIU 19, RRIC, FC RRI, and FXC RRI).

Nokia Hopper Manager PC software application for managing Nokia FlexiHopper and Nokia MetroHopper radios connected to FIU 19 or RRIC indoor units.

© Nokia Networks Oy

Nokia MetroHopper

Nokia's Flexbus-compatible radio for the 58 GHz frequency band, which does not require coordinated frequency planning.

Transmission capacity of Nokia MetroHopper is 4 x 2 Mbit/s. MetroHopper outdoor unit can be used with different indoor units (FIU 19, RRIC, FC RRI, and FXC RRI).

Nokia MetroHub

Nokia's compact transmission node with cross-connection and grooming functions. Nokia MetroHub contains one to five transmission units (FXC RRI, for example).

Nokia MetroSite Base Station

Compact 4-TRX GSM base station for Nokia MetroSite Solution. Nokia MetroSite BTS can contain one transmission unit.

Nokia Q1 Connection Tool

Program that allows to make connection definitions and node definitions for identifying objects on a Nokia Q1 managed network.

outdoor unit

Part of the microwave radio which is installed outdoors.

The outdoor unit of Nokia MetroHopper is composed of the radio section and the alignment unit.

product code

Code which is used for identifying sales items: plug-in units, programs, manuals etc.

Q1 bus

Management channel to which Q1-managed devices have been connected.

radio channel spacing

Difference between centre frequencies of two adjacent radio channels.

repeater station

Radio station which receives and retransmits radio signals carrying the same information. See *chaining station*.

return loss

Ratio of incident to reflected power expressed in dB.

RRIC

Radio indoor unit for Nokia MetroHopper and Nokia FlexiHopper.

RRIC supports two outdoor units through Flexbus connections. RRIC can be installed in Nokia Citytalk and Nokia Intratalk BTS.

RS(63,59)

Reed-Solomon algorithm. Code for forward error correction, which uses 4 redundancy symbols for every 59 data symbols and is able to correct two symbol errors in the formed 63-symbol block.

severely errored second; SES

Second with a binary error ratio greater than or equal to 10^{-3}.

site

Location where telecommunication equipment has been installed. Site can contain, for example, a base station and transmission equipment, with an equipment shelter and antenna tower.

© Nokia Networks Oy

Several *network elements* can be located at a site.

spurious emission

Emission on a frequency or frequencies which are outside the necessary bandwidth and the level of which may be reduced without affecting the corresponding transmission of information.

Includes harmonic emissions, parasitic emissions, intermodulation products and frequency conversion products, but excludes out-of-band emission.

supervision block; SB

Part of a functional entity, for example, power supply of the FIU 19 unit.

Each supervision block has its own alarms, statistics, measurements, loops, and so on. The numbering of SBs within a functional entity runs from 0 to 255.

Talk-family

Nokia's product family of GSM Base Transceiver Stations, including Nokia Citytalk, Nokia Intratalk, and Nokia Flexitalk.

Citytalk or Intratalk cabinets can house two RRIC indoor units.

time division duplex (TDD)

Time-division-based duplexing method in which each end of a bi-directional connection alternates between transmitting and receiving bursts of data. TDD application uses the same frequency for both transmission directions.

TM4 rack

CEPT A type slim rack.

TRUx

Base Station Transmission Unit, x denoting the submodel, for example, TRUA in Nokia Talk-family base stations.

virtual node

Image of a real network element on a computer file, managed offline.

© Nokia Networks Oy