Domì

CE 0682

UK CA EAC made in Italy

DOMIP1/U
DOMIP1B/U
DOMIP6/U
DOMIP6B/U
DOMIP18V/U
DOMIP18VB/U

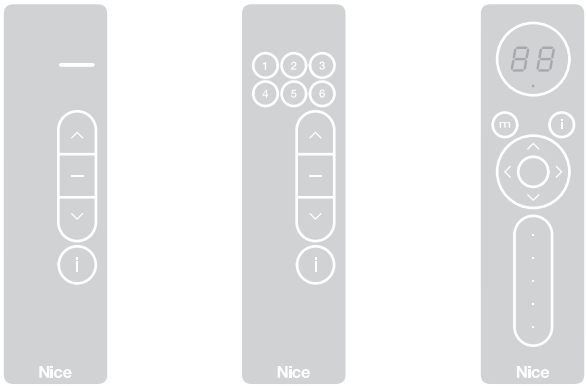

Transmitters

EN - Instructions and warnings for installation and use

Nice

ENGLISH

Translation of the original instructions in full

CONTENTS

1 GENERAL SAFETY WARNINGS AND PRECAUTIONS 2
2 PRODUCT DESCRIPTION AND INTENDED USE 3
2.1 List of constituent parts 3
2.2 Using the buttons 4
2.3 Transmitter functions 4
3 TRANSMITTER VERIFICATION. 4
4 MEMORISING THE TRANSMITTER 4
4.1 Memorisation in “Mode 1” 4
4.2 Memorisation through the “ENABLING Code” (between an OLD transmitter already memorised and a NEW transmitter) 5
4.3 Memorising a transmitter on OXIBD. 5
5 STATUS REQUEST PROCEDURE. 5
6 PROCEDURE FOR SELECTING A GROUP 5
6.1 Transmitters **DOMIP6/U** and **DOMIP6B/U. 5**
6.2 Transmitter **DOMIP18V/U** and **DOMIP18VB/U 6**
7 DELETION PROCEDURES 6
7.1 Delete all 6
7.2 Deleting a group 7
8 “SLIDER” SURFACE 7
9 ENABLING/DISABLING THE ACOUSTIC SIGNAL. 7
10 SIGNALS. 8
10.1 Signals on switch-on 8
10.2 Anomaly signals 8
10.3 BATTERY STATUS INDICATIONS 8
11 REPLACING THE BATTERY 8
12 PRODUCT DISPOSAL 8
12.1 Battery disposal 9
13 TECHNICAL SPECIFICATIONS. 9
14 CONFORMITY 9
14.1 SIMPLIFIED EU DECLARATION OF CONFORMITY 9
14.2 COMPLIANCE WITH THE FCC RULES (PART 15) AND WITH RSS-210 RULES. 9
15 ACCESSORIES. 9

1 GENERAL SAFETY WARNINGS AND PRECAUTIONS

CAUTION! – This manual contains important instructions and warnings for personal safety. Carefully read all parts of this manual. If in doubt, suspend installation immediately and contact the Nice Technical Assistance.

CAUTION! – Important instructions: keep this manual in a safe place to enable future product maintenance and disposal procedures.

- The product packing materials must be disposed of in compliance with local regulations.
- Never apply modifications to any part of the device. Operations other than those specified may only cause malfunctions. The manufacturer declines all liability for damage caused by makeshift modifications to the product.
- Never place the device near to sources of heat and never expose to naked flames. These actions may damage the product and cause malfunctions.
- This product is not intended for use by people (including children) with reduced physical, sensory or mental capabilities or who lack experience and knowledge, unless they have been given supervision or instruction concerning the use of the product by a person responsible for their safety.
- Make sure that children do not play with the product.
- Handle the product with care, being sure not to crush, knock or drop it in order to avoid damage.
- The batteries must be removed from the appliance prior to its disposal.
- The batteries must be disposed of in a safe way.
- Keep the new and used batteries out of reach of children.
- Do not swallow the batteries. Risk of chemical burns.
- If the battery compartment does not close tightly, stop using the product and keep it out of reach of children.
- The manufacturer of this appliance, Nice S.p.A., hereby declares that the product complies with Directive 2014/53/EU.
- The instruction manual and the full text of the EU Declaration of Conformity are available at the following Internet address: www.niceforyou.com, under the “support” and “download” sections.
- For transmitters: 433 MHz: ERP < 10 dBm.

2 PRODUCT DESCRIPTION AND INTENDED USE

DOMI P/U series transmitters are designed for controlling automations for awnings, sun screens, shutters or mixed systems of Nice automations (scenes).

CAUTION! – Any use other than that specified herein or in environmental conditions other than those stated in this manual is to be considered improper and is strictly forbidden!

2.1 LIST OF CONSTITUENT PARTS

"***Figure 1***" shows the main parts making up **DOMI P/U** transmitters.
The **DOMI P** family (Portable versions) consists of six models: **DOMIP1/U** and **DOMIP1B/U** with one button, **DOMIP6/U** and **DOMIP6B/U** with six buttons, and lastly ||nome_prodotto5| |and **DOMIP18VB/U** with display.

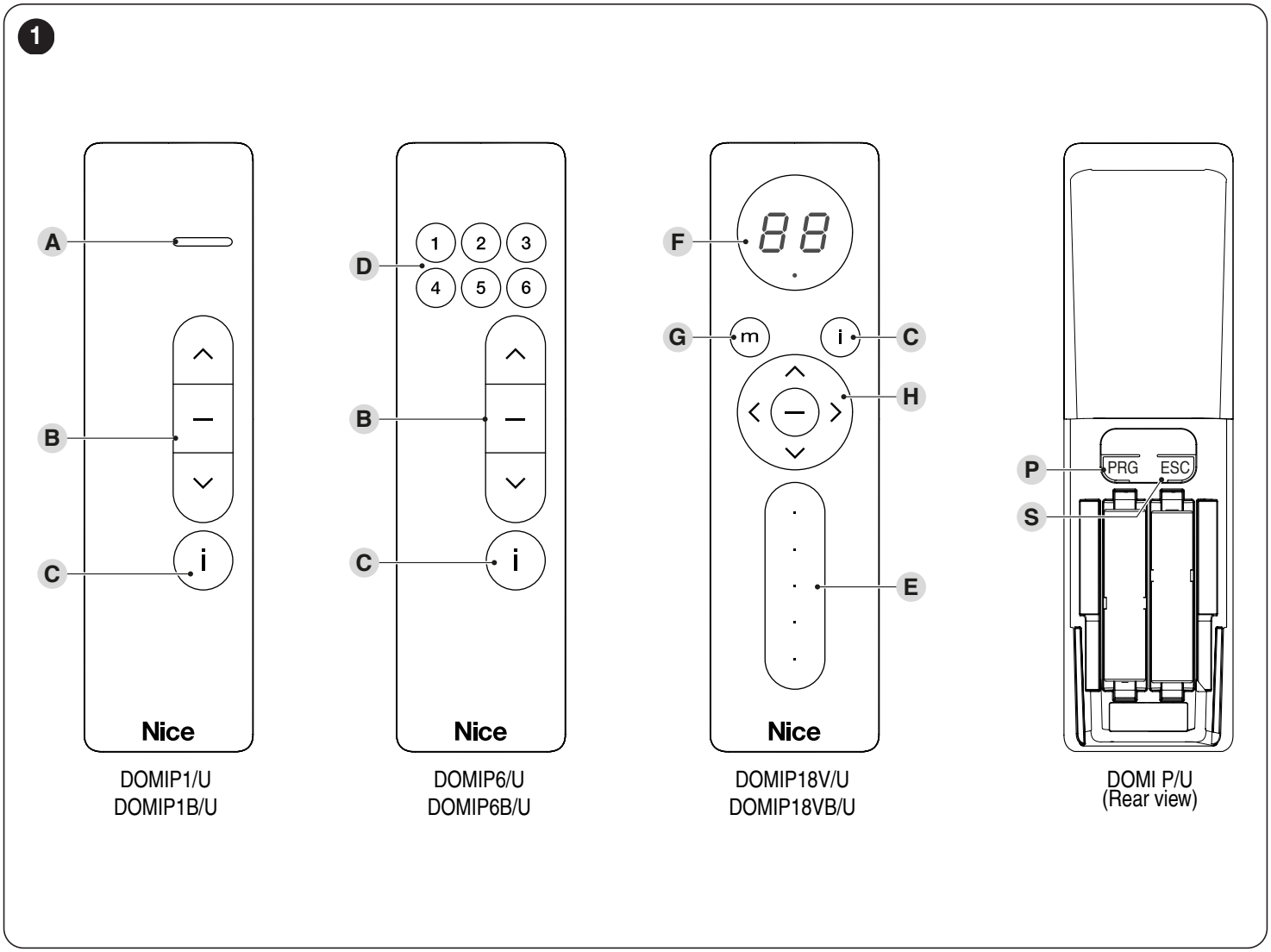

A Automation status LED
B Command transmission buttons (up/opening "∧", stop "–" and down/closing "∨")
C Automation status request button
D Group selection buttons
E Surface with "slider"
F Display
G Partial position button
H Group selector
P-S Programming buttons (accessible from the back of the transmitter after removing the battery's protective casing)

2.2 USING THE BUTTONS

A description on how to use the buttons of **DOMI P/U** transmitters is given below.

B Command transmission buttons
They are used to send up/opening ∧, stop – and down/closing ∨ commands. For models **DOMIP6/U**, **DOMIP6B/U**, **DOMIP18V/U** and **DOMIP18VB/U** select a group before sending the command.

C Automation status request button
Pressing the button causes the automation's status to appear in one of the ways described in the paragraph "***STATUS REQUEST PROCEDURE***" on page 5.

D Group selection buttons
These buttons are present only on models **DOMIP6/U** and **DOMIP6B/U**.. They are used to select the automation (or automations) to which the commands must be addressed. When memorising the transmitter, at least one of these buttons must be programmed, by associating it with at least one automaton (or several automations). All automations associated with the selected group will receive the same commands when the transmitter is being used. The other buttons available can be programmed in a similar way, on the basis of the relevant system's needs (in actual fact, it is like having 6 independent transmitters in a single control device).

E Surface with "slider"

Commands sent via the "slider" can only be used with automations equipped with this function.

The surface with "slider" is only present on models **DOMIP18V/U** and **DOMIP18VB/U**. Commands can be sent to the automation in a simple way by briefly touching this surface or sliding the finger over it. The touching and sliding actions activate different commands depending on the automation being used and the programming modes set. For a detailed outline of the programmable functions, refer to the instruction manual of the receiver/control unit.

F Display
The display is only present on the **DOMIP18V/U** and **DOMIP18VB/U** models and is used to view the active group among the eighteen available.

G Partial position button
This button is only present on the **DOMIP18V/U** and **DOMIP18VB/U** models and is used to send the partial position command to the automation.

H Group selector
This selector is only present on the **DOMIP18V/U** and **DOMIP18VB/U** models and is used to select the automation (or automations) to which the commands must be sent. The display (**F**) shows the group currently selected. When memorising the transmitter, at least one group must be programmed, by associating it with at least one automaton (or several automations). All automations associated with the selected group will receive the same commands when the transmitter is being used. The other buttons available can be programmed in a similar way, on the basis of the relevant system's needs (in actual fact, it is like having 18 independent transmitters in a single control device).

P-S Programming buttons (accessible from the back of the transmitter after removing the battery's protective casing)
On compatible automations (for example for motors and control units belonging to the **Era** series by **Nice**), these buttons are used to simplify the running of programming operations. The **PRG** button speeds up access to the procedures while the **ESC** button speeds up the exit from them. To access the buttons, it is necessary to remove the battery's protective casing. For models **DOMIP6/U**, **DOMIP6B/U**, **DOMIP18V/U** and **DOMIP18VB/U**, while executing the programming procedures, if these buttons must be pressed it is necessary to select a group before sending the command.

2.3 TRANSMITTER FUNCTIONS

DOMI P/U are compatible with receivers that use the "BD" Bidirectional encoding system. The latter system offers the functions, such as:
- the sending of the confirmation (from the receiver to the transmitter) that the transmitted command was received. After the transmission, if all the automations memorised in the group receive the command correctly, the LED lights up **GREEN** and a "beep" is emitted. If the command has NOT been received, by at least one of the automations in the group, the LED lights up **RED**
- sending of the automation's status (for example, whether the shutter is open or closed): consult the paragraph "***STATUS REQUEST PROCEDURE***" on page 5).

3 TRANSMITTER VERIFICATION

Before memorising the transmitter in the automation's receiver, verify that it works properly by pressing any button and simultaneously observing whether LED A (if present) lights up or the button relative to the chosen group lights up (on transmitters without LED) (***Figure 1***).
If LED A (if present) or the button relative to the chosen group (on transmitters without LED) fails to light up, check the condition of the battery and replace it if necessary (consult the paragraph "***REPLACING THE BATTERY***" on page 8).

4 MEMORISING THE TRANSMITTER

To memorise the transmitter in a receiver, the following procedures can be adopted:
- memorisation in "Mode 1"
- memorisation of a new transmitter using a previously memorised transmitter.

These procedures are described in the instruction manual of the receiver or control unit with which the transmitter must be operated. The above-mentioned manuals are also available on the website: www.niceforyou.com.

4.1 MEMORISATION IN "MODE 1"

This mode allows for memorising in the receiver, once only, all the transmitter command buttons, associating them **automatically** with each command managed from the control unit (default commands).

For models DOMIP6/U, DOMIP6B/U, DOMIP18V/U and DOMIP18VB/U select a group before starting the procedure.

Refer to the control unit instructions to identify the type of command that will be paired with each transmitter button.

4.2 MEMORISATION THROUGH THE "ENABLING CODE" (BETWEEN AN OLD TRANSMITTER ALREADY MEMORISED AND A NEW TRANSMITTER)

The **DOMI P/U** transmitter has a secret code, the so-called "ENABLING CODE". By transferring this code from a memorised transmitter to a new transmitter, the latter is recognised (and memorised) automatically by the receiver.
To perform the memorisation procedure:

1. On the OLD transmitter, remove and insert the battery (consult the paragraph "***REPLACING THE BATTERY***" on page 8).
- On models **DOMIP1/U** and **DOMIP1B/U**, LED (**A**) will flash orange.
- On models **DOMIP6/U** and **DOMIP6B/U**, the group selection buttons (**B**) paired with an automation will flash green. Press and release the button (**B**) for the group that contains the enabling code to be transferred. The LED associated with the chosen group will flash orange.
- On model **DOMIP18V/U** and **DOMIP18VB/U**, the display will light up intermittently indicating the number of the first group that is paired with an automation. Using the group selector, select the group for which the code must be transferred.

2. Within 10 seconds, on the NEW transmitter:
- On models **DOMIP1/U** and **DOMIP1B/U**, press and hold the ∧ button.
- On models **DOMIP6/U**, **DOMIP6B/U**, **DOMIP18V/U** and **DOMIP18VB/U**, first select the group in which to memorise the enabling code and then press and hold the ∧ button.

3. The correct reception of the code is signalled by the lighting up green of LED (**A**) or of the selected group (**B**) buttons. Models fitted with a buzzer will emit an acoustic signal.

If LED (A) lights up red, the procedure must be repeated.

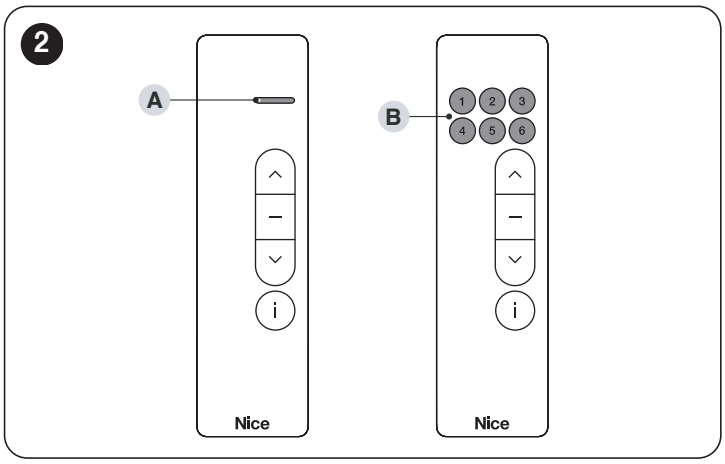

4.3 MEMORISING A TRANSMITTER ON OXIBD

To memorise the transmitter on OXIBD, perform the following steps:

1. Press and hold the OXIBD key until the green LED lights up steady
2. Press and hold the PROG key of the transmitter until, after a series of orange flashes, the LED turns green
3. Release the PROG key
4. Wait for the OXIBD LED to switch off
5. Press the OXIBD receiver key again to activate the desired memorisation procedure (mode I or mode II)
6. Press and release the transmitter control key.

The successful memorisation will be signalled by the transmitter with the lighting up of the green LED.

For models DOMIP6/U, DOMIP6B/U, DOMIP18V/U and DOMIP18VB/U select a group before starting the procedure.

5 STATUS REQUEST PROCEDURE

The following procedure (***Figure 3***) allows for knowing the status of the automation through the transmitter (for example, whether the awning or shutter is open or closed).
To request the status:

1. press and release button (**i**) "Status request". In the event of transmitters with multiple groups, first select the group associated with the automation for which the status is being requested and then press and release button (**i**) "Status request".
2. observe the colour of LED (**A**) (if present) of the colour of the button relative to the selected group (**B**):
- **GREEN:** automation in UP LIMIT SWITCH position in case of awnings, sun screens or shutters; OPEN LIMIT SWITCH in case of gates
- **RED:** automation in DOWN LIMIT SWITCH position in case of awnings, sun screens or shutters; CLOSED LIMIT SWITCH in case of gates
- **ORANGE:** partial opening/closing.

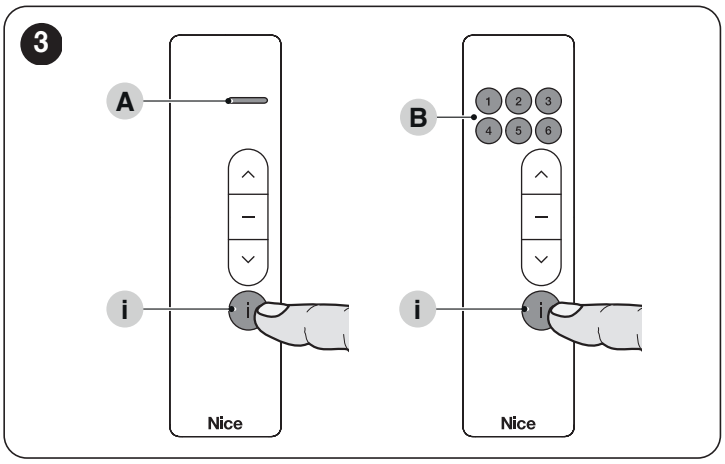

6 PROCEDURE FOR SELECTING A GROUP

With the **DOMIP6/U**, **DOMIP6B/U**, **DOMIP18V/U** and **DOMIP18VB/U** transmitters it is necessary to select a group (i.e. the automations associated with it) before sending the desired command.

6.1 TRANSMITTERS DOMIP6/U AND DOMIP6B/U

To select a group (***Figure 4***):

1. press and release one of the buttons (**A**) for selecting the group
2. the LED relative to the pressed button remains lit **ORANGE** for a few seconds and, before it switches off, it is possible to select other groups to add to the first group selected (for deselecting a group, briefly press the relative button and the LED will switch off)
- when the LEDs relative to the selection made automatically switch off, the selection will remain memorised in the transmitter until a new group (or several groups) is selected. Until the selection remains active (memorised in the transmitter), it is possible to send commands to the associated automations without having to make the selection again.

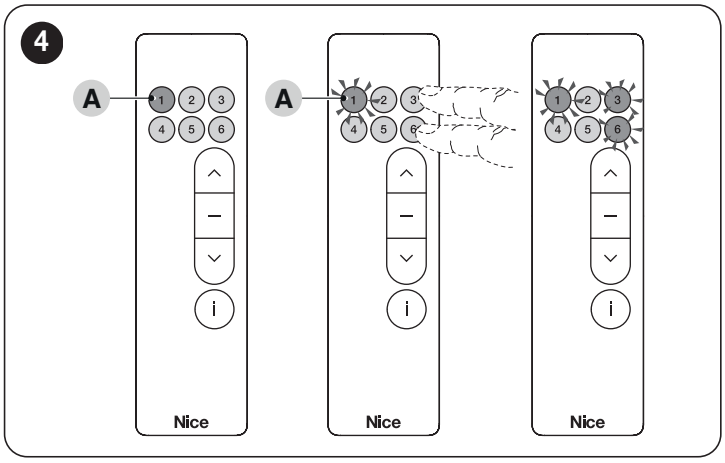

After selecting the desired group, it is possible to send a command (up/open "∧", stop "–" or down/close "∨"). Upon sending the command, the LED relative to the selected group will flash **ORANGE** and after a few seconds (the duration required for sending the response from the automation) it will indicate the outcome of the command (***Figure 5***):

- **Lit GREEN** (and acoustic signal, if enabled): command received correctly by all automations memorised in the group
- **Lit RED**: command NOT received by at least one of the automations memorised in the group.

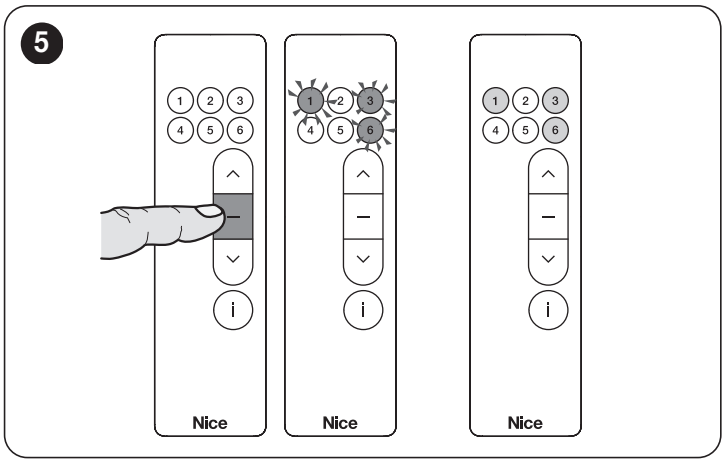

If the command has NOT been received, verify that:

- the automation associated with the transmitter is powered and works correctly
- the chosen group has not already been associated with an automation not present in the installation. In this case it is necessary to delete the group by intervening as described in the paragraph "***Deleting a group***" on page 7.

If the automation requests the "hold-to-run" mode while sending the command, the LED relative to the selected group will rapidly flash ORANGE. The "hold-to-run" mode only works for one group at a time.

6.2 TRANSMITTER DOMIP18V/U AND DOMIP18VB/U

To select a group (***Figure 6***):

1. using the selector (**A**) press "›" or "‹" to choose the desired group among the eighteen available. This will appear on the display (**B**)
2. send the desired command (up/open "∧", stop "–" or down/close "∨") to the associated automations. Until the selection remains active (memorised in the transmitter), it is possible to send commands to the associated automations without having to make the selection again.

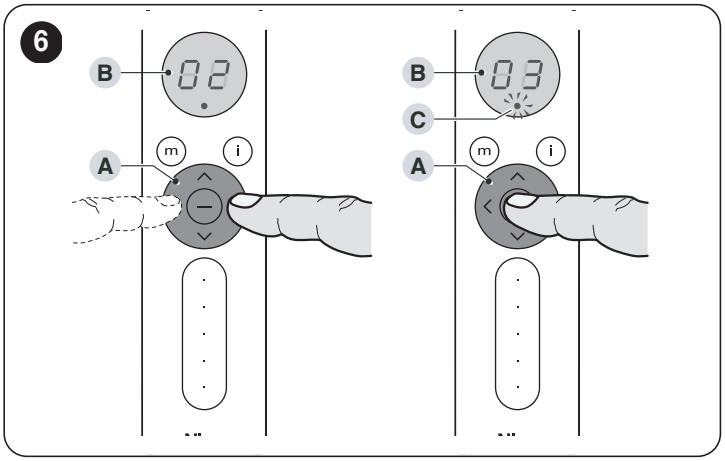

After selecting the desired group, it is possible to send a command (up/open ∧, stop – or down/close ∨). Upon sending the command, LED (**C**) will flash **ORANGE** and after a few seconds (the duration required for sending the response from the automation) it will indicate the outcome of the command:

- **Lit GREEN** (and acoustic signal, if enabled): command received correctly by all automations memorised in the group
- **Lit RED**: command NOT received by at least one of the automations memorised in the group.

If the command has NOT been received, verify that:

- the automation associated with the transmitter is powered and works correctly
- the chosen group has not already been associated with an automation not present in the installation. In this case it is necessary to delete the group by intervening as described in the paragraph "***Deleting a group***" on page 7.

If the automation requests the "hold-to-run" mode while sending the command, LED (C) will rapidly flash ORANGE. The "hold-to-run" mode only works for one group at a time.

7 DELETION PROCEDURES

7.1 DELETE ALL

This procedure can be used to restore the transmitter's factory conditions. At the end of the procedure, all the previously memorised settings will be lost.

To perform the procedure (***Figure 7***):

1. remove the battery's protective casing
2. simultaneously press the "**PRG**", "**ESC**" and "–" buttons until the green LED (**A**) (if present) flashes or the group selection buttons (**B**) flash then release them. Once the flashing stops, LED (**A**) (if present) or the group selection buttons (**B**) light up **RED** for a brief moment
3. simultaneously press the "**PRG**", "**ESC**" and "–" buttons until the red LED (**A**) (if present) flashes or the group (**B**) selection buttons flash, then release them. Once the flashing stops the lighting up **GREEN** of LED (**A**) (if present) or of the group (**B**) selection buttons indicates that the deletion has been made.

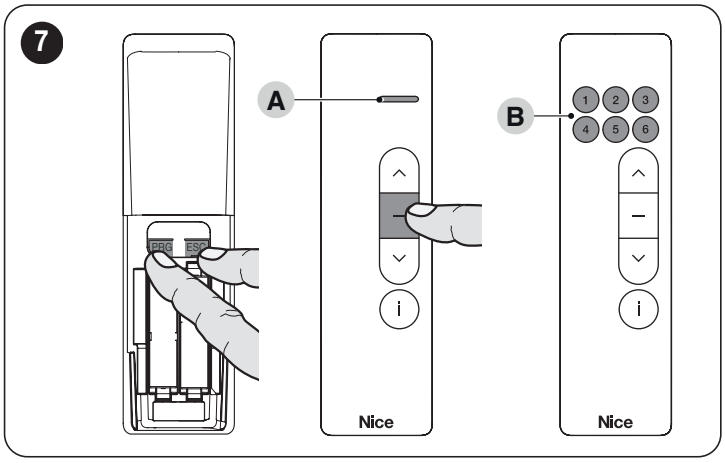

7.2 DELETING A GROUP

This procedure only applies to models DOMIP6/U, DOMIP6B/U, DOMIP18V/U and DOMIP18VB/U. It allows for deleting all automations associated with a group. At the end of the procedure, all settings previously memorised in the group will be lost.

To perform the procedure (***Figure 8***):

1. remove the battery's protective casing
2. press and release button (**A**) relative to the group involved in the deletion process
3. simultaneously press the "**PRG**" and "**ESC**" buttons until button (**A**) relative to the chosen group lights up red then release them. The lighting up **RED** of the group selection button (**A**) indicates that the group has been deleted.

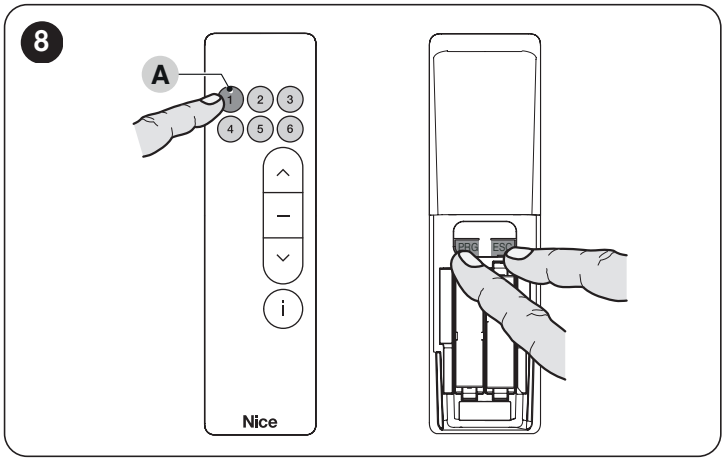

8 "SLIDER" SURFACE

DOMIP18V/U and **DOMIP18VB/U** transmitters are equipped with a "slider" surface that can be used to send commands in an easier way to the automation.

In order to send a command using the "slider" surface, simply touch the surface itself with your finger in the desired point for a brief moment or slide your finger across the surface in the desired direction. On models **DOMIP18V/U** and **DOMIP18VB/U**, before sending a command it is necessary to select the group to which the command must be addressed. After sending the command, wait for the LED (if present) or the buttons of the chosen group to switch off before sending another command.

Commands sent via the "slider" can only be used with automations equipped with this function.

Prolonged pressure on the "slider" surface will put the transmitter in stand-by. To reactivate it simply press the "slider" surface once again or another button.

9 ENABLING/DISABLING THE ACOUSTIC SIGNAL

DOMIP1/U, **DOMIP1B/U**, **DOMIP6/U**, **DOMIP6B/U**, **DOMIP18V/U** and **DOMIP18VB/U** transmitters come with a factory-enabled acoustic signal (beep). It can be disabled or enabled again at any time.

To do this:

1. remove the battery's protective casing
   - to DISABLE the acoustic signal, press "**ESC**" and "∨" simultaneously **twice**

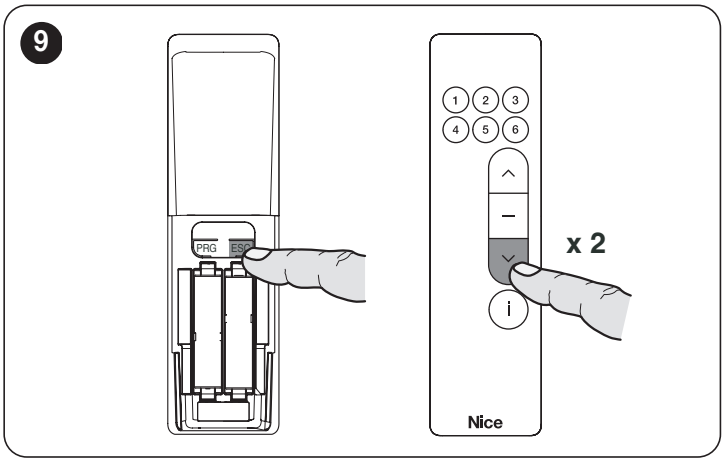

   - to ENABLE the acoustic signal, press "**ESC**" and "∧" simultaneously **twice**.

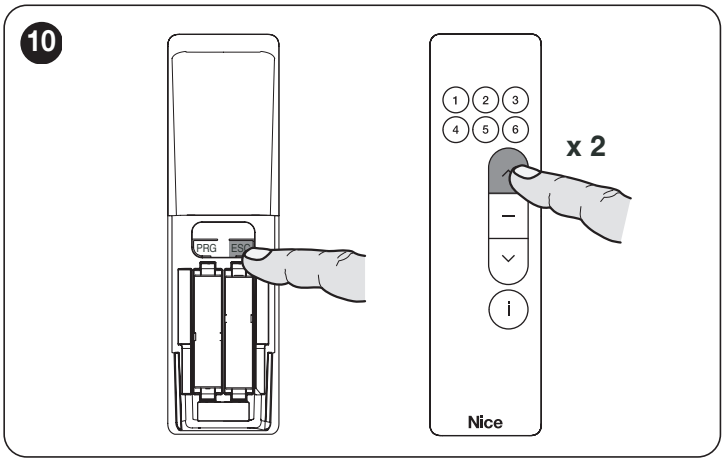

10 SIGNALS

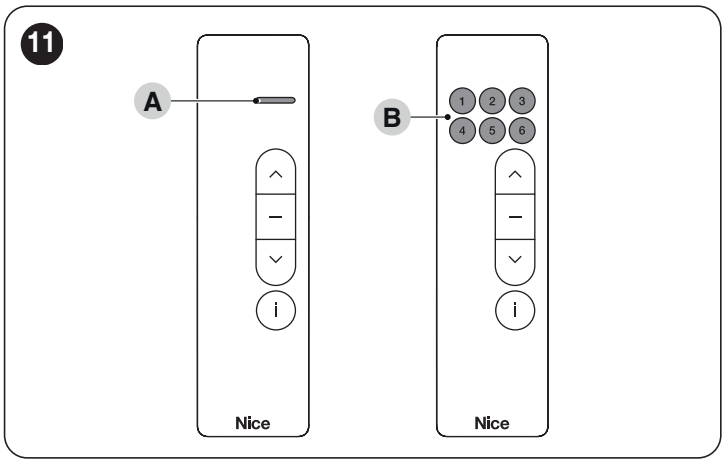

10.1 SIGNALS ON SWITCH-ON

When the battery is inserted, the buzzer (if present) will emit an acoustic signal and the LED (**A**) (if present), or the group selection buttons (**B**) (on transmitters without the LED), will flash (***Figure 11***):
- GREEN, if the transmitter is configured in Bidirectional mode
- RED, if the transmitter is configured in Unidirectional mode.

10.2 ANOMALY SIGNALS

In case of anomalies, LED (**A**) (if present) or the group (**B**) selection buttons (on transmitters without LED) will flash **RED** (***Figure 11***). The possible anomaly cases are listed below:
- transmission attempt without having first selected a group
- "**PROG**" or "**ESC**" button pressed with more than one group selected.

10.3 BATTERY STATUS INDICATIONS

When the battery charge is low, LED (**A**) (if present) or the group (**B**) selection buttons (on transmitters without LED) will start flashing **ORANGE** (***Figure 11***).

11 REPLACING THE BATTERY

Keep the new and used batteries out of reach of children.

Do not swallow the batteries. Risk of chemical burns or even death.

When the battery is flat and a button is pressed, the corresponding signalling LED fades and the transmitter will not transmit. With the battery almost flat, the signalling LED emits red flashes during the transmission process.
To restore normal transmitter operation, replace the battery with a version of the same type, while observing the polarity.
To change the battery (***Figure 12***):
1. remove the protective cover (**A**)
2. remove the battery and replace it with another of the same type.

When inserting the new battery, be careful to respect the polarity.

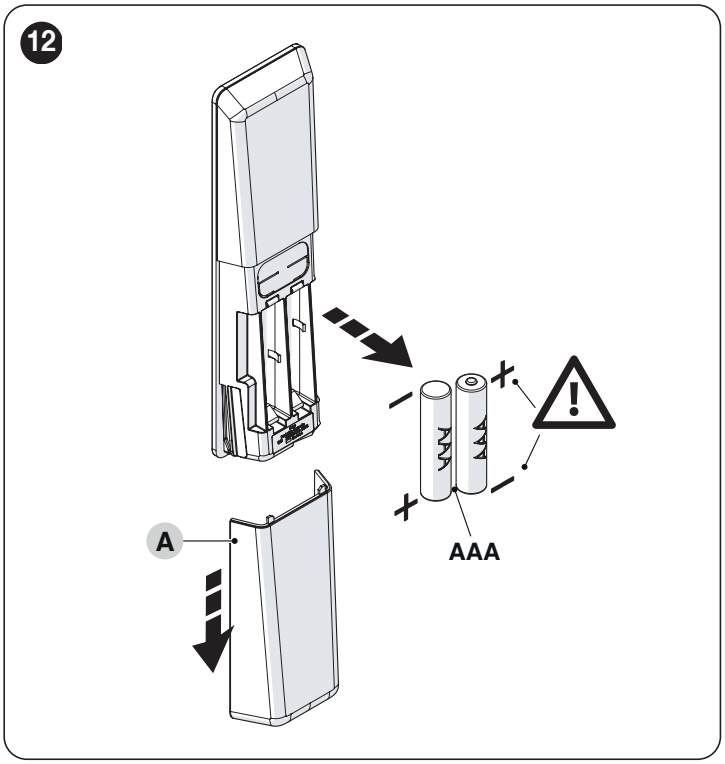

12 PRODUCT DISPOSAL

This product is an integral part of the operator and must therefore be disposed of with it.

As with the installation, only qualified personnel must dismantle the product at the end of its life.
This product is composed of different types of materials. Some of these materials can be recycled; others must be disposed of. Please enquire about the recycling or disposal systems in place in your local area for this type of product.

WARNING

Some parts of the product may contain polluting or dangerous substances. If not disposed of correctly, these substances may have a damaging effect on the environment and human health.

As indicated by the symbol shown here, this product must not been disposed of with household waste. Separate the waste for disposal and recycling, following the methods stipulated by local regulations, or return the product to the seller when purchasing a new product.

WARNING

Local regulations may impose heavy penalties if this product is not disposed of in compliance with the law.

12.1 BATTERY DISPOSAL

WARNING

The batteries must be removed from the appliance prior to its disposal.

The batteries must be disposed of in a safe way.

The flat battery contains toxic substances and must not be disposed of with common waste. Dispose of according to separate waste collection methods as envisaged by current local standards.

13 TECHNICAL SPECIFICATIONS

All technical specifications stated in this section refer to an ambient temperature of 20°C (± 5°C). Nice S.p.A. reserves the right to apply modifications to the product at any time when deemed necessary, without altering its functions and intended use.

The range of transmitters and the reception capacity of the receivers are heavily affected by other devices (alarms, headphones, etc.) operating on the same frequency in your area. Under such conditions, Nice S.p.A. cannot provide any guarantee with regard to the actual range of its devices.

Table 1

TECHNICAL SPECIFICATIONS	TECHNICAL SPECIFICATIONS
Description	**Technical specification**
	DOMI P/U
Product type	Bidirectional transmitter
Power supply	alkaline battery 2 x 1.5Vdc type AAA
Battery life	approx. 3 years, with 10 command transmissions per day
Frequency	433.92 MHz
Radiated power (ERP)	< 10 mW
Radio encoding	BD
Operating temperature	-5°C ... +55 °C
Protection rating	IP 40 (suitable for use at home indoors or in outdoor areas under cover)
Dimensions	155x43x23 mm
Weight	75 g

14 CONFORMITY

14.1 SIMPLIFIED EU DECLARATION OF CONFORMITY

The manufacturer, Nice S.p.A., declares that the product **DOMIP1/U**, **DOMIP1B/U**, **DOMIP6/U**, **DOMIP6B/U**, **DOMIP18V/U** and **DOMIP18VB/U** is compliant with the directive 2014/53/UE.
The full text of the EU declaration of conformity is available at the following internet address: https://www.niceforyou.com/en/support.

14.2 COMPLIANCE WITH THE FCC RULES (PART 15) AND WITH RSS-210 RULES

This device contains licence-exempt transmitter(s)/receiver(s) that comply with Innovation, Science and Economic Development Canada's licence-exempt RSS(s); and with Part 15 of the FCC rules of the United States of America. Operation is subject to the following two conditions: (1) This device may not cause interference. (2) This device must accept any interference, including interference that may cause undesired operation of the device. Any changes or modifications made to this device, without the express permission of the manufacturer, may void the user's authority to operate this device.

15 ACCESSORIES

The transmitters **DOMI P/U** they are equipped with plates for wall positioning.
For mounting the plates to the wall:

1. drill the wall and insert the wall plugs (**A**), which must be chosen in relation to the fixing surface
2. position the plate (**B**) and secure it with the screws (**C**)
3. position the plate cover (**D**).

At this point, the transmitter (**E**) can be fitted in its relevant housing.
(***Figure 13*** - included in the pack)

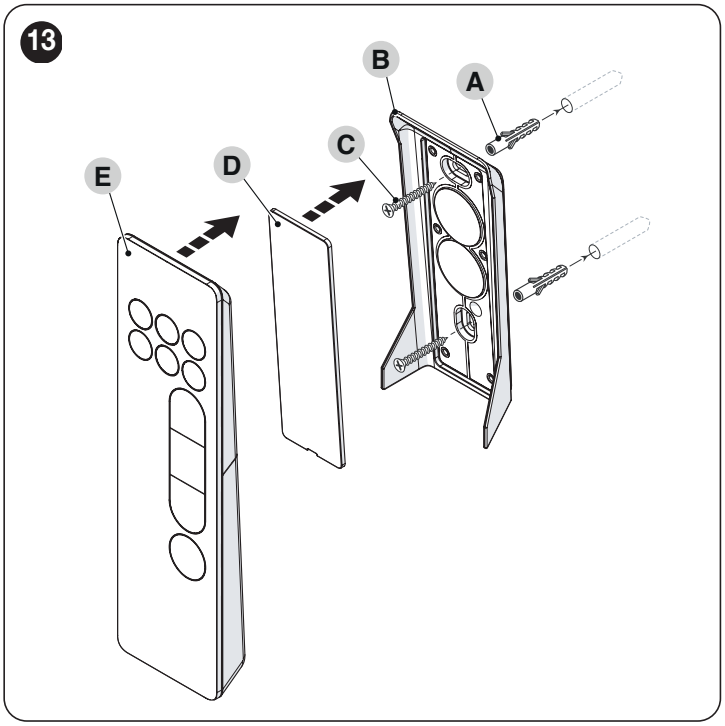

IS0940A00END_23-05-2024

Nice SpA
Via Callalta, 1
31046 Oderzo TV Italy
info@niceforyou.com

www.niceforyou.com