公司名稱:東維成科技股份有限公司

產品型號:EZ1

CGI-810E MAIN BOARD REV.C

Title	Page
Cover Shee t& Block Diagram	1
370PGA Socket	2 , 3
GTL Termination	4
Clock Synthesizer	5
82810-DC100	6 ,7 , 8
LAN8039C	9
System Memory	10
CD Connector	11
ICH0	12 , 13
FWH	14
Super I/O	15
Audio CODEC	16
TV S-Video Out Encoder	17
ATA33 IDE Connectors	18
USB Connectors	19
SYS CON	20
RST/PG	21
Kybrd / Mouse	22
Pullup Resistors and Unused Gates	23
VGA Graphics Connectors	24
DC/DC Voltage Regulators	25
DC/DC PWM_ REG	26
Decoupling	27,28

Block Diagram

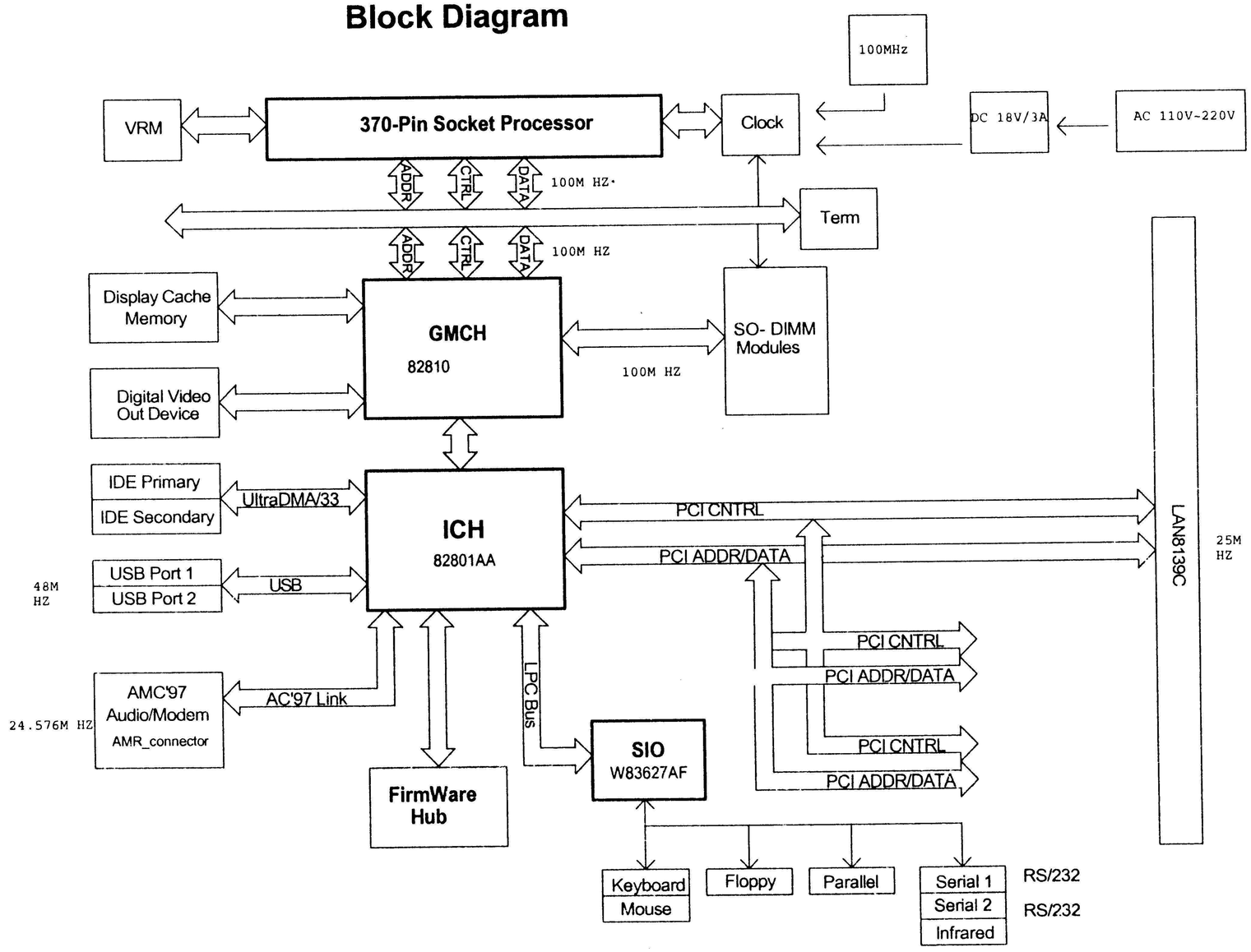

Title	EPC2B
Size: Custom	Document Number: Cover Sheet
Rev	C
Date: Wednesday, February 14, 2001	Sheet 1 of 30