AXIS A41 Series

A4130-E
A4131-E

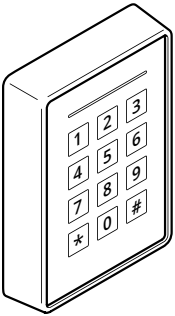

Installation guide
Guide d'installation
Installationsanleitung
Guida all'installazione
Guía de instalación
インストールガイド
Guia de instalação
Руководство по установке
설치가이드
安装指南
Panduan instalasi
Kurulum kılavuzu

Read this first

Read through this installation guide carefully before you install the product. Keep the installation guide for future reference.

Liability

Every care has been taken in the preparation of this document. Please inform your local Axis office of any inaccuracies or omissions. Axis Communications AB cannot be held responsible for any technical or typographical errors and reserves the right to make changes to the product and manuals without prior notice. Axis Communications AB makes no warranty of any kind with regard to the material contained within this document, including, but not limited to, the implied warranties of merchantability and fitness for a particular purpose. Axis Communications AB shall not be liable nor responsible for incidental or consequential damages in connection with the furnishing, performance or use of this material. This product is only to be used for its intended purpose.

Intellectual property rights

Axis AB has intellectual property rights relating to technology embodied in the product described in this document. In particular, and without limitation, these intellectual property rights may include one or more of the patents listed at *axis.com/patent* and one or more additional patents or pending patent applications in the US and other countries.

Equipment modifications

This equipment must be installed and used in strict accordance with the instructions given in the user documentation. This equipment contains no user-serviceable components. Unauthorized equipment changes or modifications will invalidate all applicable regulatory certifications and approvals.

Trademark acknowledgements

AXIS COMMUNICATIONS, AXIS, ARTPEC and VAPIX are registered trademarks of Axis AB in various jurisdictions. All other trademarks are the property of their respective owners.

Regulatory information

Europe

CE

This product complies with the applicable CE marking directives:

- Radio Equipment Directive (RED) 2014/53/EU. See *Radio transmission, on page 3*.
- Restriction of Hazardous Substances (RoHS) Directive 2011/65/EU and 2015/863, including any amendments, updates or replacements. See *Disposal and recycling, on page 4*.

A copy of the original declaration of conformity may be obtained from Axis Communications AB. See *Contact information, on page 5*.

Electromagnetic compatibility (EMC)

This equipment has been designed and tested to fulfill applicable standards for:

- Radio frequency emission when installed according to the instructions and used in its intended environment.
- Immunity to electrical and electromagnetic phenomena when installed according to the instructions and used in its intended environment.

USA

This device complies with part 15 of the FCC Rules. Operation is subject to the following two conditions:

1. This device may not cause harmful interference, and
2. this device must accept any interference received, including interference that may cause undesired operation.

This equipment has been tested and found to comply with the limits for a Class B digital device, pursuant to part 15 of the FCC Rules. These limits are designed to provide reasonable protection against harmful interference in a residential installation. This equipment generates, uses and can radiate radio frequency energy and, if not installed and used in accordance with the instructions, may cause harmful interference to radio communications. However, there is no guarantee that interference will not occur in a particular installation. If this equipment does cause

harmful interference to radio or television reception, which can be determined by turning the equipment off and on, the user is encouraged to try to correct the interference by one or more of the following measures:

- Reorient or relocate the receiving antenna.
- Increase the separation between the equipment and receiver.
- Connect the equipment into an outlet on a circuit different from that to which the receiver is connected.
- Consult the dealer or an experienced radio/TV technician for help.

The product shall be properly grounded.

Contact information
Axis Communications Inc.
300 Apollo Drive
Chelmsford, MA 01824
United States of America
Tel: +1 978 614 2000

Canada
This digital apparatus complies with CAN ICES-3 (Class B). The product shall be properly grounded. Cet appareil numérique est conforme à la norme CAN NMB-3 (classe B). Le produit doit être correctement mis à la terre.

Europe
This digital equipment fulfills the requirements for RF emission according to the Class B limit of EN 55032. The product shall be properly grounded.

Australia/New Zealand
This digital equipment fulfills the requirements for RF emission according to the Class B limit of AS/NZS CISPR 32. The product shall be properly grounded.

Radio transmission

This equipment may generate or use radio frequency energy. The user could lose the authority to operate this equipment if an unauthorized change or modification is made.

USA
This product complies with FCC radiation exposure limits for an uncontrolled environment.

Canada
This device complies with Innovation, Science and Economic Development Canada licence-exempt RSS standard(s). Operation is subject to the following two conditions: (1) this device may not cause interference, and (2) this device must accept any interference, including interference that may cause undesired operation of the device.
This device complies with IC radiation exposure limits for an uncontrolled environment.

Le présent appareil est conforme aux CNR Innovation, Sciences et Développement économique Canada applicables aux appareils radio exempts de licence. L'exploitation est autorisée aux deux conditions suivantes : (1) l'appareil ne doit pas produire de brouillage, et (2) l'utilisateur de l'appareil doit accepter tout brouillage radioélectrique subi, même si le brouillage est susceptible d'en compromettre le fonctionnement.
Ce produit est conforme aux limites d'exposition aux radiations IC pour un environnement non contrôlé.

Europe
Hereby, Axis Communications AB declares that this product is in compliance with the essential requirements and other relevant provisions of Directive 2014/53/EU.

FR
Par la présente Axis Communications AB déclare que l'appareil ce produit est conforme aux exigences essentielles et aux autres dispositions pertinentes de la directive 2014/53/UE.

DE
Hiermit erklärt Axis Communications AB, dass sich dieses Produkt in Übereinstimmung mit den grundlegenden Anforderungen und den anderen relevanten Vorschriften der Richtlinie 2014/53/EU befindet.

IT
Con la presente Axis Communications AB dichiara che questo prodotto è conforme ai requisiti essenziali ed alle altre disposizioni pertinenti stabilite dalla direttiva 2014/53/UE.

ES

Por medio de la presente Axis Communications AB declara que el este producto cumple con los requisitos esenciales y cualesquiera otras disposiciones aplicables o exigibles de la Directiva 2014/53/UE.

FI

Axis Communications AB vakuuttaa täten että tämä tuote tyyppinen laite on direktiivin 2014/53/EU oleellisten vaatimusten ja sitä koskevien direktiivin muiden ehtojen mukainen.

NL

Hierbij verklaart Axis Communications AB dat het toestel in overeenstemming is met de essentiële eisen en de andere relevante bepalingen van richtlijn 2014/53/EU.

SV

Härmed intygar Axis Communications AB att denna produkt står i överensstämmelse med de väsentliga egenskapskrav och övriga relevanta bestämmelser som framgår av direktiv 2014/53/EU.

DA

Undertegnede Axis Communications AB erklærer herved, at følgende udstyr overholder de væsentlige krav og øvrige relevante krav i direktiv 2014/53/EU.

PT

Axis Communications AB declara que este produto está conforme com os requisitos essenciais e outras disposições da Directiva 2014/53/UE.

EL

Με την παρούσα η Axis Communications AB δηλώνει ότι αυτό το προϊόν συμμορφώνεται προς τις ουσιώδεις απαιτήσεις και τις λοιπές σχετικές διατάξεις της οδηγίας 2014/53/ΕΕ.

This equipment can be used in the following countries:

AT, BE, BG, CH, CY, CZ, DE, DK, EE, EL, ES, FI, FR, HR, HU, IE, IS, IT, LI, LT, LU, LV, MT, NL, NO, PL, PT, RO, SE, SI, SK, TR, UK

Safety

Disposal and recycling

When this product has reached the end of its useful life, dispose of it according to local laws and regulations. For information about your nearest designated collection point, contact your local authority responsible for waste disposal. In accordance with local legislation, penalties may be applicable for incorrect disposal of this waste.

Europe

This symbol means that the product shall not be disposed of together with household or commercial waste. Directive 2012/19/EU on waste electrical and electronic equipment (WEEE) is applicable in the European Union member states. To prevent potential harm to human health and the environment, the product must be disposed of in an approved and environmentally safe recycling process. For information about your nearest designated collection point, contact your local authority responsible for waste disposal. Businesses should contact the product supplier for information about how to dispose of this product correctly.

This product complies with the requirements of Directive 2011/65/EU and 2015/863 on the restriction of the use of certain hazardous substances in electrical and electronic equipment (RoHS).

China

This product complies with the requirements of SJ/T 11364-2024, Marking for the restriction of hazardous substances in electrical and electronic products.

有毒有害物质或元素	
部件名称	电气实装部分
铅 (Pb)	X

汞 (Hg)	○
镉 (Cd)	○
六价铬 (Cr(VI))	○
多溴联苯 (PBB)	○
多溴二苯醚 (PBDE)	○
邻苯二甲酸二正丁酯 (DBP)	○
邻苯二甲酸二异丁酯 (DIBP)	○
邻苯二甲酸丁苄酯 (BBP)	○
邻苯二甲酸二（2-乙基）己酯 (DEHP)	○

○ : 表示该有毒有害物质在该部件均质材料中的含量均在GB/T 26572标准规定的限量要求以下。

X: 表示该有毒有害物质至少在该部件的某一均质材料中的含量超出GB/T 26572标准规定的限量要求。

Contact information

Axis Communications AB
Gränden 1
223 69 Lund
Sweden

Tel: +46 46 272 18 00

axis.com

Warranty information

For information about Axis' product warranty and thereto related information, go to *axis.com/warranty*.

Support

Should you require any technical assistance, please contact your Axis reseller. If your questions cannot be answered immediately, your reseller will forward your queries through the appropriate channels to ensure a rapid response. If you are connected to the Internet, you can:

- find answers to resolved problems in the FAQ database, search by product, category, or phrase
- report problems to Axis support staff by logging in to your private support area
- chat with Axis support staff
- visit Axis Support at *axis.com/support*

Cybersecurity

Axis security notification service
Axis provides a notification service with information about vulnerability and other security related matters for Axis devices. To receive notifications, you can subscribe at *axis.com/security-notification-service*.

Vulnerability management
To minimize customers' risk of exposure, Axis, as a **Common Vulnerability and Exposures (CVE) numbering authority (CNA)**, follows industry standards to manage and respond to discovered vulnerabilities in our devices, software, and services. For more information about Axis vulnerability management policy, how to report vulnerabilities, already disclosed vulnerabilities, and corresponding security advisories, see *axis.com/vulnerability-management*.

Secure operation of Axis devices
Axis devices with factory default settings are pre-configured with secure default protection mechanisms. We recommend using more security configuration when installing the device. To learn more about Axis' approach to cybersecurity, including best practices, resources, and guidelines for securing your devices, go to *https://www.axis.com/about-axis/cybersecurity*.

Learn more!

Visit Axis learning center *axis.com/learning* for useful trainings, webinars, tutorials and guides.

Requirements for compliance with UL294

This section contains information and instructions required for UL compliance. To make sure the installation is UL compliant, follow the instructions below in addition to the general information and instructions provided throughout this document. In cases where pieces of information contradict each other, the requirements for UL compliance always replace general information and instructions.

For use with UL294 certified access controllers.

Safety instructions

- The Axis product shall be installed and serviced by a factory trained professional.
- All wiring methods shall be performed in accordance with ANSI/NFPA 70, local codes and authorities having jurisdiction.
- Recommended test method: Verify that the card reader reads cards and provides access.

  Test frequency: once a year.
- There are no replacement parts available for this product.
- For UL294 compliant installations the AXIS A4130-E Reader and AXIS A4131-E Reader should be powered by either certified Axis access controllers or a UL294 listed power supply. All interconnecting devices shall be UL listed and Class 2 low-voltage power limited.
- DC input evaluated for UL294: 12 V DC
- Max current: 140 mA
- Max wiring length: 1000 m (3281 ft)

Impaired operation
The following conditions could result in impaired operation of the reader: The reader can have difficulties reading cards at very low temperatures. The access cards are normally specified to -35° C (-31° F) and should be warmed up if the reader is installed in cold surroundings. The reader can only read one card at a time. Sheet metal behind the access card can result in impaired antenna function and prevent the reader from reading the card. Too low voltage will impair the function of the reader.

Firmware version
AXIS A4130-E Reader and A4131-E Reader have been tested for compatibility with the UL294-listed AXIS A1210 Network Door Controller employing major firmware version 1. Equivalent to other Axis door controllers with major firmware version 1, as well as UL component version 1 in other Axis door controller firmwares.

Performance levels for access control

This section contains performance level information required for UL 294 compliance.

Feature	Level
Destructive attack test	I
Security	I
Endurance	IV
Standby power	I

Wire area

Each wire shall have a conductor cross-sectional area that corresponds to an conductor gauge range of AWG 22–18. Select cables in compliance with your local regulations.

AWG	Diameter mm (in)	Area mm^2
22–18	0.405–1.024 (0.0159–0.0403)	0.129–0.823

Credential types

The following credential types are supported:

- MIFARE Classic®
- MIFARE Plus®

- MIFARE DESFire® EV1
- MIFARE DESFire® EV2
- MIFARE DESFire® EV3

English

Safety information

Hazard levels

⚠ DANGER

Indicates a hazardous situation which, if not avoided, will result in death or serious injury.

⚠ WARNING

Indicates a hazardous situation which, if not avoided, could result in death or serious injury.

⚠ CAUTION

Indicates a hazardous situation which, if not avoided, could result in minor or moderate injury.

NOTICE

Indicates a situation which, if not avoided, could result in damage to property.

Other message levels

Important

Indicates significant information which is essential for the product to function correctly.

Note

Indicates useful information which helps in getting the most out of the product.

Safety instructions

NOTICE

- The Axis product shall be used in compliance with local laws and regulations.
- This product is for professional use.
- Install this product at a safe distance from children.
- Store the Axis product in a dry and ventilated environment.
- Avoid exposing the Axis product to shocks or heavy pressure.
- Do not install the product on unstable poles, brackets, surfaces or walls.
- Use only applicable tools when installing the Axis product. Using excessive force with power tools could cause damage to the product.
- Use a soft cloth dampened with pure lukewarm water to clean the device.
- Don't use chemicals such as window cleaner or acetone to clean your device.
- Use only accessories that comply with the technical specification of your product. These can be provided by Axis or a third party. Axis recommends using Axis power source equipment compatible with your product.
- Use only spare parts provided by or recommended by Axis.
- Do not attempt to repair the product yourself. Contact Axis support or your Axis reseller for service matters.

Transportation

NOTICE

- When transporting the Axis product, use the original packaging or equivalent to prevent damage to the product.

Battery

Lithium coin cell 3.0 V batteries contain 1,2-dimethoxyethane; ethylene glycol dimethyl ether (EGDME), CAS no. 110-71-4.

Dome or front glass

NOTICE

- Don't clean a dome or front glass that looks clean to the eye, and never polish the surface. Excessive cleaning can damage the surface.
- Avoid cleaning the dome or front glass in direct sunlight or at elevated temperatures, since this can cause stains.

Français

Informations sur la sécurité

Niveaux de risques

⚠ DANGER

Indique une situation dangereuse qui, si elle n'est pas évitée, entraînera le décès ou des blessures graves.

⚠ AVERTISSEMENT

Indique une situation dangereuse qui, si elle n'est pas évitée, pourrait entraîner le décès ou des blessures graves.

⚠ ATTENTION

Indique une situation dangereuse qui, si elle n'est pas évitée, pourrait entraîner des blessures légères ou modérées.

AVIS

Indique une situation qui, si elle n'est pas évitée, pourrait endommager l'appareil.

Autres niveaux de message

Important

Indique les informations importantes, nécessaires pour assurer le bon fonctionnement de l'appareil.

Remarque

Indique les informations utiles qui permettront d'obtenir le fonctionnement optimal de l'appareil.

Consignes de sécurité

AVIS

- Le produit Axis doit être utilisé conformément aux lois et règlements locaux.
- Ce produit est destiné à un usage professionnel.
- Installez ce produit à une distance sûre des enfants.
- Conserver ce produit Axis dans un environnement sec et ventilé.
- Ne pas exposer ce produit Axis aux chocs ou aux fortes pressions.
- Ne pas installer ce produit sur des poteaux, supports, surfaces ou murs instables.
- Utiliser uniquement des outils recommandés pour l'installation de l'appareil Axis. L'application d'une force excessive sur l'appareil avec des outils puissants pourrait l'endommager.
- Pour nettoyer le dispositif, utilisez un chiffon doux humide à l'eau tiède pure.
- N'utilisez pas de produits chimiques tels que le nettoyant pour vitres ou l'acétone pour nettoyer votre dispositif.
- Utiliser uniquement des accessoires conformes aux caractéristiques techniques de votre produit. Ils peuvent être fournis par Axis ou un tiers. Axis recommande d'utiliser un équipement d'alimentation Axis compatible avec votre produit.
- Utiliser uniquement les pièces de rechange fournies ou recommandées par Axis.
- Ne pas essayer de réparer vous-même ce produit. Contacter l'assistance technique d'Axis ou votre revendeur Axis pour des problèmes liés à l'entretien.

Transport

AVIS

- Lors du transport du produit Axis, utilisez l'emballage d'origine ou un équivalent pour éviter d'endommager le produit.

Batterie

Les piles boutons 3,0 V au lithium contiennent du 1,2-diméthoxyéthane, éthylène glycol diméthyl éther (EGDME), CAS n° 110-71-4.

Dôme ou vitre avant

AVIS

- Ne nettoyez pas un couvercle de dôme ou une vitre avant qui semble propre à l'œil nu et ne frottez jamais sa surface. Un nettoyage excessif peut l'endommager.
- Évitez de nettoyer le dôme ou la vitre avant en cas de lumière directe du soleil ou à des températures élevées, car cela peut entraîner des taches.

Deutsch

Sicherheitsinformationen

Gefährdungsstufen

⚠ GEFAHR

Weist auf eine gefährliche Situation hin, welche, wenn sie nicht vermieden wird, zum Tod oder zu schweren Verletzungen führen wird.

⚠ WARNUNG

Weist auf eine gefährliche Situation hin, welche, wenn sie nicht vermieden wird, zum Tod oder zu schweren Verletzungen führen könnte.

⚠ VORSICHT

Weist auf eine gefährliche Situation hin, welche, wenn sie nicht vermieden wird, zu leichteren oder mäßig schweren Verletzungen führen könnte.

HINWEIS

Weist auf eine Situation hin, welche, wenn sie nicht vermieden wird, zu Sachschäden führen könnte.

Andere Meldeebenen

Wichtig

Weist auf wichtige Informationen hin, die den richtigen Betrieb des Produkts gewährleisten.

Hinweis

Weist auf nützliche Informationen hin, die die optimale Verwendung des Produkts unterstützen.

Sicherheitsanweisungen

HINWEIS

- Das Axis Produkt muss unter Beachtung der geltenden Gesetze und Bestimmungen betrieben werden.
- Dieses Produkt ist für den professionellen Gebrauch bestimmt.
- Installieren Sie dieses Produkt in sicherer Entfernung von Kindern.
- Lagern Sie das Axis Produkt in einer trockenen und belüfteten Umgebung.
- Das Axis Produkt weder Stößen noch starkem Druck aussetzen.
- Installieren Sie das Produkt nicht an instabilen Masten, Halterungen, Oberflächen oder Wänden.
- Verwenden Sie bei der Installation des Axis Produkts ausschließlich passende Werkzeuge. Ein zu großer Kraftaufwand mit elektrischen Werkzeugen kann das Produkt beschädigen.
- Verwenden Sie zur Reinigung des Geräts ein weiches, mit lauwarmem reinen Wasser befeuchtetes Tuch.
- Verwenden Sie zur Reinigung Ihres Geräts keine chemischen Substanzen wie Fensterreiniger oder Aceton.
- Verwenden Sie nur Zubehör, das den technischen Vorgaben Ihres Produkts entspricht. Dieses ist von Axis oder Drittanbietern erhältlich. Axis empfiehlt die mit Ihrem Produkt kompatible Stromversorgung von Axis.
- Verwenden Sie ausschließlich Ersatzteile die von Axis angeboten oder empfohlen werden.
- Versuchen Sie nicht, dieses Produkt selbsttätig zu reparieren. Wenden Sie sich bezüglich Reparatur und Wartung an den Axis Support oder Ihren Axis Händler.

Transport

HINWEIS

- Bei Bedarf transportieren Sie das Axis Produkt in der Originalverpackung oder einer entsprechenden Verpackung, so dass Schäden vermieden werden.

Batterie

Lithium-Knopfzellen (3,0 V) enthalten 1,2-Dimethoxyethan; Ethylenglycoldimethylether (EGDME), CAS-Nr. 110-71-4.

Dome oder Frontscheibe

HINWEIS

- Säubern Sie die Dome-Abdeckung oder die Frontscheibe nicht, wenn diese sauber aussehen, und polieren Sie niemals die Oberfläche. Übermäßiges Reinigen kann die Oberfläche beschädigen.
- Vermeiden Sie die Reinigung von Dome oder Frontscheibe bei direktem Sonnenlicht oder bei erhöhten Temperaturen, da dies zu Flecken führen kann.

Italiano

Informazioni di sicurezza

Livelli di pericolo

⚠ PERICOLO

Indica una situazione pericolosa che, se non evitata, provoca morte o lesioni gravi.

⚠ AVVISO

Indica una situazione pericolosa che, se non evitata, potrebbe provocare la morte o lesioni gravi.

⚠ ATTENZIONE

Indica una situazione pericolosa che, se non evitata, potrebbe provocare lesioni medie o minori.

AVVISO

Indica una situazione che, se non evitata, potrebbe danneggiare la proprietà.

Altri livelli di messaggio

Importante

Indica informazioni importanti, essenziali per il corretto funzionamento del dispositivo.

Nota

Indica informazioni utili che aiutano a ottenere il massimo dal dispositivo.

Istruzioni per la sicurezza

AVVISO

- Il dispositivo Axis deve essere utilizzato in conformità alle leggi e alle normative locali.
- Questo prodotto è destinato all'uso professionale.
- Installare il prodotto a una distanza di sicurezza dai bambini.
- Conservare il dispositivo Axis in un ambiente asciutto e ventilato.
- Evitare di esporre il dispositivo Axis a urti o pressioni eccessive.
- Non installare il dispositivo su supporti, superfici, pareti o pali instabili.
- Utilizzare solo strumenti applicabili quando si installa il prodotto Axis. Se si utilizza una forza eccessiva con strumenti non adatti è possibile causare danni al dispositivo.
- Usare un panno morbido inumidito con acqua pura tiepida per pulire il dispositivo.
- Non utilizzare sostanze chimiche come detergenti per vetri o acetone per pulire il dispositivo.
- Utilizzare solo accessori compatibili con le specifiche tecniche del dispositivo. Questi possono essere forniti da Axis o da terze parti. Axis consiglia l'uso dell'apparecchiatura di

alimentazione Axis compatibile con il dispositivo.
- Utilizzare solo parti di ricambio fornite o consigliate da Axis.
- Non tentare di riparare il dispositivo da soli. Contattare l'assistenza o il rivenditore Axis per questioni relative alla manutenzione.

Trasporto

AVVISO

- Durante il trasporto del dispositivo Axis, utilizzare l'imballaggio originale o equivalente per evitare danni al dispositivo.

Batteria

Le batterie a bottone al litio da 3 V contengono 1,2-dimetossietano; etere dimetilico di glicole etilenico (EGDME), CAS n. 110-71-4.

Cupola o vetro frontale

AVVISO

- Non pulire la cupola o il vetro frontale quando allo sguardo sembra pulito e non lucidare mai la superficie. La pulizia eccessiva può danneggiare la superficie.
- Evitare la pulizia della cupola o del vetro frontale alla luce diretta del sole o a temperature elevate, poiché ciò può causare macchie.

Español

Información de seguridad

Niveles de peligro

⚠ PELIGRO

Indica una situación peligrosa que, si no se evita, provocará lesiones graves o la muerte.

⚠ ADVERTENCIA

Indica una situación peligrosa que, si no se evita, puede provocar lesiones graves o la muerte.

⚠ PRECAUCIÓN

Indica una situación peligrosa que, si no se evita, puede provocar lesiones moderadas o leves.

AVISO

Indica una situación peligrosa que, si no se evita, puede provocar daños materiales.

Otros niveles de mensaje

Importante

Indica información importante que es fundamental para que el producto funcione correctamente.

Nota

Indica información útil que ayuda a aprovechar el producto al máximo.

Instrucciones de seguridad

AVISO

- Este producto de Axis debe utilizarse de acuerdo con las leyes y normativas locales.
- Este producto es para uso profesional.
- Instale este producto a una distancia segura de los niños.
- Almacene el producto de Axis en un entorno seco y ventilado.
- Evite exponer el producto Axis a golpes o presiones excesivas.
- No instale el producto en postes, soportes, superficies o paredes inestables.
- Use solo las herramientas adecuadas al instalar el producto Axis. La aplicación de una fuerza excesiva con herramientas eléctricas puede provocar daños en el producto.
- Utilice un paño suave humedecido con agua pura y tibia para limpiar el dispositivo.
- No utilice productos químicos como un limpiacristales o acetona para limpiar el dispositivo.
- Utilice solo accesorios que cumplan con las especificaciones técnicas de su producto. Puede obtenerlos de Axis o de un tercero. Axis recomienda utilizar un equipo de suministro de

alimentación de Axis compatible con su producto.
- Utilice solo piezas de recambio suministradas o recomendadas por Axis.
- No intente reparar el producto usted mismo. Contacte son el servicio de asistencia de Axis o a su distribuidor de Axis para cualquier tema relacionado con el mantenimiento.

Transporte

AVISO

- Cuando transporte el producto de Axis, utilice el embalaje original o un equivalente para evitar daños en el producto.

Batería

Las pilas de botón de litio de 3,0 V contienen 1,2-dimetoxietano; éter dimetílico de etilenglicol (EGDME), n.º CAS 110-71-4.

Domo o cristal delantero

AVISO

- No limpie un domo ni el cristal delantero si parecen estar limpios a simple vista y no pula nunca la superficie. Una limpieza excesiva puede dañar la superficie.
- Evite limpiar el domo o el cristal delantero en contacto directo con la luz o a temperaturas elevadas, ya que puede provocar manchas.

日本語

安全情報

危険レベル

⚠ 危険

回避しない場合、死亡または重傷につながる危険な状態を示します。

⚠ 警告

回避しない場合、死亡または重傷につながるおそれのある危険な状態を示します。

⚠ 注意

回避しない場合、軽傷または中程度の怪我につながるおそれのある危険な状態を示します。

注意

回避しない場合、器物の破損につながるおそれのある状態を示します。

その他のメッセージレベル

重要

製品を正しく機能させるために不可欠な重要情報を示します。

注

製品を最大限に活用するために役立つ有用な情報を示します。

安全に関する指示

注意

- 本製品は、お使いになる地域の法律や規制に準拠して使用してください。
- 本製品は業務用です。
- 本製品はお子様の手の届かない場所に設置してください。
- 本製品は乾燥した換気のよい環境に保管してください。
- 本製品に衝撃または強い圧力を加えないでください。
- 本製品を不安定なポール、ブラケット、表面、または壁に設置しないでください。
- 本製品を設置する際には、適切な工具のみを使用してください。電動工具を使用して過剰な力をかけると、製品が損傷することがあります。
- 装置のクリーニングには、ぬるま湯で湿らせた柔らかい布を使用してください。
- 窓ガラス用洗剤やアセトンなどの化学薬品を使用して装置をクリーニングしないでください。
- 製品の技術仕様に準拠したアクセサリーのみを使用してください。これらのアクセサリーは、Axisまたはサードパーティから入手できます。Axisは、ご使用の製品と

互換性のあるAxis給電ネットワークスイッチの使用を推奨します。
- Axisが提供または推奨する交換部品のみを使用してください。
- 製品を自分で修理しないでください。修理については、Axisサポートまたは販売代理店にお問い合わせください。

輸送

注意

- 本製品を運搬する際は、製品が損傷しないよう、元の梱包か同等の梱包を使用してください。

バッテリー

リチウムコイン型3.0 V電池は、1,2-ジメトキシエタン (エチレングリコールジメチルエーテル (EGDME)、CAS番号110-71-4) を含有しています。

ドームやフロントガラス

注意

- 肉眼で見て汚れがない場合は、ドームやフロントガラスをクリーニングしないでください。また、絶対に表面を磨かないでください。 過度なクリーニングは表面を傷つける可能性があります。
- 直射日光の当たる場所や高温の場所でドームやフロントガラスをクリーニングすると、染みの原因となるため避けてください。

Português

Informações sobre segurança

Níveis de perigo

⚠ PERIGO

Indica uma situação perigosa que, se não evitada, irá resultar em morte ou lesões graves.

⚠ AVISO

Indica uma situação perigosa que, se não evitada, poderá resultar em morte ou lesões graves.

⚠ CUIDADO

Indica uma situação perigosa que, se não evitada, poderá resultar em lesões leves ou moderadas.

OBSERVAÇÃO

Indica uma situação perigosa que, se não evitada, poderá resultar em danos à propriedade.

Outros níveis de mensagens

Importante

Indica informações significativas que são essenciais para o produto funcionar corretamente.

Observação

Indica informações úteis que ajudam a obter o máximo do produto.

Instruções de segurança

OBSERVAÇÃO

- O produto Axis deve ser usado em conformidade com as leis e regulamentações locais.
- Este produto destina-se ao uso profissional.
- Instale este produto s uma distância segura de crianças.
- Armazene o produto Axis em um ambiente seco e ventilado.
- Evite expor o produto Axis a impactos ou pressão elevada.
- Não instale o produto em suportes, mastros, superfícies ou paredes instáveis.
- Use apenas as ferramentas recomendadas ao instalar o produto Axis. O uso de força excessiva com ferramentas elétricas poderia danificar o produto.
- Use um pano macio umedecido com água morna para limpar o dispositivo.
- Não use produtos químicos como limpa-vidros ou acetona para limpar o dispositivo.
- Utilize apenas as acessórios que atendam às especificações técnicas do produto. Esses poderão ser fornecidos pela Axis ou por terceiros. A Axis recomenda usar equipamento

de fonte de alimentação Axis compatível com seu produto.
- Utilize apenas peças sobressalentes fornecidas ou recomendadas pela Axis.
- Não tente reparar o produto por conta própria. Entre em contato com o suporte ou seu revendedor Axis para quaisquer questões relacionadas a serviços.

Transporte

OBSERVAÇÃO

- Ao transportar o produto Axis, use a embalagem original ou equivalente para evitar danos ao produto.

Bateria

As baterias tipo célula de íons de lítio de 3,0 V contêm 1,2-dimetoxietano; etileno glicol éter dimetílico (EGDME), nº CAS 110-71-4.

Dome ou vidro frontal

OBSERVAÇÃO

- Não limpe domes ou vidros frontais que pareçam visualmente limpos, e jamais faça o polimento da superfície. Limpar de forma excessiva pode danificar a superfície.
- Evite limpar a dome ou o vidro frontal sob luz solar direta ou em temperaturas elevadas, pois isso poderá causar manchas.

РУССКИЙ

Сведения по безопасности

Уровни опасности

⚠ ОПАСНО

Опасная ситуация, которая, если ее не устранить, приведет к смерти или опасным травмам.

⚠ ВНИМАНИЕ!

Опасная ситуация, которая, если ее не устранить, может привести к смерти или опасным травмам.

⚠ ОСТОРОЖНО

Опасная ситуация, которая, если ее не устранить, может привести к травмам незначительной или средней тяжести.

ПРИМЕЧАНИЕ.

Опасная ситуация, которая, если ее не устранить, может вызвать повреждение имущества.

Прочие уведомления

Внимание

Означает существенную информацию, которая важна для правильной работы изделия.

Примечание

Означает полезную информацию, которая помогает использовать все возможности изделия.

Инструкции в экстренных ситуациях

ПРИМЕЧАНИЕ.

- Это изделие Axis следует использовать в соответствии с местными законами и нормативами.
- Это изделие предназначено для профессионального использования.
- Устанавливайте изделие на безопасном расстоянии от детей.
- Камера Axis должна храниться в сухом, хорошо проветриваемом помещении.
- Не допускайте ударов или сильного давления на устройство Axis.
- Не монтируйте устройство на неустойчивых столбах, кронштейнах, поверхностях или стенах.
- При установке устройства Axis используйте только предназначенные для этого инструменты. Приложение чрезмерных

усилий к инструментам может привести к повреждению устройства.

- Для очистки устройства используйте мягкую ткань, смоченную в чистой умеренно теплой воде.
- Не используйте для очистки устройства средство для мытья окон, ацетон и другие подобные химические вещества.
- Используйте только принадлежности, которые соответствуют техническим характеристикам данного устройства. Они могут поставляться компанией Axis или сторонним производителем. Компания Axis рекомендует использовать блоки питания Axis, совместимые с устройством.
- Используйте только запасные части, поставляемые или рекомендованные компанией Axis.
- Не пытайтесь отремонтировать устройство самостоятельно. По вопросам обслуживания обращайтесь в службу поддержки Axis или к своему реселлеру Axis.

Транспортировка

ПРИМЕЧАНИЕ.

- При транспортировке устройства Axis используйте оригинальную упаковку или ее эквивалент во избежание повреждения изделия.

Батарея

Плоские литиевые батареи (3,0 В) содержат 1,2-диметоксиэтан — диметиловый эфир этиленгликоля (EGDME), CAS № 110-71-4.

Купол или переднее стекло

ПРИМЕЧАНИЕ.

- Не протирайте купол или переднее стекло, если на них не заметны загрязнения, и ни при каких обстоятельствах не полируйте их поверхность. Излишняя очистка может привести к повреждению поверхности.
- Не чистите купол или переднее стекло под прямыми солнечными лучами или при повышенной температуре, так как это может привести к образованию пятен.

한국어

안전 정보

위험 레벨

⚠ 위험

피하지 못한 경우 사망이나 심각한 부상이 발생하는 위험한 상황을 나타냅니다.

⚠ 경고

피하지 못한 경우 사망이나 심각한 부상이 발생할 수 있는 위험한 상황을 나타냅니다.

⚠ 주의

피하지 못한 경우 경미하거나 심하지 않은 부상이 발생할 수 있는 위험한 상황을 나타냅니다.

통지

피하지 못한 경우 재산상 손해가 발생할 수 있는 상황을 나타냅니다.

기타 메시지 레벨

중요 사항

제품이 올바르게 작동하는 데 필수적인 중요 정보를 나타냅니다.

비고

제품을 최대한으로 활용하는 데 도움이 되는 유용한 정보를 나타냅니다.

안전 지침

통지

- Axis 제품은 해당 지역 법률 및 규정을 준수하여 사용해야 합니다.
- 이 제품은 전문가용입니다.
- 이 제품은 어린이로부터 안전한 거리에 설치하십시오.
- Axis 제품은 건조하고 환기가 잘 되는 곳에 보관하십시오.
- Axis 제품에 충격이나 강한 압력을 가하지 마십시오.
- 불안정한 폴, 브래킷, 표면 또는 벽면에 제품을 설치하지 마십시오.
- Axis 제품을 설치할 때에는 적합한 도구만 사용하십시오. 전동 공구로 과도한 힘을 사용하면 제품에 손상을 줄 수 있습니다.
- 미지근한 물에 적신 부드러운 천으로 장치를 세척합니다.
- 창문 세정제나 아세톤과 같은 화학 물질을 사용하여 장치를 세척하지 마십시오.
- 제품의 기술적 사양을 준수하는 액세서리만 사용하십시오. 이러한 액세서리는 Axis 또는 제3자가 제공할 수 있습니다. Axis는 귀하의 제품과 호환되는 Axis 전원 장비 사용을 권합니다.
- Axis가 공급하거나 추천하는 예비 부품만 사용하십시오.
- 제품을 직접 수리하려고 하지 마십시오. 서비스 문제에 대해 Axis 지원 부서 또는 Axis 리셀러에 문의하십시오.

운반

통지

- Axis 제품을 운반할 때는 원래 포장이나 이에 준하는 포장을 사용해 제품이 손상되지 않도록 하십시오.

배터리

리튬 코인 셀 3.0V 배터리는 1,2-디메톡시에탄, EGDME(ethylene glycol dimethyl ether), CAS no. 110-71-4를 포함하고 있습니다.

돔 또는 전면 유리

통지

- 눈으로 보기에 깨끗한 돔이나 전면 유리는 닦지 말고, 표면에 광을 내지 마십시오. 과도한 청소는 표면에 손상을 줄 수 있습니다.
- 직사광선이나 높은 온도에서 돔이나 전면 유리를 닦으면 얼룩이 생길 수 있으므로 주의해서 피해야 합니다.

中文

安全信息

危险等级

⚠ 危险

表示如果不避免则会导致死亡或严重伤害的危险情况。

⚠ 警告

表示如果不避免则可能导致死亡或严重伤害的危险情况。

⚠ 警示

表示如果不避免则可能导致轻微或中度伤害的危险情况。

注意

表示如果不避免则可能导致财产损失的情况。

其他消息等级

重要

表示产品正常工作所必需的重要信息。

注意

表示有助于充分利用产品的有用信息。

安全说明

注意

- 使用安讯士产品时应遵守当地法律和法规。
- 本产品供专业人士使用。
- 安装本产品时，请与儿童保持安全距离。
- 在干燥通风的环境中存放安讯士产品。
- 避免将安讯士产品暴露在冲击或重压下。
- 请勿将本产品安装在不稳定的立杆、支架、表面或墙壁上。
- 安装安讯士产品时，仅使用适用的工具。使用电动工具过度施力可能导致产品损坏。
- 使用蘸有温水的软布清洁设备。
- 请勿使用窗户清洁剂或丙酮等化学品来清洁设备。
- 仅使用符合产品技术规格的附件。这些附件可由安讯士或第三方提供。安讯士推荐使用与产品兼容的安讯士电源设备。
- 仅使用安讯士提供或推荐的备件。
- 请勿尝试自行维修产品。有关服务事项，请联系安讯士支持部门或安讯士经销商。

运输

注意

- 安讯士产品运输途中，应使用其原包装或等效包装，以防对产品造成损坏。

电池

3.0 V 纽扣锂电池内含 1,2–二甲氧基乙烷；乙二醇二甲醚 (EGDME)，CAS 编号为 110–71–4。

球型罩或前玻璃

注意

- 请勿清洁看起来干净的球型罩或前玻璃，也不要对表面进行抛光。 过度清洁会损坏表面。
- 避免在阳光直射或高温下清洁球型罩或前玻璃，因为这可能会导致污渍。

繁體中文

安全資訊

危險等級

⚠ 危險

表示如果不避免，此危險情況會導致死亡或嚴重傷害。

⚠ 警告

表示如果不避免，此危險情況可能導致死亡或嚴重傷害。

⚠ 小心

表示如果不避免，此危險情況可能導致輕度或中度傷害。

注意

表示如果不避免，此情況可能導致財產損壞。

其他訊息等級

重要

表示是產品正常運作所不可缺少的重要資訊。

附註

表示是能充分發揮產品功能的實用資訊。

安全指示

注意

- Axis 產品的使用應符合當地法規。
- 本產品可用於專業用途。
- 將本產品安裝在遠離兒童之處，並保持適當距離以策安全。
- 請將安迅士產品存放在乾燥且通風良好的環境中。
- 避免讓 Axis 產品受到衝擊或重壓。
- 請勿將產品安裝在不穩定的圓柱、支架、表面或牆壁上。
- 安裝 Axis 產品時，僅可使用適合的工具。

使用電動工具時，過度施力可能會造成產品損壞。
- 使用沾有純淨溫水的軟布清潔設備。
- 請勿使用窗戶清潔劑或丙酮等化學物質來清潔設備。
- 所有配件必須符合產品的技術規格。可由 Axis 或第三方供應商提供。Axis 建議使用相容於產品的 Axis 電源設備。
- 只使用 Axis 提供或推薦的備用零件。
- 請勿嘗試自行修理產品。請向 Axis 技術支援人員或 Axis 經銷商洽詢維修事宜。

運輸

注意

- 當運送安迅士產品時，請使用原包裝或有相同保護效果的包裝，以防止產品損壞。

電池

鋰離子 3.0 V 鈕扣電池內含二甲基溶纖劑 (1,2-dimethoxyethane)；乙二醇 (ethylene glycol) 二甲醚 (dimethyl ether) (EGDME)，CAS 編號 110-71-4。

球形罩或前玻璃

注意

- 請勿清潔外表看起來乾淨的球形罩，且切勿拋光表面。 過度清潔會使表面損壞。
- 避免在陽光直射或高溫下清潔球形罩或前玻璃，因為這樣會造成污漬。

Bahasa Indonesia

Informasi keselamatan

Tingkat bahaya

⚠ BAHAYA

Menunjukkan situasi berbahaya yang jika tidak dihindari akan menyebabkan kematian atau cedera parah.

⚠ PERINGATAN

Menunjukkan situasi berbahaya yang jika tidak dihindari dapat mengakibatkan kematian atau cedera parah.

⚠ PERHATIAN

Menunjukkan situasi berbahaya yang jika tidak dihindari dapat menyebabkan cedera ringan atau sedang.

PEMBERITAHUAN

Menunjukkan situasi yang jika tidak dihindari dapat menyebabkan kerusakan properti.

Tingkat status pesan lainnya

Penting

Menunjukkan informasi utama yang sangat penting agar produk dapat berfungsi normal.

Catatan

Menunjukkan informasi berguna yang membantu mengoptimalkan fungsi produk.

Petunjuk keselamatan

PEMBERITAHUAN

- Produk Axis harus digunakan sesuai dengan hukum dan peraturan setempat.
- Produk ini khusus digunakan oleh para profesional.
- Pasang produk ini di lokasi yang aman dari jangkauan anak-anak.
- Simpan produk Axis di lingkungan yang kering dan berventilasi.
- Pastikan produk Axis tidak terkena guncangan atau tekanan berat.
- Jangan memasang produk pada tiang, braket, permukaan, atau dinding yang tidak stabil.
- Hanya gunakan alat yang sesuai ketika memasang produk Axis. Penggunaan perkakas listrik (power tool) dengan gaya berlebih dapat menyebabkan kerusakan pada produk.
- Gunakan kain lembut yang dibasahi dengan air hangat untuk membersihkan perangkat.
- Jangan gunakan bahan kimia seperti pembersih jendela, atau aseton untuk membersihkan perangkat Anda.
- Hanya gunakan aksesori yang sesuai dengan spesifikasi teknis produk Anda. Aksesori dapat disediakan oleh Axis atau pihak ketiga. Axis

menyarankan penggunaan peralatan sumber daya Axis yang kompatibel dengan produk Anda.
- Hanya gunakan suku cadang yang disediakan atau disarankan oleh Axis.
- Jangan mencoba untuk memperbaiki produk sendiri. Hubungi staf dukungan Axis atau Axis reseller untuk hal-hal terkait servis.

Pengangkutan

PEMBERITAHUAN

- Ketika mengangkut produk Axis, gunakan kemasan asli atau setara untuk mencegah kerusakan pada produk.

Baterai

Baterai litium coin cell 3,0 V mengandung 1,2-dimetoksietana; etilen glikol dimetil ether (EGDME), CAS no. 110-71-4.

Dome atau kaca depan

PEMBERITAHUAN

- Jangan membersihkan dome atau kaca depan yang terlihat bersih dan dilarang keras memoles permukaannya. Pembersihan yang berlebihan dapat merusak permukaan dome.
- Dilarang membersihkan dome atau kaca depan di bawah sinar matahari langsung atau pada suhu tinggi karena tindakan ini dapat menimbulkan noda.

Türk

Güvenlik bilgileri

Tehlike seviyeleri

⚠ TEHLİKE

Önlenmediği takdirde ölüme veya ciddi yaralanmaya yol açacak tehlikeli bir durumu belirtir.

⚠ UYARI

Önlenmediği takdirde ölüme veya ciddi yaralanmaya yol açabilecek tehlikeli bir durumu belirtir.

⚠ DİKKAT

Önlenmediği takdirde küçük veya orta derecede yaralanmaya yol açabilecek tehlikeli bir durumu belirtir.

İKAZ

Önlenmediği takdirde mülk hasarına yol açabilecek bir durumu belirtir.

Diğer mesaj seviyeleri

Önemli

Ürünün doğru şekilde çalışması için gerekli olan önemli bilgileri belirtir.

Not

Üründen en iyi şekilde yararlanmanıza yardımcı olacak faydalı bilgileri belirtir.

Güvenlik talimatları

İKAZ

- Axis ürünü, yerel yasa ve yönetmeliklere uygun şekilde kullanılmalıdır.
- Bu ürün profesyonel kullanım için tasarlanmıştır.
- Bu ürünün kurulumunu çocuklardan güvenli bir mesafede gerçekleştirin.
- Axis ürününü kuru ve havalandırılmış bir ortamda saklayın.
- Axis ürününü darbelere veya aşırı basınca maruz bırakmayın.
- Ürünü dengesiz direklere, braketlere, yüzeylere veya duvarlara monte etmeyin.
- Axis ürününü yalnızca uygun aletleri kullanarak monte edin. Elektrikli aletler ile aşırı güç uygulamak ürüne zarar verebilir.
- Cihazı temizlemek için saf ılık su ile nemlendirilmiş yumuşak bir bez kullanın.
- Cihazınızı temizlerken cam temizleyici veya aseton gibi kimyasal maddeler kullanmayın.
- Yalnızca ürününüzün teknik özelliklerine uygun aksesuarları kullanın. Bunlar Axis veya üçüncü bir tarafça sağlanabilir. Axis, ürününüz ile

uyumlu Axis güç kaynağı ekipmanlarının kullanılmasını önerir.
- Yalnızca Axis tarafından sağlanan veya önerilen yedek parçaları kullanın.
- Ürünü kendiniz tamir etmeye çalışmayın. Servis ile ilgili konular için Axis destek birimine veya Axis bayinize başvurun.

Taşımacılık

İKAZ

- Axis ürününün taşınması sırasında ürünün hasar görmesini önlemek için orijinal ambalajını veya muadilini kullanın.

Pil

Lityum düğme hücreli 3.0 V piller 1,2-dimetoksietan; etilen glikol dimetil eter (EGDME) içerir, CAS no. 110-71-4.

Kubbe veya ön cam

İKAZ

- Görsel açıdan temiz görünen bir kubbeyi veya ön camı temizlemeyin ve yüzeyini asla parlatmayın. Aşırı temizlik, yüzeye zarar verebilir.
- Lekelere neden olabileceğinden, kubbeyi veya ön camı doğrudan güneş ışığına veya yüksek sıcaklıklara maruz bırakarak temizlemekten kaçının.

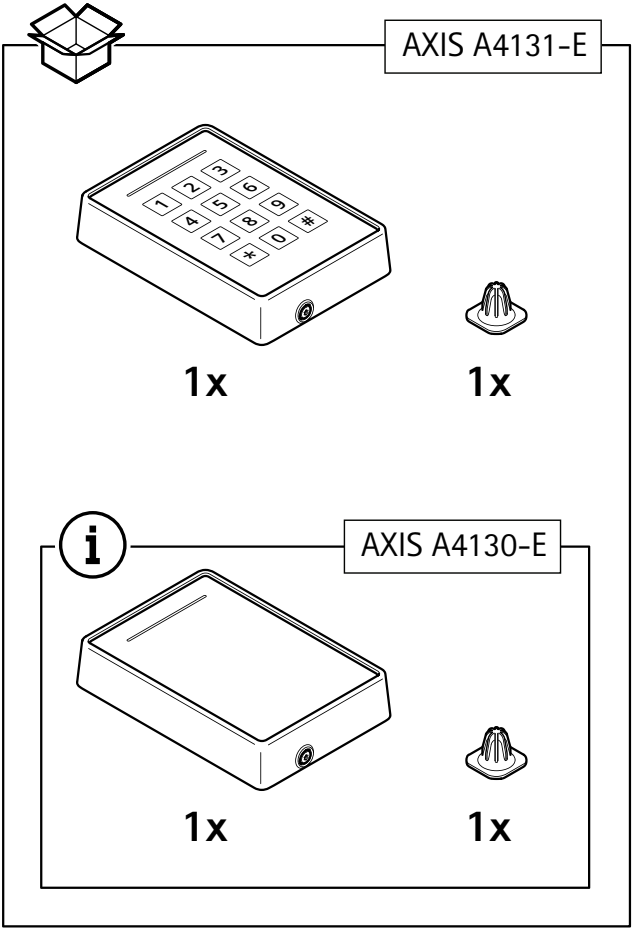
AXIS A4131-E
1x
1x
AXIS A4130-E
1x
1x

AXIS A4131-E

AXIS TA4401 Braille Label

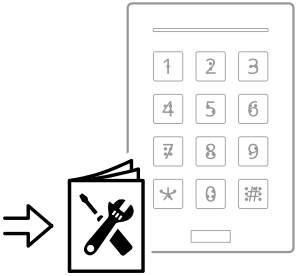

Installation Guide

1.1

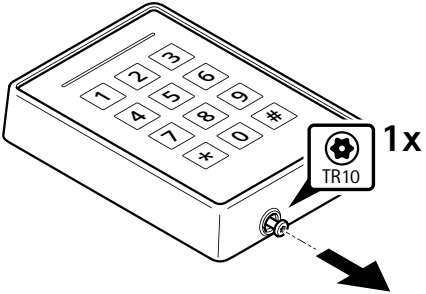

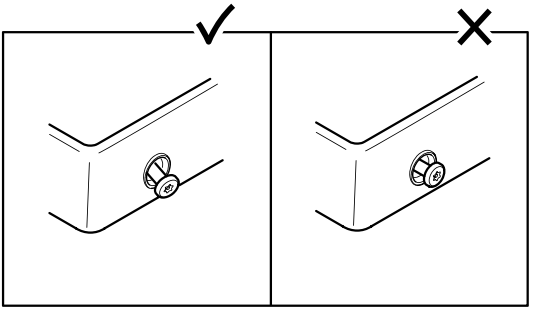

1.2

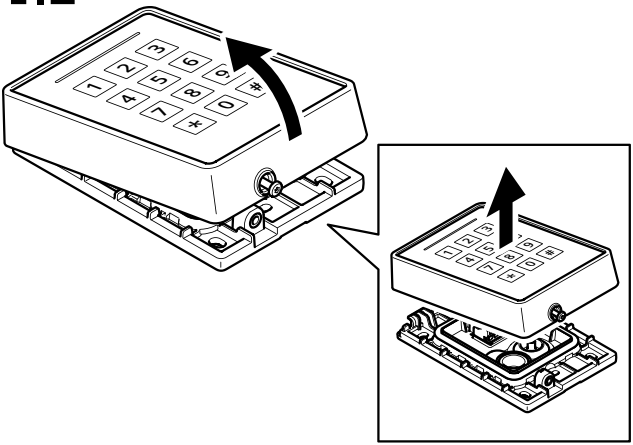

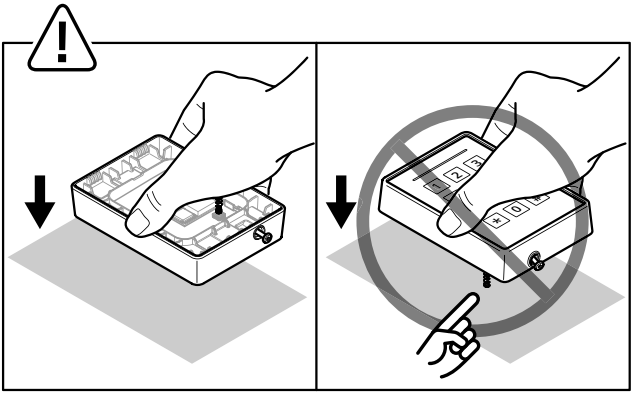

1.3

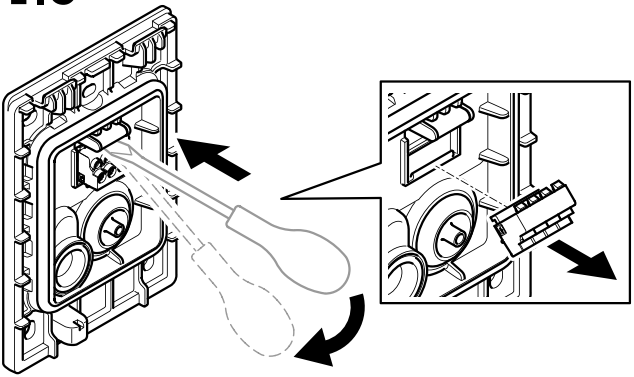

1.4

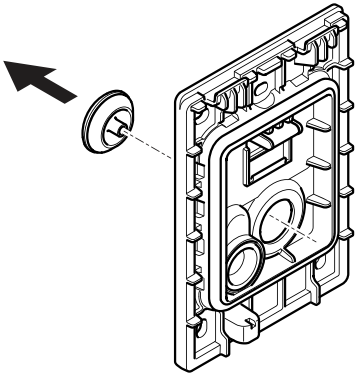

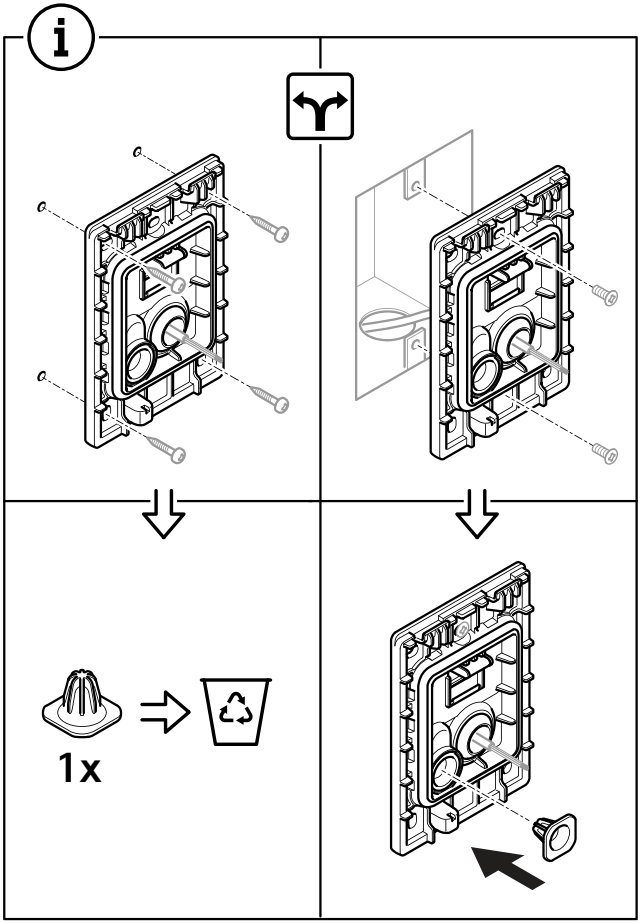
1x

1.5

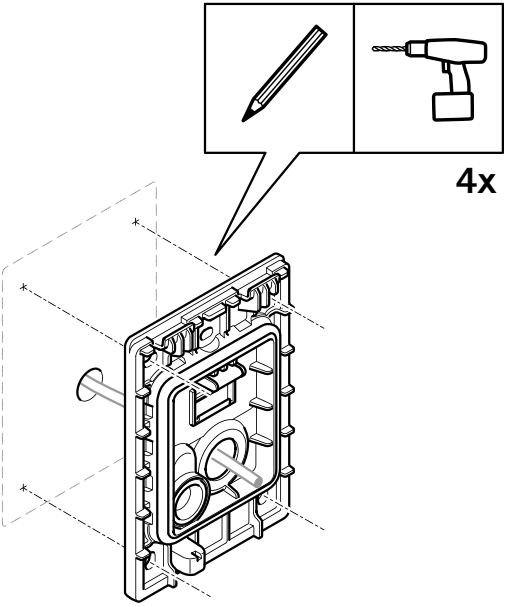

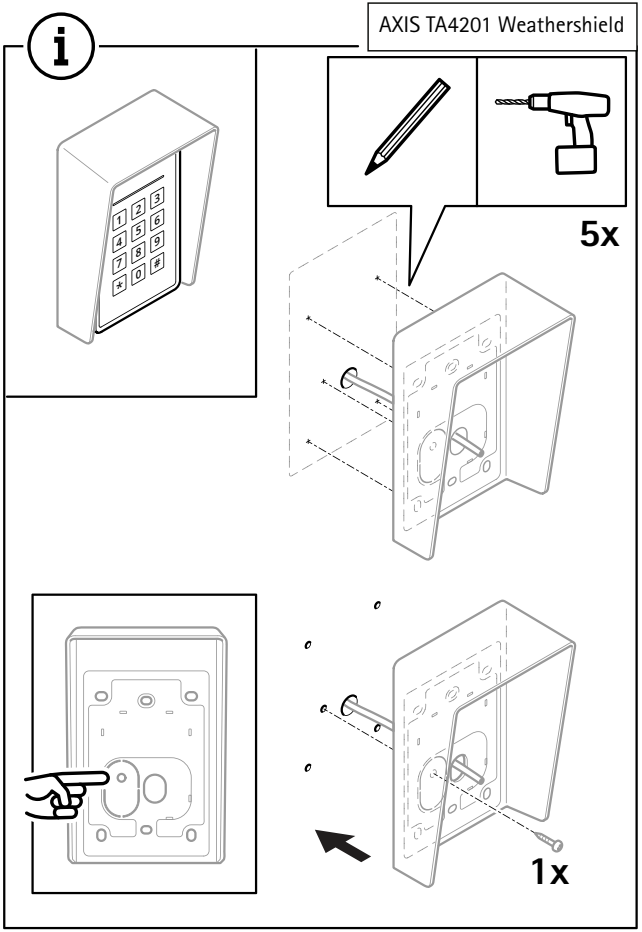
5x
1x

1.6

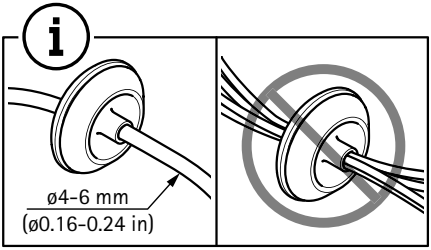

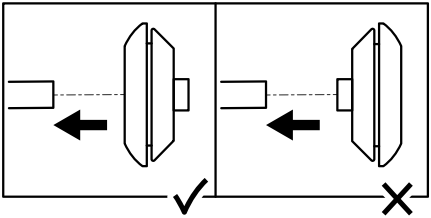

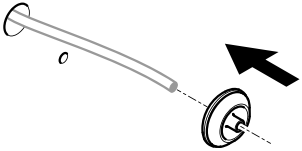

1.7

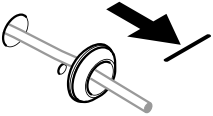

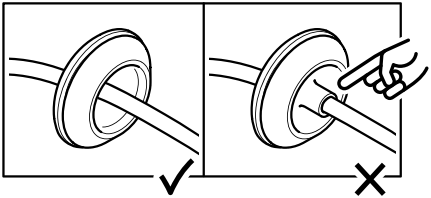

1.8

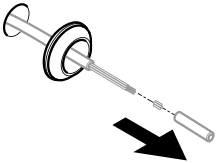

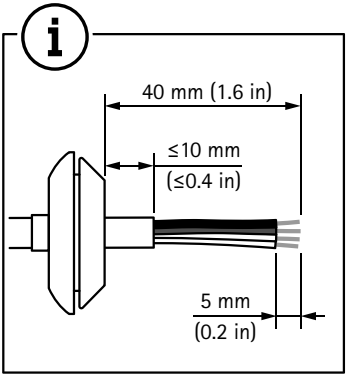

1.9

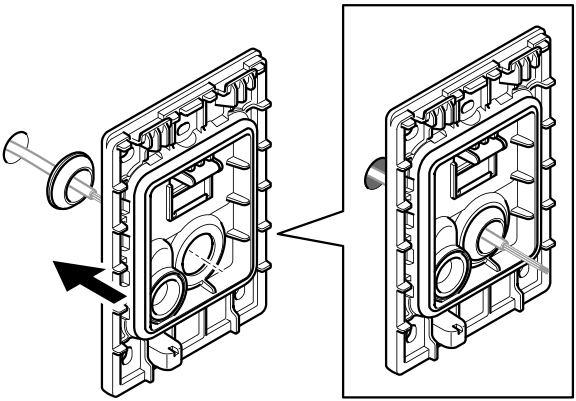

1.10

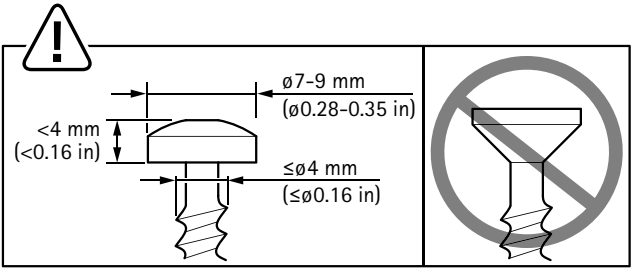

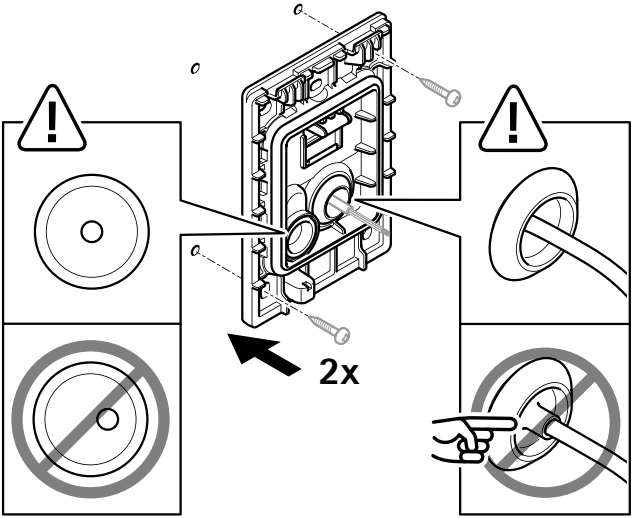

1.11

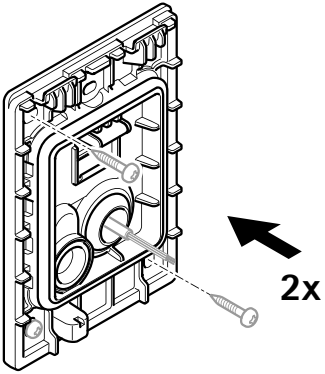

1.12

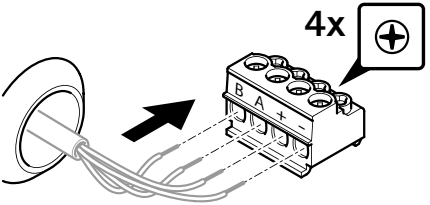

1.13

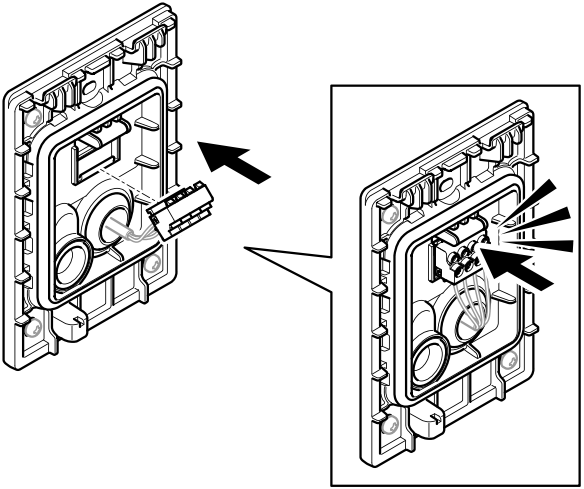

1.14

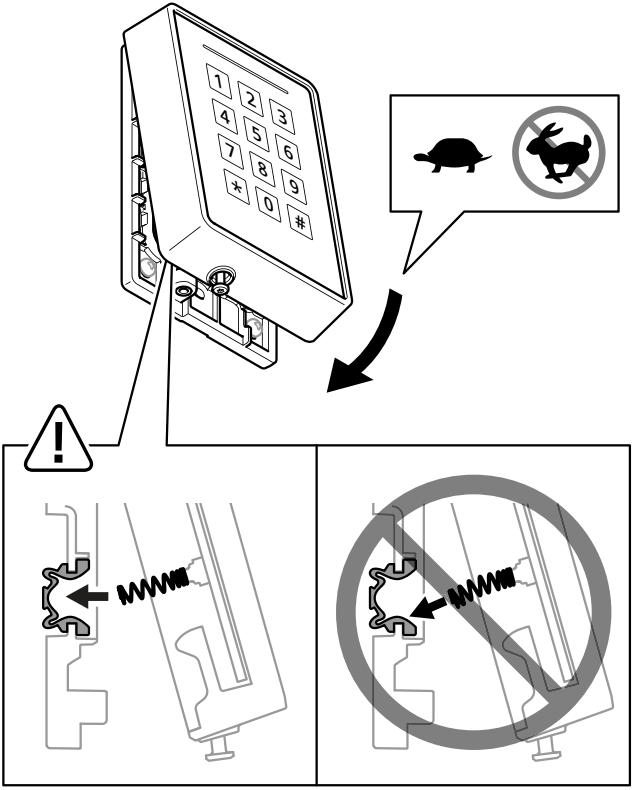

1.15

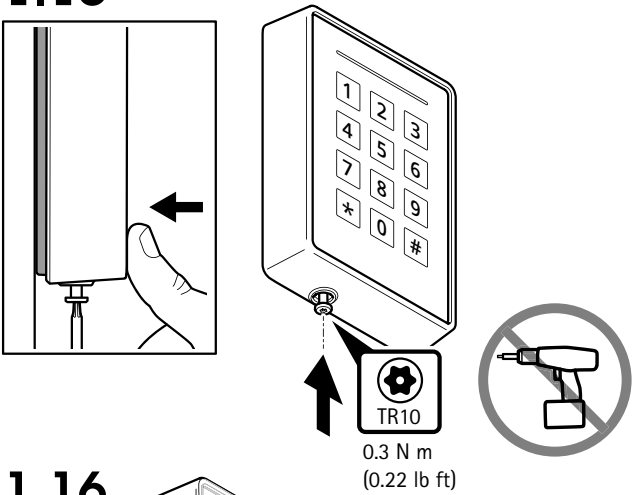

1.16

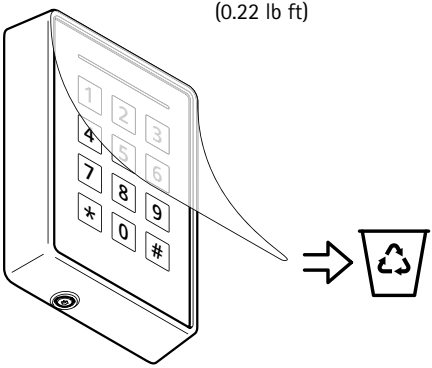

1.17

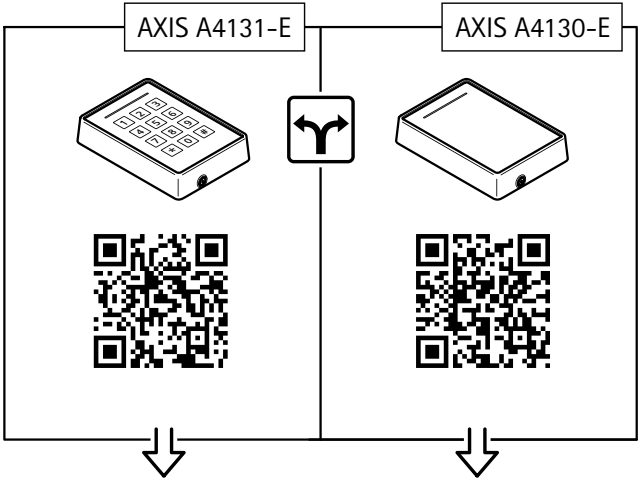

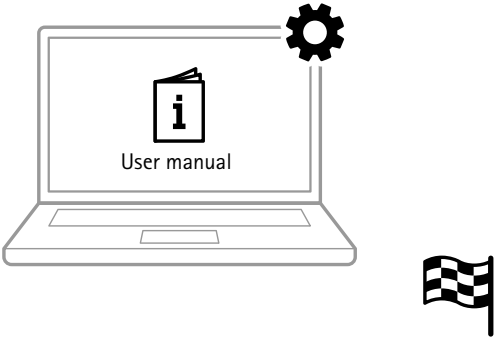

3406767

2025-12 (M2.2)

© 2025 Axis Communications AB