Celletra

Cellular Transmission Solutions

P.O. Box 106, Tavor building 1,
Yoqne'am Ilit 20692, ISRAEL
Tel. + 972 4 9592522
Fax. + 972 4 9592523
E-mail: celletra@celletra.com

BEAMER®

Pol BEAMER® PCS (3.2) Array System including Interface and Control Unit (ICU)

Assembly & Operation Manual

No.913000801

	Name	Date	Signature
Written By	N. David		
Checked	G. Argaman		
Approved	M. Shalom		

Celletra
Cellular Transmission Solutions

P.O. Box 106, Tavor building 1,
Yoqne'am Ilit 20692, ISRAEL
Tel. + 972 4 9592522
Fax. + 972 4 9592523
E-mail: celletra@celletra.com

FCC Part 15A Compliance Statement

This device complies with part 15 of the FCC rule. Operation is subject to the following two conditions: (1) this device may not cause harmful interference , and (2) this device must accept any interference received, including interference that may cause undesired operation

Caution

Changes or Modifications not expressly approved by Celletra Ltd. could void the user's authority to operate the equipment"

NOTE

This equipment has been tested and found to comply with the limits for a Class A digital device, pursuant to part 15 of the FCC rules. These limits are designed to provide reasonable protection against harmful interference when the equipment is operated in a commercial environment. This equipment generates, uses, and can radiate Radio Frequency energy and, if not installed and used in accordance with the instructions manual, may cause harmful interference to radio communication. Operation of this equipment in a residential area is likely to cause harmful interference in which case the user will be required to correct the interference at his own expense.

Celletra
Cellular Transmission Solutions

P.O. Box 106, Tavor building 1,
Yoqne'am Ilit 20692, ISRAEL
Tel. + 972 4 9592522
Fax. + 972 4 9592523
E-mail: celletra@celletra.com

PROPRIETARY NOTICE

ALL DATA AND INFORMATION CONTAINED IN OR DISCLOSED BY THIS DOCUMENT IS CONFIDENTIAL AND PROPRIETARY INFORMATION OF CELLETRA LTD AND ALL RIGHTS THEREIN ARE EXPRESSLY RESERVED. BY ACCEPTING THIS MATERIAL, THE RECIPIENT AGREES THAT THIS MATERIAL AND THE INFORMATION CONTAINED THEREIN IS HELD IN CONFIDENCE AND IN TRUST AND WILL NOT BE USED, COPIED, REPRODUCED IN WHOLE OR IN PART. NOR ITS CONTENTS REVEALED IN ANY MANNER TO OTHERS, WITHOUT THE EXPLICIT WRITTEN PERMISSION OF CELLETRA LTD.

Revision	Description	Date
0	Release	May, 2001
1	Change Output Power to +40 dbm	August 2001

Changes are periodically made to the information contained in this manual. These changes are published in the "software/hardware release notes", and will be incorporated into new editions. All rights are reserved. No parts of this manual may be reproduced in any form, without permission in writing from Celletra Ltd.

Copyright© 1999, 2000 Celletra Ltd.

BEAMER® is a trademark of Celletra Ltd.

Celletra Ltd. reserves the right to change specifications without notice.

CONTENTS

FIGURES

TABLES

1. INTRODUCTION 10

1.1. Acronyms and Abbreviations 10

1.2. BEAMER® Array System Overview 11
1.2.1. BEAMER® Family Modular Concept 13

1.3. Overview of the Interface and Control Unit (ICU) 13
1.3.1. Interface and Control Unit - ICU 13
1.3.2. ICU Controller Description 14
1.3.3. RF Path Description 16
1.3.4. Bias-T Types 16

1.4. Communication with BEAMER® and PC 17
1.4.1. Network Architecture and Capacity 17

1.5. Communication Procedure 17
1.5.1. BEAMER® Monitoring and Control 17

1.6. DC Distribution 18

1.7. Maintainability Requirements 19

2. INSTALLATION GUIDE 20

2.1. Applicable Documents 20

2.2. Scope 20

2.3. Important Safety Precautions 21
2.3.1. Handling and Moving the BEAMER® Array 21
2.3.2. System Measurement and Testing Conditions 22

2.4. ICU Operation Instructions 23
2.4.1. DC Connections and Fuse Replacement 23
2.4.2. Connecting the Unit to a Host PC or BTS Controller 24
2.4.3. Replacing the Back-Up Battery 25
2.4.4. Bias-Ts 27

2.5. Array Installation 28

2.6. Assembly Instructions for the PCS 1x4x4 Array 28
2.6.1. Mounting Assembly (Figure 12): 28
2.6.2. BEAMER® Array Mounting (Figures 13 and 14): 29
2.6.3. BEAMER® Array Dismounting (Figures 13 and 14): 29
2.6.4. BEAMER® Dismounting (Figure 15): 29
2.6.5. BEAMER® Mounting (Figure 15 and 16) 29

2.7. PCS 1x8x8 Array Assembly Instructions 34

2.8. BEAMER® System Setup 37
2.8.1. System Block Diagram 37
2.8.2. Logical Addresses and System Components 39
2.8.3. System Configuration and Setting 40
2.8.4. Setting the Bias-T Attenuation 43
2.8.5. Calibrating the Transmit Channel Gain 47
2.8.6. Calibrating the Receive Channel Gain 50

2.9. BEAMER® System Sector Array Installation Record 52
2.9.1. Installed BEAMER® Modules 52
2.9.2. RF Cable Loss 52
2.9.3. Tx Channel 52
2.9.4. Rx Channels 52

2.10. Test Procedure for Measuring the Rx Gain Balance 53

2.11. Smart-Terminal Program Description 54
2.11.1. Program Installation 54
2.11.2. Running the Program 54
2.11.3. Entering and Editing a Command 55

3. BSM (BEAMER® SYSTEM MANAGER) PROGRAM 59

3.1. Functions 59

3.2. Requirements for Operation 59
3.2.1. Hardware 59
3.2.2. Software 59

3.3. User Interface Description 60
3.3.1. Main Menu - Active Radiating Module System Manager 60
3.3.2. System Menu List 60

3.4. Status Reports 61
3.4.1. Report by Visual Monitoring LEDs 61

3.4.2. Report by Sending Messages (Monitoring) 61
3.4.3. BEAMER® Array System Control 61

3.5. BSM S/W 62
3.5.1. S/W Installation 62
3.5.2. S/W Operation 62

3.6. BSM Main Screen 62

3.7. Comm Port Selection 63

3.8. Password Entering 63

3.9. Host Selection 63

3.10. Installation of ICU in System 64

3.11. Failure Conditions Selection 64

3.12. BEAMER® Limits Definition 65

3.13. Shut Down Conditions Enable/Disable 65

3.14. ICU Limits Definition 66

3.15. System Definition 66

3.16. Sub-Array and BEAMER® Setting 67

3.17. Sub Array Setting 68

3.18. BEAMER® Installation 69

3.19. Column and Row Definition 70

3.20. Sub-Array Status and Attenuator Setting 71

3.21. Control & BEAMER® Setting 71

3.22. BEAMER® Control 72

3.23. ICU Status 73

3.24. ICU CTRLR Status 73

3.25. ICU Properties 74

4. SOFTWARE DOWNLOAD GUIDE 75

4.1. Introduction 75

4.2. Overview 75
4.2.1. Downloading Software to the ICU 75
4.2.2. Downloading Software to the BEAMER® 77

4.3. User Interface for SW Download 78

4.3.1. Functions 78
4.3.2. Requirements for Operation 78
4.3.3. User Interface Installation 78
4.3.4. User Interface Operation 78

4.4. User Interface Description 79
4.4.1. System Field 79
4.4.2. Authorization Field 79
4.4.3. System Date and Time Field 79
4.4.4. ICU SW Properties Field 79
4.4.5. Destination Field 79
4.4.6. Setting Menu 80
4.4.7. Password Menu 81

4.5. Program Loading Procedure 82
4.5.1. Procedure for Loading Program to the ICU 82

4.6. Procedure for Loading Program to the BEAMER® 84

WARRANTY

INDEX

FIGURES

Figure 1: BEAMER® (PCS band) with beam shaping wings 12
Figure 2: BEAMER® block diagram 12
Figure 3: BEAMER® family modular concept 13
Figure 4: ICU block diagram 15
Figure 5: Active Bias-T block diagrams 16
Figure 6: Communication procedure 18
Figure 7: BEAMER® 4X4X1 Pol. BEAMER® array - front view 22
Figure 8: DC wiring 23
Figure 9: Fuse and backup battery location 1
Figure 10: Serial communication ports and on-board jumper locations 25
Figure 11: Bias-T inputs / outputs and numbering 27
Figure 12: Mounting Assembly. 30
Figure 13: BEAMER® Array Mounting/Dismounting(Lower fork) 31
Figure 14: BEAMER® Array Mounting/Dismounting (Upper fork) 32
Figure 15: BEAMER® dismounting 33
Figure 16: Mounting Assy. 35
Figure 17: Bottom Array 36
Figure 18: Top Array 37
Figure 19: BEAMER® single pol. – sector connections block diagram 38
Figure 20: BEAMER® system entities and their logical relationships 1
Figure 21: Tx link budget example 48
Figure 22: Rx chanel gain distribution example 50
Figure 23:Measuring the received 53
Figure 24: Smart Terminal 2 window 55
Figure 25: Entering and editing a command 56
Figure 26: Using scripts 57

TABLES

Table 1: RS485 and RS232 communication connectors 24
Table 2: BEAMER® system logical addresses range 40
Table 3: ICU - BEAMER® default values and quick reference 41
Table 4: BEAMER® limits recommended settings 45
Table 5: ICU limits setting 46
Table 6: Failure conditions 46

1. INTRODUCTION

This document is a guide to the Installation, operation and maintenance of the integrated Interface and Control Unit (ICU) and the BEAMER® ™ Active Radiating Module System.

1.1. Acronyms and Abbreviations

ACPR	Adjacent Channel Power Ratio
BEAMER® ™	Active Radiating Module
ATP	Acceptance Tests Procedure
BFN	Beam Forming Network
BPF	Band Pass Filter
BTS	Base Transceiver Station
BW	Band Width
CDMA	Code Division Multiple Access
DCA	Digitally Controlled Attenuator
EMI	Electro Magnetic Interference
FSK	Frequency Shift Keying
ICU	Interface & Control Unit
IM	Inter Modulation
LED	Light Emitting Diode
LSB	Least Significant Bit
M&C	Monitoring and Control

MSB	Most Significant Bit
MTBF	Mean Time Between Failures
MTTR	Mean Time To Repair
PCB	Printed Circuit Board
PCS	Personal Communications Services
RF	Radio Frequency
RFI	Radio Frequency Interference
Rx	Receiver
TBD	To Be Defined
TDMA	Time Division Multiple Access
Tx	Transmitter
VSWR	Voltage Standing Wave Ratio

1.2. BEAMER® Array System Overview

The BEAMER® is an integrated active antenna for wireless communications. It incorporates a transmission amplifier, transmission band filter, transmission elemental antenna, and the respective receive chain: elemental antenna, band filter, and LNA.

The Tx amplifier is linearized. The Rx amplifier has an exceptional linear dynamic range. The integral unit contains its own power conditioner and a monitoring and control circuit that communicates with the BTS. The whole unit is sealed and built as a plug-in replaceable unit. The design and production techniques offer low price and high reliability.

The BEAMER® replaces the PA in the BTS. It circumvents the loss in the transmit chain - duplexer, cable, antenna corporate feed or beam forming network – which typically amounts to 4 to 8 dB. A column of 4 to 8 BEAMER® units replaces the sector antenna. The reliability and the redundancy in the array offer a major gain in life-cycle cost.

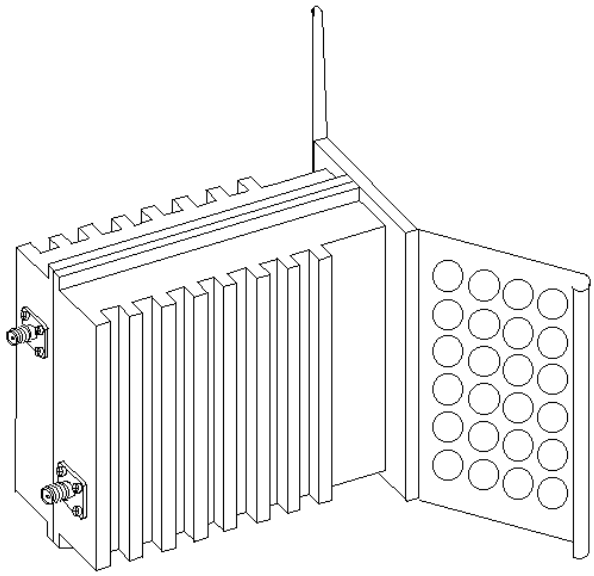

Figure 1: BEAMER® (PCS band) with beam shaping wings

Dimensions: 70x140x160 mm

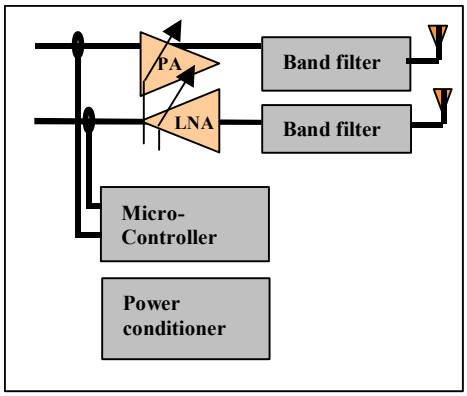

Figure 2: BEAMER® block diagram

The antenna elements of the Tx and Rx channels are vertically and/or ± 45° slant polarized. The separation between the receive and transmit antenna elements, and the resulting 20 dB of isolation, enables the use of two separate band pass filters in front of the antenna elements instead of having to use a much more complex duplexer structure.

The band pass filters (BPF) supply enough Tx/Rx channel isolation to ensure that the small amount of Tx signal power and Tx wide band noise power leaking into the sensitive receive channel will not degrade the Rx channel performance.

The Rx amplifier is a low noise amplifier with a high enough intercept point that several cellular channels received simultaneously should not degrade each other's performance. The low noise and high gain performance of this amplifier compensate for the high losses of the coaxial cable going down from the Rx BEAMER® front-end to the base station. The Tx Amplifier is a power amplifier that enables up to 2 Watts average at the Tx antenna element of the BEAMER® while compensating for gain and power losses in the coaxial cable coming up from the base station.

1.2.1. BEAMER® Family Modular Concept

The BEAMER® family of products is modular. Each member can be attached to other modules to establish a new product, matched to specific customer requirements. This concept is illustrated in the following figure.

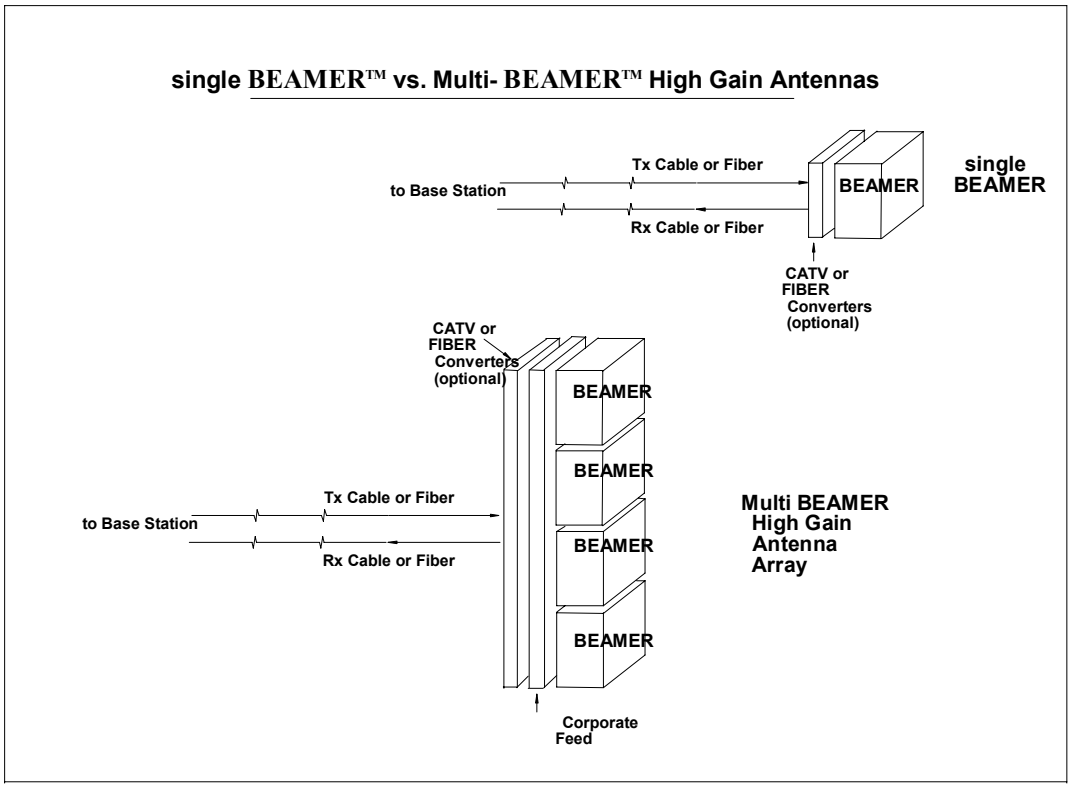

Figure 3: BEAMER® family modular concept

The BEAMER® can be used as a standalone antenna element for distributed antenna purposes or stacked to form an antenna array. The BEAMER® and the BEAMER® Array can be either connected with a pair of coaxial cables to a modified base station or converted to match existing CATV infrastructure or fiber optic infrastructure.

1.3. Overview of the Interface and Control Unit (ICU)

The BEAMER® system consists of two parts:

- BEAMER® Active Radiating Module Array System
- ICU (Interface and Control Unit) - the interface between the BTS (Base Transceiver Station) and the BEAMER® .

1.3.1. Interface and Control Unit - ICU

The ICU interfaces between the BEAMER® system and the BTS, provides the BEAMER® system with the DC power, and controls each individual BEAMER® within any array. It consists of a set of Bias T connections for multiplexing the DC power and the monitoring and

control communication on the RF cables to the BEAMER® system, a modem for communicating with each of the BEAMER® units, and a digital processor/controller.

The ICU interfaces to the Tx and Rx RF connections in the BTS, to the Alarm concentrating unit in the BTS, and has serial ports for a local host computer, for remote control, and for diagnostics. A set of indicator lights visually reports the status of each BEAMER® Array. The ICU can be remote controlled through an internal modem connected to a phone line and a remote host computer. The Active Bias-Ts in the ICU enable setting the proper input power for the BEAMER® and maintaining beam shaping using the DCA inside the Active Bias-Ts. Up to 12 ACBTs , in any mixture of Rx and Tx types can be assembled in each ICU

1.3.2. ICU Controller Description

The controller controls the proper operation of the BEAMER® circuits and enables real-time bi-directional communication between individual BEAMER® units and the Base Station central computer or dedicated computer, via the ICU. Up to 16 BEAMER® modules can be monitored and controlled by each ICU unit.

Bi-directional communication with the BEAMER® is established through an FSK modulated communication channel multiplexed on the Rx coaxial cable connecting the individual BEAMER® , to the ICU within the base station. The coaxial cable can be as long as 100 meters and have losses of up to 10db at 1850-1990MHz band.

The Rx signal at 1850-1910 MHz runs on the same cable with DC and the M&C, but an isolation between the DC, M&C, and Rx signals is high due to Bias-T isolation.

The Tx signal at 1930-1990 MHz runs on the same cable together with the DC voltage, but isolation between the DC voltage and Tx signals is high due to Bias-T isolation.

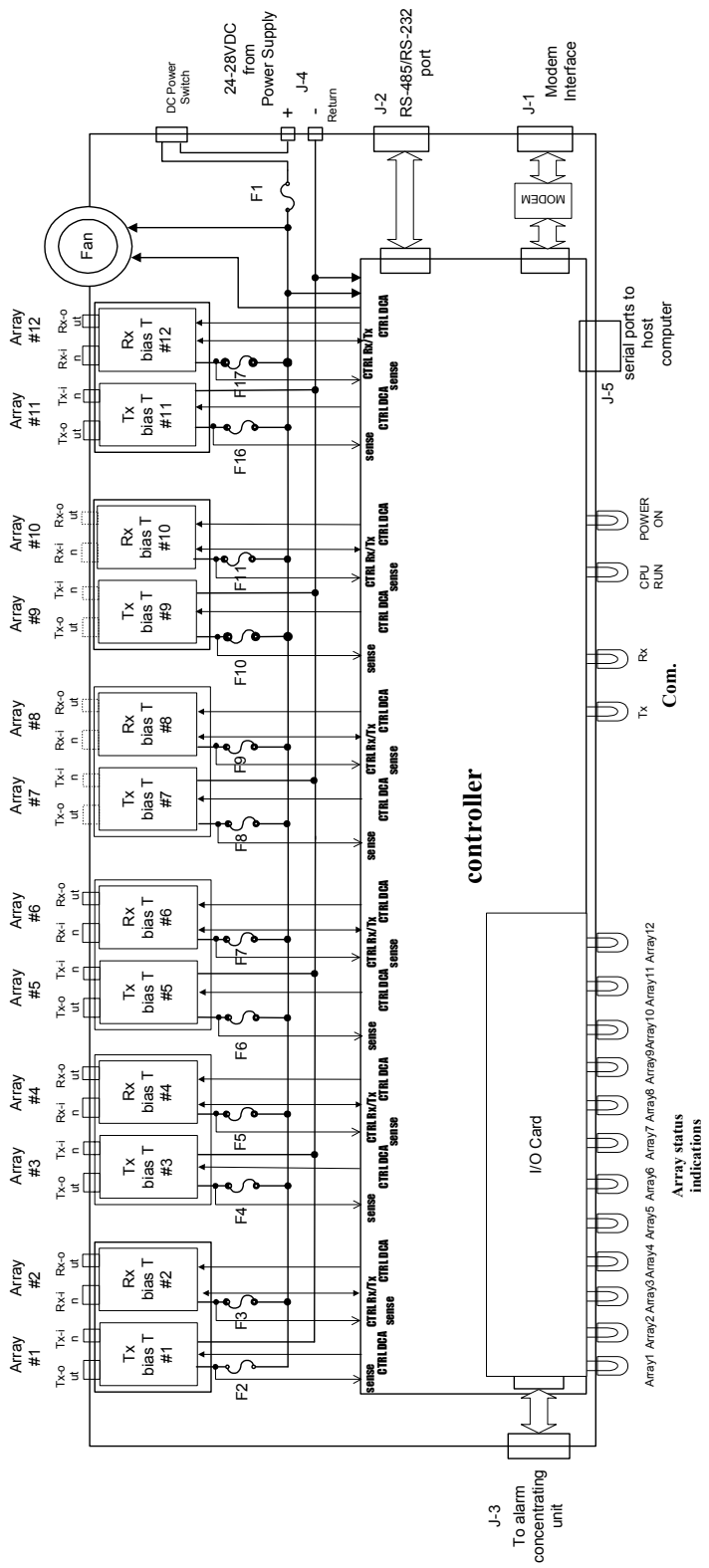

Figure 4: ICU block diagram

1.3.3. RF Path Description

1.3.3.1. Tx/Rx Active Bias-T Block Diagram

The Active Bias-T contents a boost amplifier and a digital controlled attenuator in order to adjust the gain and enable a convenient interface to the BTS. The gain of the ABT assemblies is Temperature Compensated. Block diagrams for this ABT are shown the following figure.

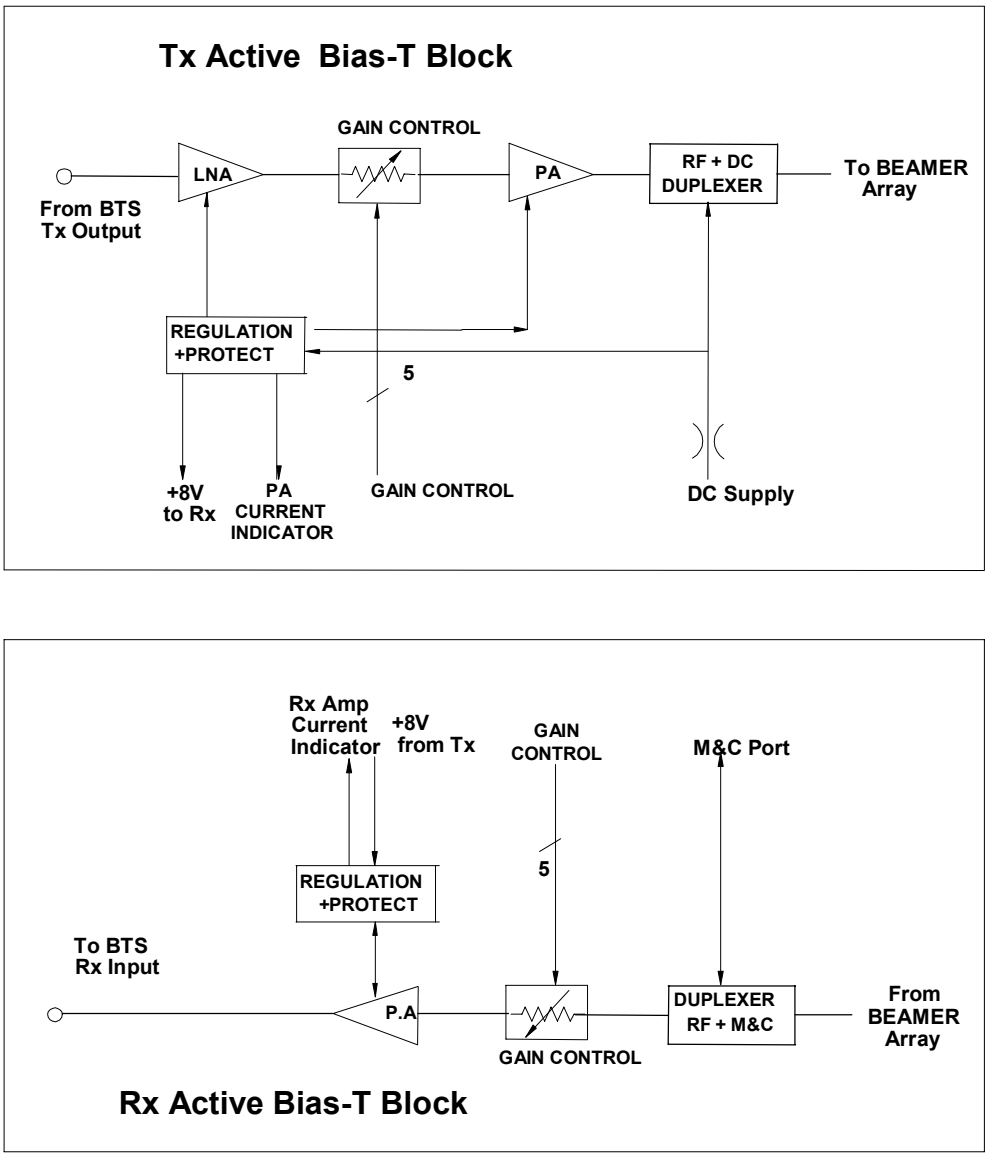

Figure 5: Active Bias-T block diagrams

1.3.4. Bias-T Types

The ICU is equipped with Rx ABTs and Tx ABTs. The Rx ABT can be one of several types, which differ in the available gain from –4 db to +28db

1.4. Communication with BEAMER® and PC

1.4.1. Network Architecture and Capacity

The ICU is the master in a star configured network .The network shall enable data transmission along the following data transmission paths:

1. ICU to each BEAMER® unit of any of 3 Pol BEAMER® Arrays
2. ICU to PC
3. BEAMER® to ICU

The maximum capacity of the network is 16 BEAMER® modules in any combinations of arrays.

1.5. Communication Procedure

The communication mode between the ICU, the BEAMER® , and the PC is half-duplex. The communication procedure is described in the following figure:

1.5.1. BEAMER® Monitoring and Control

BEAMER® monitoring and control includes the following functions:

- Detect status of each BEAMER® unit installed in a selected array.
- Receive indications from a selected BEAMER® unit
- Manually control the selected BEAMER® , for example, attenuator values and power amplifier operation.
- Software downloads into BEAMER® through the ICU.

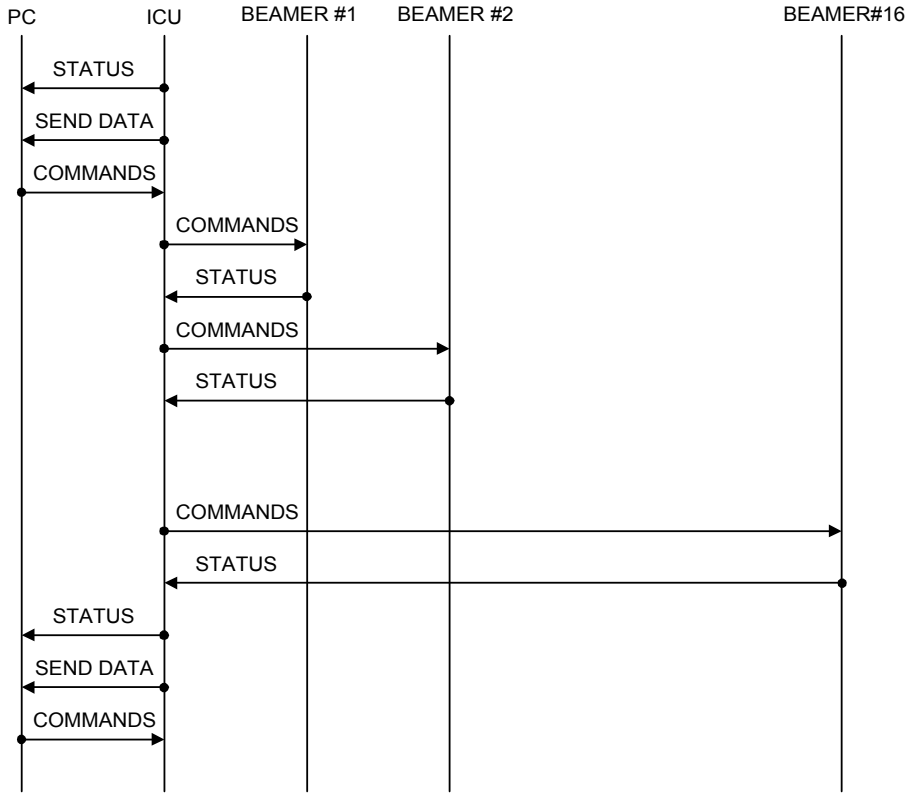

Figure 6: Communication procedure

1.6. DC Distribution

The DC supply to outdoor BEAMER® arrays is obtained by connecting the DC power supply of the BTS to the DC connections in the panel of the ICU. The DC voltage is supplied via the Tx and Rx coaxial cable coming up from the ICU to the BEAMER® unit or BEAMER® beamforming network.

Power Source	+24VDC to +28VDC
Max. Current Consumption	Up to 450mA with no BEAMER® arrays connected
Max. Current per BEAMER®	Up to 2Amp.

ICU Connectors

Tx Connector to BEAMER® Array	N-type connector, female
Tx Connector to Base Station Tx Port	TNC connector, female
Rx Connector to BEAMER® unit	N-type connector, female
Rx connector to Base Station Rx Port	TNC connector, female
Tx Control Connector	9 pin D-type connector
Rx Control Connector	9 pin D-type connector
DC Connector	Molex, 10 PIN, 40A capability connector.
Grounding Connection	By physically mounting the ICU with in the BTS

1.7. Maintainability Requirements

The BEAMER® family units including the ICU are designed as units for low Mean-Time-To-Repair (MTTR). The Modular structure of the ICU enables the internal circuits to be easily approached and replaced if found necessary.

Nevertheless, only an approved laboratory can do a full repair of an ICU or BEAMER® unit, since such a repair requires a full Acceptance testing.

2. INSTALLATION GUIDE

2.1. Applicable Documents

- PC to ICU Protocol, version No.9450002XX
- BEAMER® to ICU Protocol No.9450003XX
- BEAMER® specifications No.9530003XX
- ICU specifications, Scope No.9530006XX
- PCS 1x4x4 PolBEAMER® + ICU integrated system Spec. No. 953002900

This document describes the installation of the BEAMER® system, as integrated into Customer's BTS.

2.2. Scope

This document describes the installation of the BEAMER® System, as integrated into customer's -BTS.

The BEAMER® 1X4X4 Array System is basically a modular tower top LNA and power amplifier, with programming and modularity features that are uncommon with other, comparable systems. It replace the entire RF front-end of a PCS BTS and offers controllability and improved performance at reduced size and cost.

The document details the instructions for programming and field installation of the BEAMER® system. It is intended to be used by customer technical personnel, who are trained to install and service the BEAMER® system.

2.3. Important Safety Precautions

The system is supplied following extensive acceptance production line tests. Usually, lab tests will not be required before installing the unit at the customer's location. One should always be aware of the necessary safety precautions, assuring that the BEAMER® system will be fully functional after the installation.

Read this instruction guide thoroughly before starting with the installation. In case of doubt, do not hesitate to call Celletra customer support engineering. Celletra support can be reached at the address appearing at the beginning of this manual.

2.3.1. Handling and Moving the BEAMER® Array

The BEAMER® array is a delicate and accurate electrical apparatus.

Use extreme caution when handling the array. Always use the original box, with proper padding, when delivering or moving the unit. The overall unit weight is ~25kg. If necessary, the array should be carefully carried by two people, only for a short distance. BEAMER® array hardware is hermetically sealed in controlled environment. Do not open any radome covers or try to disassemble a BEAMER® module. This should be done only by Celletra authorized personnel. Do not paint the unit.

Never use adhesive tape on the radome surface, as this might severely affect the performance. Use extra caution when installing the unit on tower top. Use proper winch to lift the unit up the tower. Watch carefully for possible obstacles when lifting the unit. Pad the array, if needed, to avoid possible damage during lift-up. Never place the array on the front panel, with the radomes facing down, as this might cause radome breakage. Always place the unit on one of its sides.

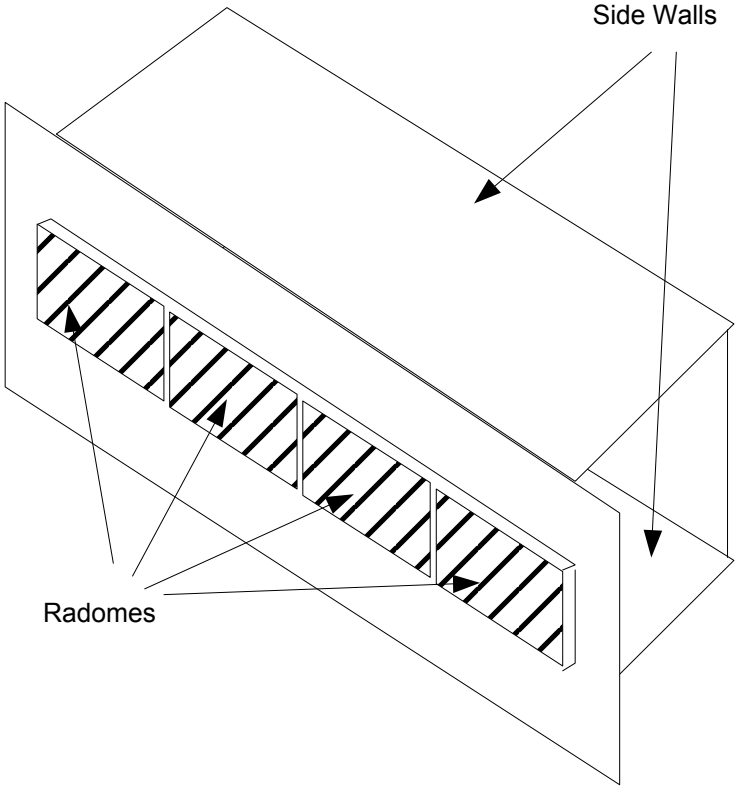

Figure 7: BEAMER® 4X4X1 Pol. BEAMER® array - front view

When installing the array always verify that the ICU power is OFF.

If it is not possible to turn the ICU power OFF (for example, when other sectors are connected to it), remove the fuse connected to the active Bias-Ts serving the installed array. When replacing or re-inserting the fuse in the ICU, always turn the ICU power OFF before removing the fuse cover.

2.3.2. System Measurement and Testing Conditions

Live +24VDC with high current capability exists on the Tx ABT output and the Rx ABT input (all the N-type connectors at the ICU external RF interface). Use extreme care when handling these ports. It is strongly recommended to disconnect the DC power to the ICU, whenever possible, before each and every cable connection to the Tx ABT outputs or the Rx ABT inputs.

Always use a DC block device connected to the measuring equipment input or output ports (spectrum analyzer, power meter, or RF signal source), when measuring ICU of BEAMER® array performance.

Before applying RF power to any port of the system (either ICU or BEAMER® array) always turn the DC power ON. Never apply any RF input power with the unit's DC power OFF.

> *Do not apply more than +20dBm of RF input power to any RF port of the BEAMER® system, or irreversible damage may occur.*

When measuring high power outputs, always verify that the equipment probe is capable for handling the expected output power.

With DC power ON and the nominal RF input applied, BEAMER® -Tx radiators produce 2Watts of RF power per module, 8 Watts per array, and approximately 150Watts EIRP.

When testing the units in lab or during field installation, always practice RF radiation safety rules.

During lab tests, with DC voltage applied to the array, do not use any PCS mobile transmitter in a range of less than 10 meters from the BEAMER® array. An unexpectedly high RF power might appear at the Rx output, which might in turn damage the measuring devices connected to that port.

2.4. ICU Operation Instructions

2.4.1. DC Connections and Fuse Replacement

2.4.1.1. DC Wiring

The ICU should be connected to 24±4 VDC power supply. A minimum of 14AWG wires should be used, for minimal DC voltage drop. The following diagram shows the DC connection to the MOLEX DC connector. The three wires connected to each pin at the connector should be tied together as close as possible to the DC voltage source.

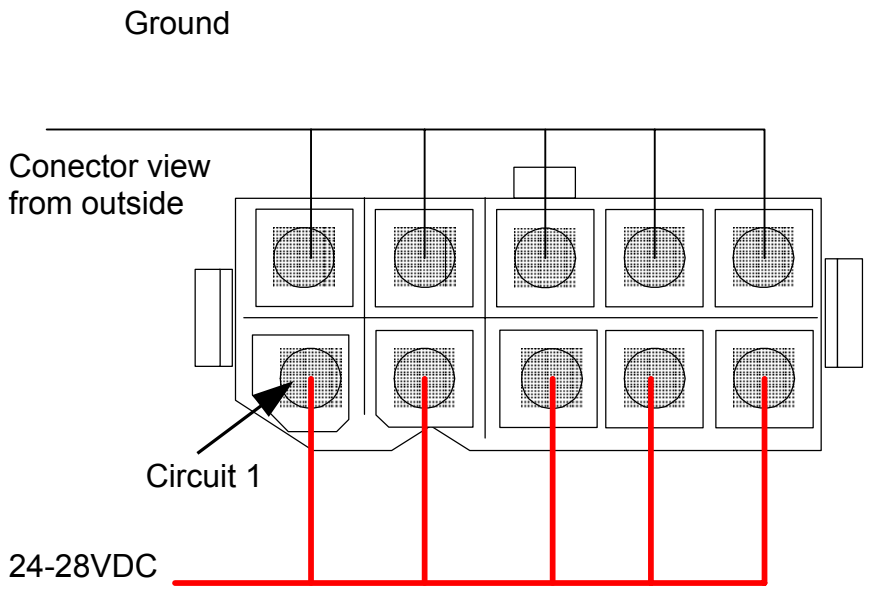

Figure 8: DC wiring

2.4.1.2. Fuse Replacement

Fuses are located under the fuse compartment panel on the front panel. To access the fuses, remove the panel (2 screws). Tx fuse is 20Amp. Rx fuse is 5Amp.

The fuses are aircraft circuit breakers that can be used to turn off a whole sub-array.

Remember to disconnect the RF drive (or to turn the RF drive OFF) before turning the DC power OFF.

Figure 9: Fuse and backup battery location

2.4.2. Connecting the Unit to a Host PC or BTS Controller

2.4.2.1. Serial Communication Connector

Communication with BTS controller RS232 connector interface is located on the left side of the MOLEX DC connector on the rear panel. It is a standard 9-pin female D-type connector.

Table 1: RS232 communication connector

Pin #	RS232
1	NC
2	Rx Data
3	Tx Data
4	NC
5	Ground
6	DSR
7	RTS
8	CTS
9	NC

2.4.2.2. Communication Mode

The communication mode at the ICU controller board is enabled for RS232 by the communication switch is SW1at OFF position. Four switches are located on this SW1, used for other ICU settings.

Caution: The user should not change the setting of these switches, unless specifically advised by Celletra. An unauthorized, uncontrolled change of these switches might produce unpredictable system behavior.

The RS232/RS485 DIP switch is the last switch at the far-left side of the PCB, when viewed from the ICU front, as shown in the following figure.

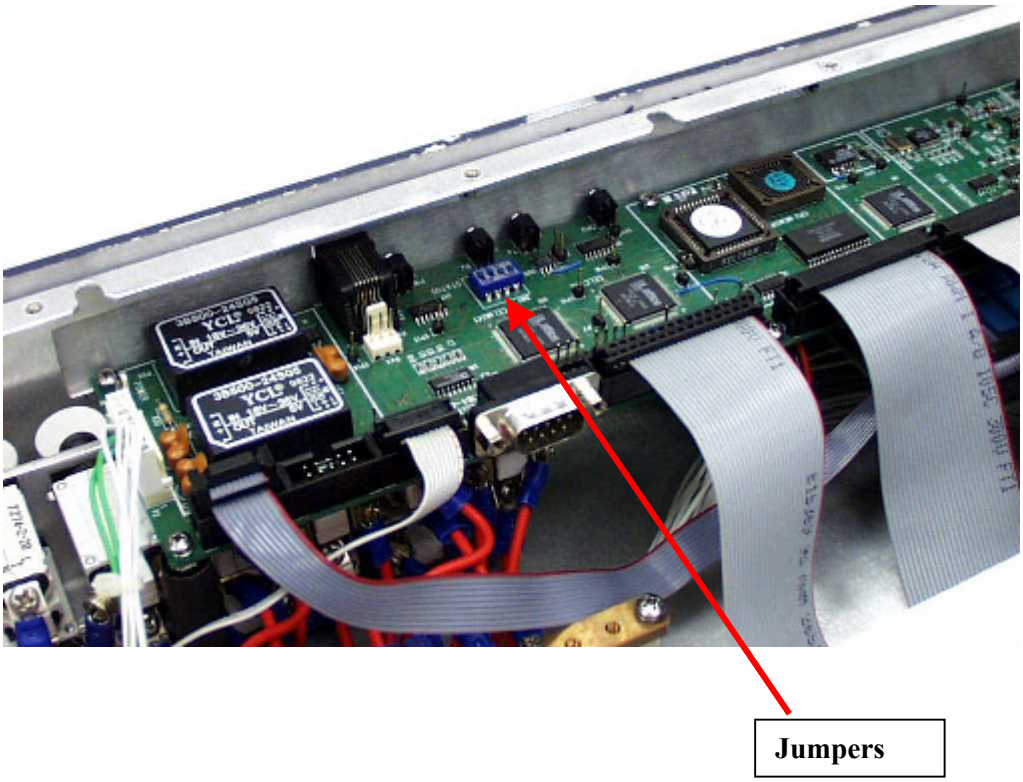

Figure 10: Serial communication ports and on-board jumper locations

It is possible to communicate with the unit via the RS485, using a commercial RS485-RS232 converter. As an example, ADAM-4520 from Advantech can be used for this purpose.

2.4.3. Replacing the Back-Up Battery

The ICU controller board is equipped with 3Volt battery, used for NVRAM and real-time clock keep-alive function. Under normal operating conditions, this battery should be replaced every three years. Failure to replace the battery will result in loss of the configuration data and the real-time clock setting, following power down. Although this is not critical, we recommend changing the battery once every 2 years, or at every scheduled maintenance.

Before changing the battery, record the ICU configuration. We recommend creating a batch file, within the BTS controller software, to reload the original ICU configuration after battery replacement.

To access the battery, turn off the ICU. Remove the ICU front cover. The battery opening is located on the left side panel under the RS-232 connector. Use a small screwdriver to

carefully push the battery out. Insert a 3Volt, CR2032 type Lithium battery. The + side of the battery should be pointing to the side panel. Reinstall the front cover.

It is possible to replace the battery under live DC voltage applied to the ICU, if one does not wish to interrupt the BTS operation, even during scheduled maintenance. In this case, you should use extreme care not to short the ICU controller circuitry.

2.4.4. Bias-Ts

In this manual, Bias-Ts are also termed 'sub-array', since each Bias-T can serves an independent portion of an array (i.e., Tx sub-array or Rx1 and Rx2 sub-arrays, which are all physically part of the same array, but are logically independent entities).

The Bias-Ts serve four purposes:

1. Supply DC voltage to the BEAMER® modules within the sub-array.
2. Provide DCA controlled RF amplification stage, to overcome possible RF distribution losses and to provide control on the transmitted or received output power per sub-array.
3. Connect the BEAMER® modules Telemetry to the ICU controller via the superimposed FSK link.
4. Enable the S/W downloading to each BEAMER® of the array using the Telemetry channel.

The sub-array direction of the ICU Bias-T connector is N-type connector, capable of supporting the DC current to the sub-array. The BTS side is TNC type connector. The following figure shows the active Bias-T location on the ICU.

Figure 11: Bias-T inputs / outputs and numbering

Viewed from right to left, the Bias-Ts are organized as:

[Rx_1-Rx_2-Tx], [Rx_1-Rx_2-Tx], [Rx_1-Rx_2-Tx], [Rx_1-Rx_2-Tx]

Bias-T number 1 is on the far right going to Bias-T number 12 at the near left. These (physical) numbers also serve as logical addresses for the Bias-T (sub-arrays) at the system setup.

In case less arrays are integrated in the system, the number of Bias-Ts will be reduced.

2.5. Array Installation

The BEAMER® array provides coverage of ±45° for the azimuth, ±7° for the elevation at –3dB points. A mechanical tilt, continuous up to 15°, is provided. We recommend using a 3-4 inch diameter pole for the array installation. The figures later in this section illustrate the installed array with the doors open, showing the Tx and Rx cables connections.

The unit should be connected to the main RF cables feeding the array. The RF lines should have total RF loss of less than 8 dB and a DC resistance lower than 0.2 Ohms, for 50 meters long cable. 3/8" or 1/2" or 5/8" cable can be used. When connecting these cables to the array on one side and to the ICU on the other, use proper moisture sealing methods, if required depending on the connector type used.

Sealing and weatherproofing of RF connector is of prime importance to assure good electrical contact, minimizing DC loss and passive RF inter-modulation effects. Thus, special care should be taken with the RF connectors sealing and weatherproofing especially at the array input connectors that are exposed to extreme environmental conditions. Common sealing practice should be used.

For sealing instructions, refer, for example, to Andrews weatherproofing recommendations with 3M™ Cold Shrink™ Weatherproofing Kit, or an equivalent sealing method.

Before installing the BEAMER® array, note that each array has a Tag attached to it. After installation remove the tag and keep it. This tag carries the BEAMER® modules address and location within the array.(This address is the serial number of each BEAMER® unit as appear on the module label nearby the Rx connector).You will need these IDs later, for system configuration setup.

2.6. Assembly Instructions for the PCS 1x4x4 Array

2.6.1. Mounting Assembly (Figure 12):

1. Mount the securing clamps (4) on the pole (1) at the location approx. close to the bottom side mounting assembly. Tighten the screws using 9/16 wrench.
2. Mount the mounting assembly on the pole (1) and secure the two clamps (2) with the wing nuts (3). Tighten the four wing nuts (3) using 9/16 wrench.
3. Adjust azimuth:

   ~~One.~~a. Loosen the 4 wing nuts (3) and rotate till you have reached the required azimuth.

   ~~Two.~~b. Tighten the 4 nuts (3).
4. Adjust elevation:

   ~~One.~~a. Loosen the 6 bolts (6) (on both sides of the mounting assembly).

   ~~Two.~~b. Release the latch (5) and adjust the tilt. Once the tilt is set, lock in position using the latch (5).

   ~~Three.~~c. Tighten the bolts (6).

2.6.2. BEAMER® Array Mounting (Figures 13 and 14):

1. While the BEAMER® array is hanging by the lifting hook (7) put the BEAMER® array on the lower fork (8) of the mounting assembly.
2. Push the upper section of the BEAMER® array until its upper bolts engage the upper forks (9) of the mounting assembly and secure them with the lever (9).
3. Tighten the 4 wing nuts (X) using 9/16 wrench.
4. Connect the Rx1, Rx2, Tx and grounding cables (10-13).

2.6.3. BEAMER® Array Dismounting (Figures 13 and 14):

1. Insert the winch cable hook through the bracket(7) located on top of the array.
2. Disconnect the Rx1, Rx2, Tx and grounding cables.
3. Release the 4 wing nuts |(X).

   ~~One~~ a. Release the module from its upper forks (9') by pushing the lever (9) and rotating the array approx. 30 deg. downward around the lower forks (8).
4. Remove the array by lifting it and pulling it out from the lower forks (8).

2.6.4. BEAMER® Dismounting (Figure 15):

1. Release 2 wing nuts (14), rotate the BEAMER® assembly until it stops with a "click" latch.
2. Open the right hand door by releasing 2 thumb screws (15).
3. Dismount the BEAMER® by disconnecting its Rx and Tx connectors, then insert a Phillips screwdriver (#6x300 mm) through holes "H" to engage the screws (6 captive screws for each BEAMER®).
4. Dismount BEAMER® "A" by first dismounting the lower roof (RL) by removing 6 screws (4-40 UNC Phillips flat 100 deg.). Dismount BEAMER® "D" by first dismounting the upper roof (RU) and the lifting hook (7) by removing 6 screws (4-40 UNC Phillips flat 100 deg.). BEAMER® s "B" and "C" can be dismounted directly.

2.6.5. BEAMER® Mounting (Figure 15 and 16)

1. To mount BEAMER® "A", the lower roof (RL) should be dismounted. Engage the BEAMER® "A" in place and secure its 6 captive screws with the long screw driver (Phillips #6 x300 mm), mount the lower roof (RL) and secure it with 6 screws (4-40 UNC Phillips flat 100 deg.), connect the Rx and Tx connectors.
2. BEAMER® s "B" and "C" can be mounted directly by using the long screw driver. Connect the Rx and Tx connectors.
3. To mount BEAMER® "D", the upper roof (RU) and the lifting hook (7) should be dismounted. Engage BEAMER® "D" in place and secure its 6 captive screws with the long screw drivers. Put the lifting hook (7) in place then mount the upper roof (RU) and secure it with 6 screws (4-40 UNC Philips flat 100 deg.), Connect the Rx and Tx connectors.
4. After the BEAMER® s are secured in place, close the right hand door by securing the thumb screws (15).

5. Release the BEAMER® assembly. By pushing button (16) (Fig. No. 16) downward, rotate the array and secure the wing nuts (14) in place.

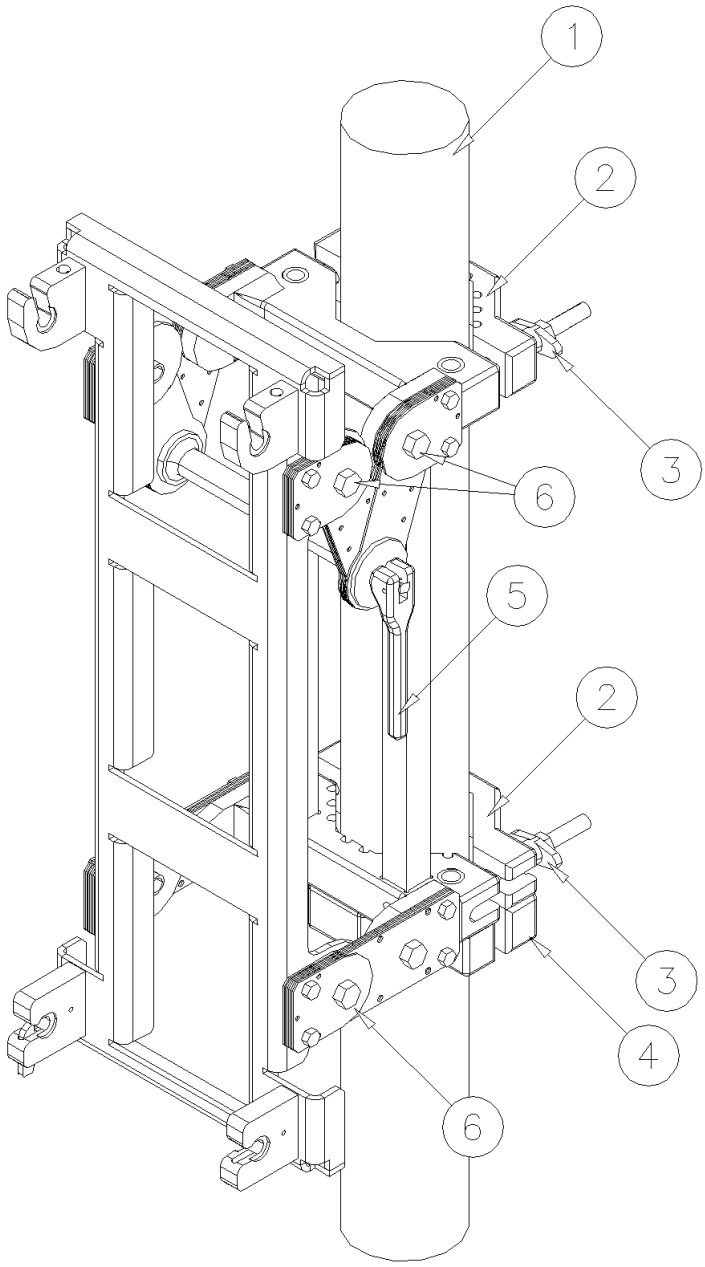

Figure 12: Mounting Assembly.

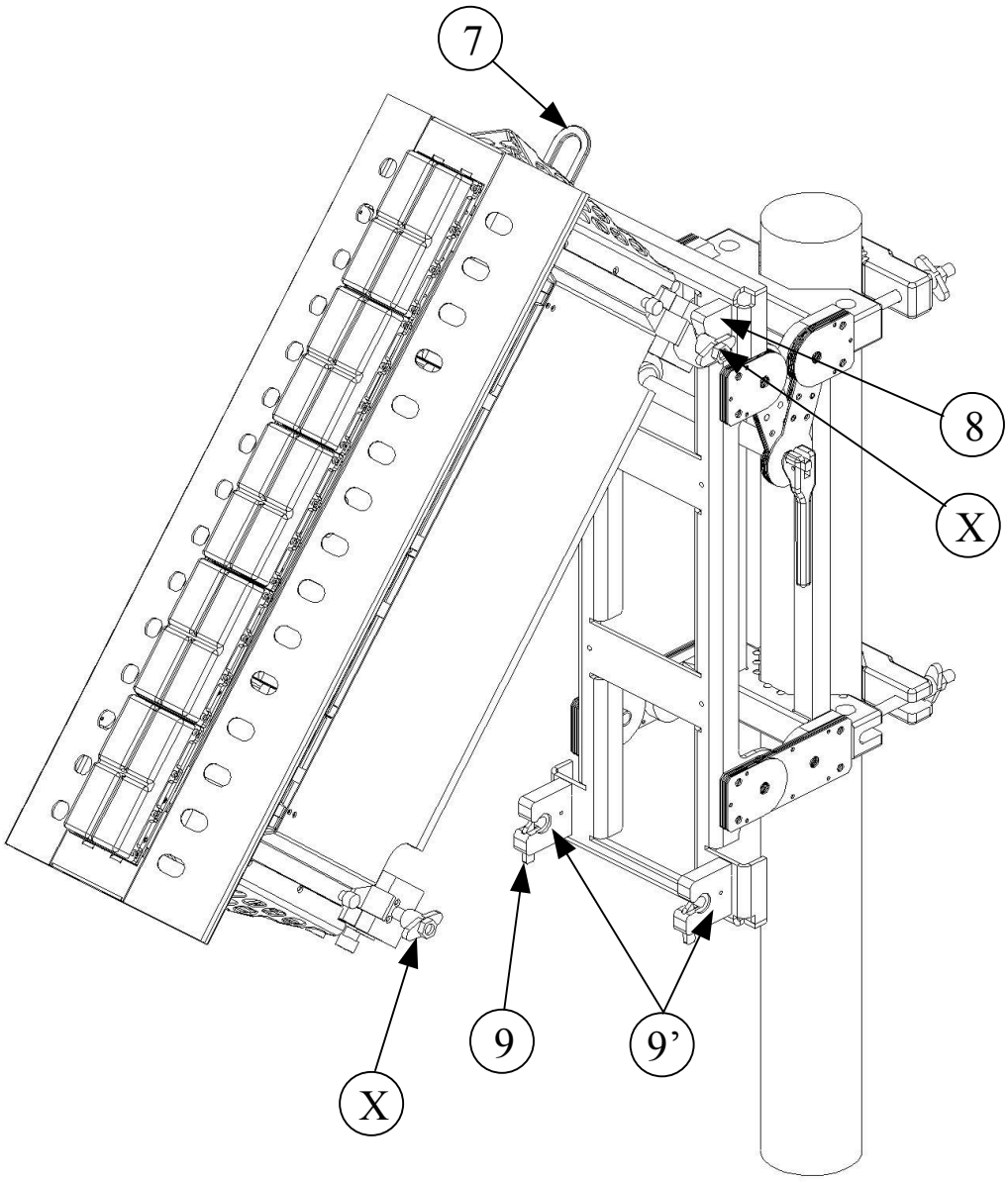

Figure 13: BEAMER® Array Mounting/Dismounting (Lower fork)

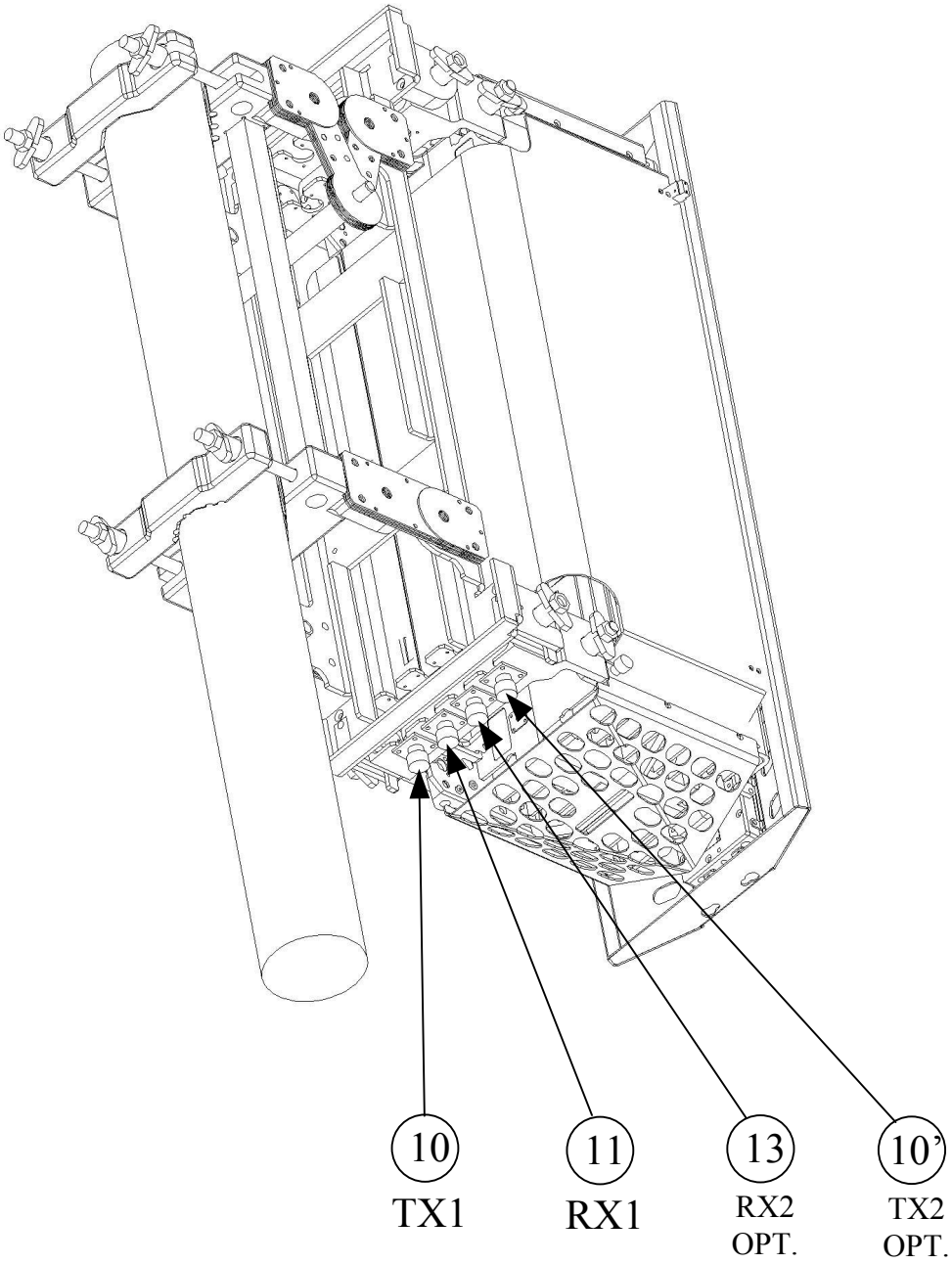

Figure 14: BEAMER® Array Mounting/Dismounting (Upper fork)

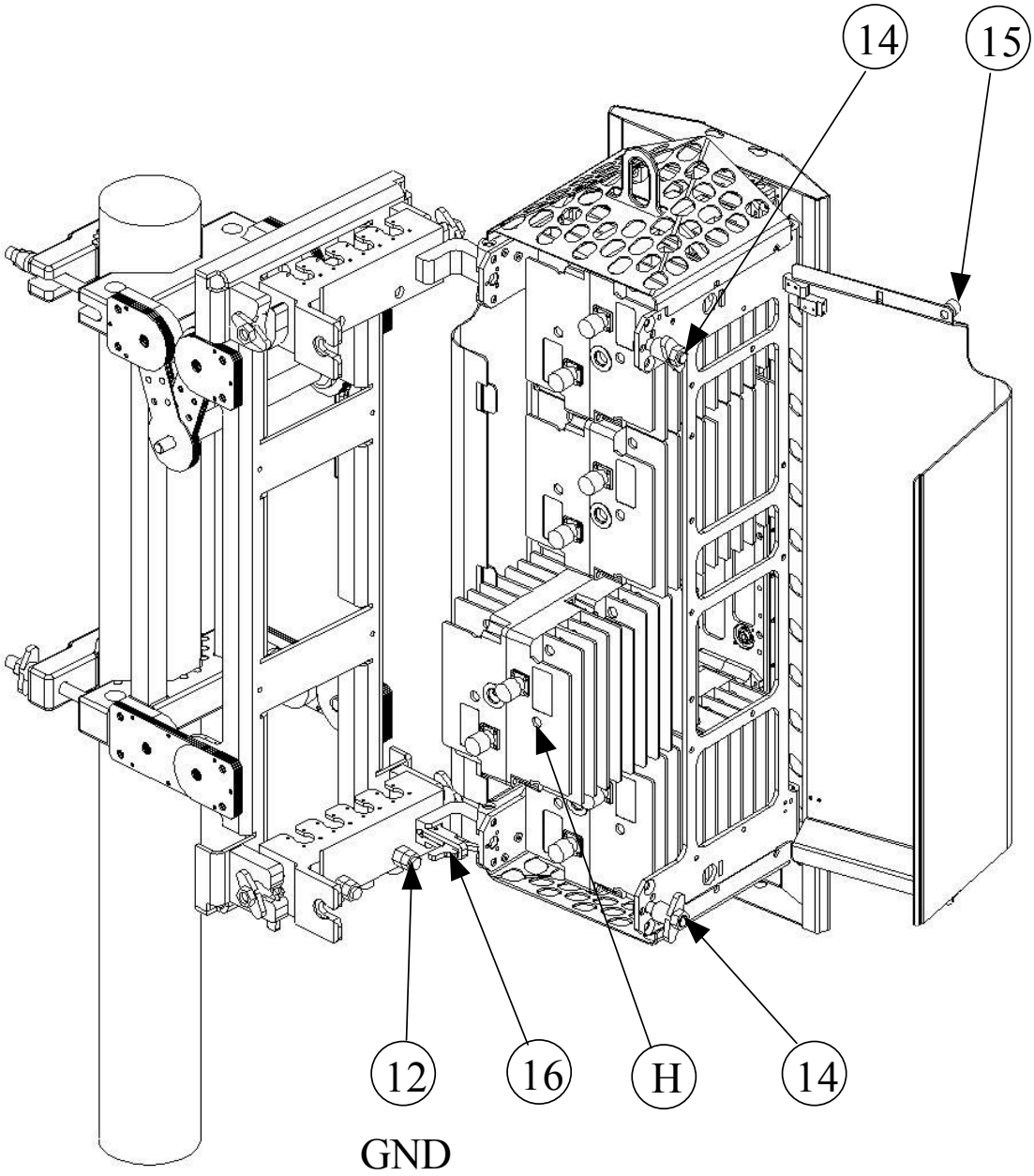

Figure 15: BEAMER® dismounting

2.7. PCS 1x8x8 Array Assembly Instructions

1. Mount the securing clamps (12) on the pole (1) at the location approx. close to the bottom side of the mounting assay. Tighten the wing nuts using 9/16 wrench
2. Mount the Mounting assay. On the pole (1) and secure the clamps (2) with the wing nuts (3). Tighten the wing nuts using 9/16 wrench
3. Untighten the bolts (6) a bit so the hanging arms (7)&(11) are free to swivel around the secondary pole (10).
4. Pull the plunger (8) and turn the bottom set of (7)& (11) counterclockwise until the plunger (8) locks in place about 60 deg of the center position.
5. Pull the plunger (8) and turn the top set of (7)& (11) clockwise until the plunger (8) locks in place about 60 deg of the center position.
6. Insert the arrays threaded pins (13) for the bottom and (15) for the top at the groove of the lower forks (7) and then press the top threaded pins in place at the upper forks (11). Make sure the latch(9) turns up and then falls back in place to secure the top pins of (13)&(15)
7. Tighten the wing nuts of all the pins (13)&(15). Using 9/16 wrench.
8. Release the plungers (8) and rotate the antennas back in place.
9. Tighten the bolts(6) using 9/16 wrench
10. Connect the Rx and Tx Cables coming out of the rear divider which is mounted on the lower half of the secondary pole(10) to the top (16) and bottom(14) connector flanges.
11. To adjust the Azimuth :
12. Untighten the wing nuts (3) and rotate till you have reached the position .
13. Tighten the nuts (3).
14. To adjust the tilt of the antenna :
15. Untighten the 6 bolts (4) (on both sides of the mounting assay).
16. Release the latch(5) and adjust the tilt , once the tilt is set lock in position using the latch(5).
17. Tighten the bolts (4) .

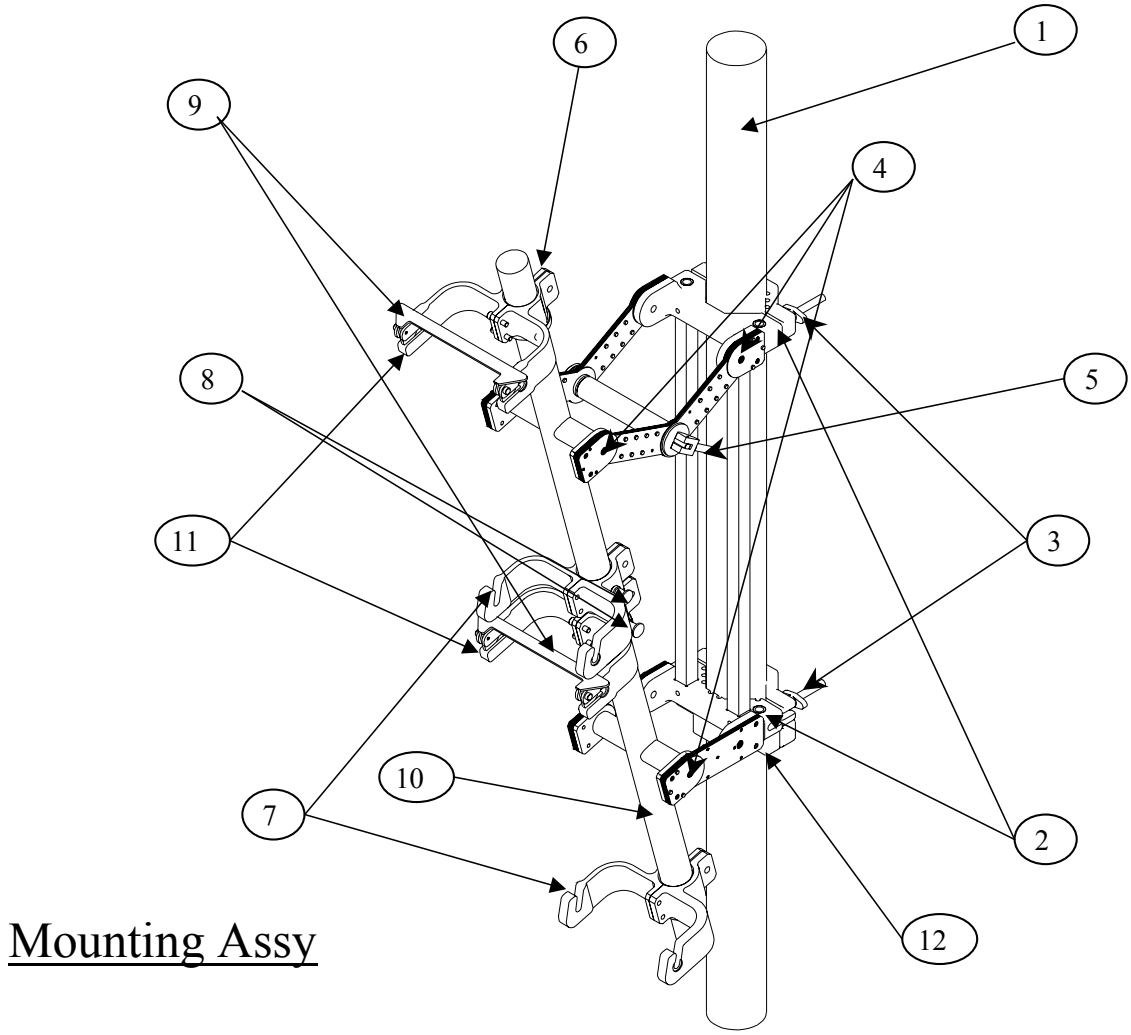

Figure 16: Mounting Assy.

Bottom Array

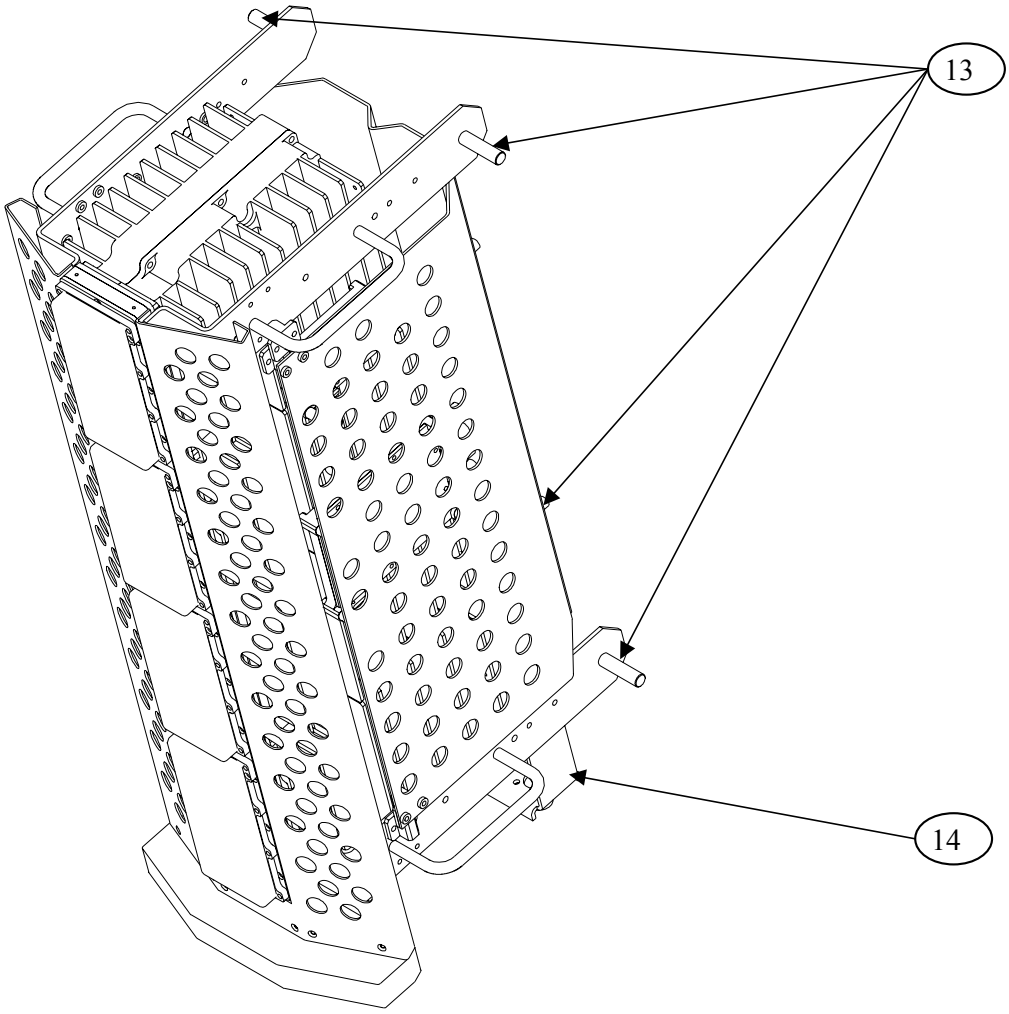

Figure 17: Bottom Array

Top Array

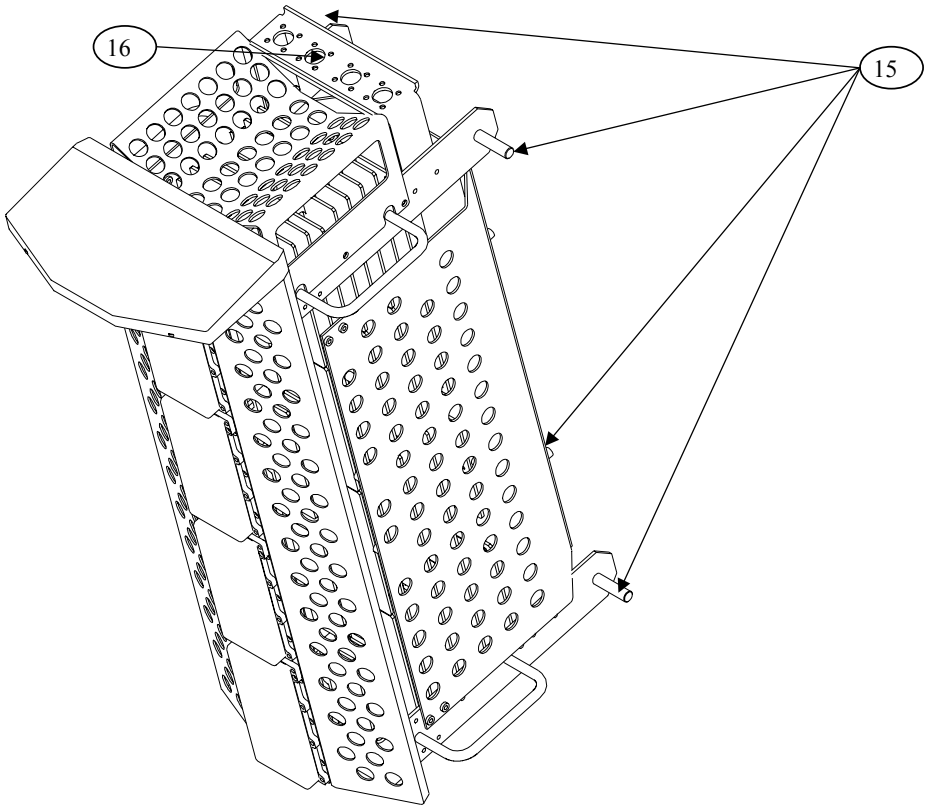

Figure 18: Top Array

2.8. BEAMER® System Setup

2.8.1. System Block Diagram

The following diagram shows the system connection for a single sector Pol. BEAMER® array. A single ICU can support up to four sectors, each connected as described in the figure.

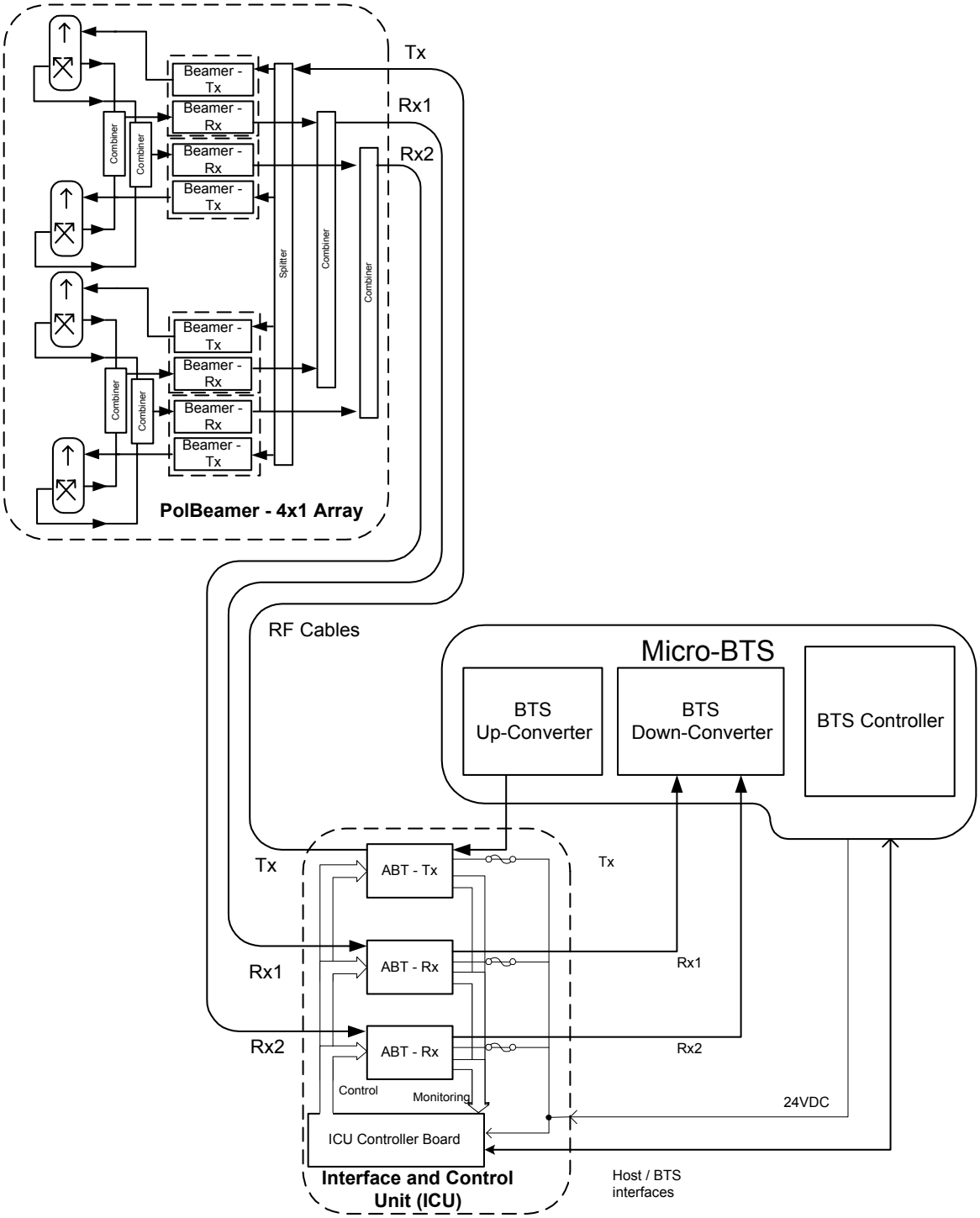

Figure 19: BEAMER® single pol. – sector connections block diagram

The sector is configured as pol. BEAMER® configuration, in which two Rx channels are used for polarization diversity reception and one Tx channel is used for transmission. Other Configurations are easily implemented.

2.8.2. Logical Addresses and System Components

The BEAMER® system setup treats the system block diagram as a hierarchy tree, with the BTS at the top and the BEAMER® modules at the bottom.

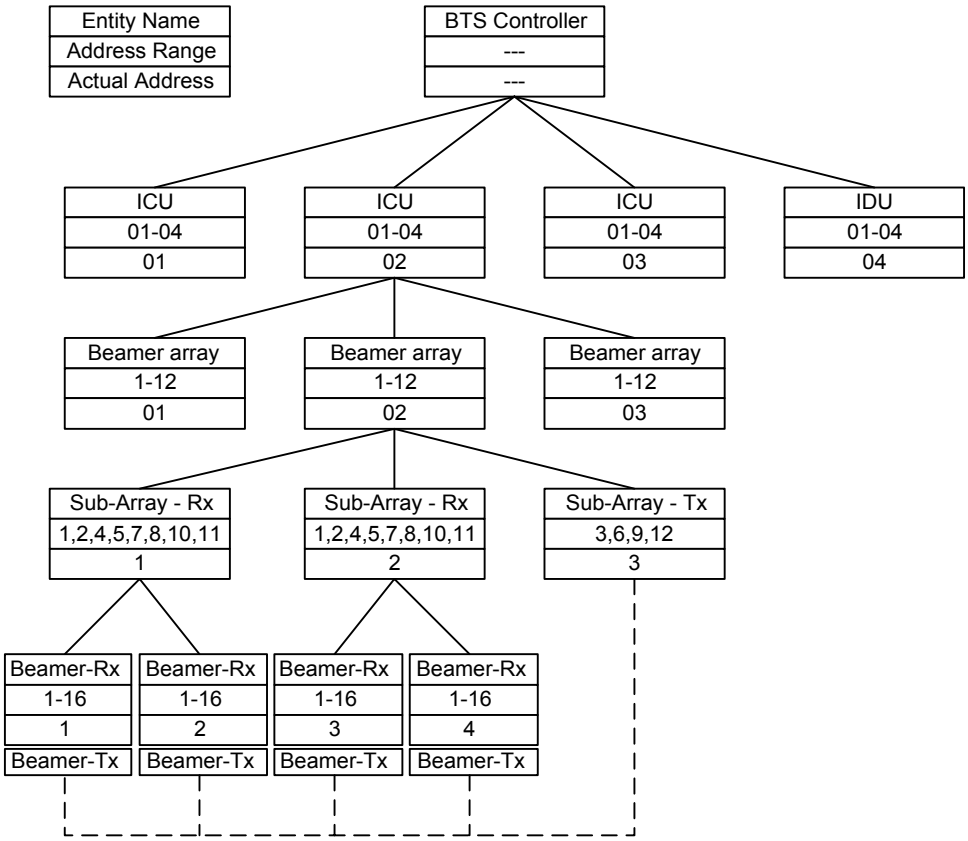

Figure 20: BEAMER® system entities and their logical relationships

The figure above shows the logical entities for a BEAMER® system. The top left block can be used as a legend: each entity is defined by its name, its available address range, and its actual address.

The figure shows a BTS, connected to four ICUs. Each ICU is connected to three physical arrays (for simplicity, the tree is expanded for one ICU and one array only). Each array consists logically of three sub-arrays (Bias-Ts): two Rx sub-array and one Tx sub-array. Each Rx sub-array connects logically to two Rx BEAMER® controllers. This connection logically controls both the BEAMER® Rx board and the BEAMER® Tx board. The Tx sub-array has a dummy logical relation with the Tx- BEAMER® module, since its actual logical control is via the Rx- BEAMER® block (this relation is shown as dashed line). However, the Tx- BEAMER® has actual physical relation with the Tx sub-array, by virtue of the RF connection between them.

The actual logical addresses shown on the figure were chosen from the available address range and are actually arbitrary. However, with the ICU Bias-T organization it is easier to group the Bias-Ts as Rx1,Rx2,Tx per array. In other words, the following sub-arrays groups should be assigned for each array (sector):

- Sub-arrays (1,2,3) - array #1
- Sub-arrays (4,5,6) - array#2
- Sub-arrays (7,8,9) - array#3

- Sub-arrays (10,11,12) - array#4

The following table summarizes the available address range for the system entities:

Table 2: BEAMER® system logical addresses range

Name	Address range
ICU	01 to 04. Address 00 reserved for testing
Array	01 to 12(03). For Micro- ICU: maximum 03 (always pol. BEAMER®)
Sub-array (Bias-T)	01 to 12(09). For Micro- ICU: Same as physical address, maximum 09.
BEAMER®	01 to 16. Address 00 reserved for testing

2.8.3. System Configuration and Setting

Some of the ICU setup are already configured for the needed system configuration. This setup is saved on the ICU's Flash memory. Using the PC to ICU protocol commands, you can verify that the ICU is properly set.

The following sections will guide you through the process of ICU setup verification. You can modify the setup to match your configuration at any time.

Throughout this section, some command examples and data will be used. As a rule, all commands data and commands codes are given here in decimal representation, unless specifically specified, using 'H' prefix for hex numbering. Also, it is assumed that the reader has some knowledge with the PC to ICU protocol, given in [1]. The command sequence described in this section should be referred to as a system configuration guide, not as a PC to ICU programming manual. For more information, refer to the applicable documentation listed at the beginning of this chapter.

Before setting up the system, avoid connect RF cables between the ICU and the BEAMER® array. Since the Tx and Rx gain are not calibrated yet, this is done to protect the BTS interface and the BEAMER® array from overdrive conditions.

The following table can be used as a reference for the ICU and BEAMER® array setting. The table specifies the pre-set default values and points to the specific command code, used for reading or saving a parameter value.

> *Note: Many values are not set. The following sections will instruct you how to set these values, tailored to the specific on-site installation.*
>
> *Caution: some values (such as RS-232/RS-485 switch ,Time out and codes 1,137,141,145-149) are factory set and should not be changed on location. In part ICU are, these values relate to the BEAMER® array calibration and operation modes. Modification of these values, without coordination and specific authorization from Celletra engineering, can cause invalid array performance and should be avoided. The changes are possible by the highest password authorization only.*

Table 3: ICU - BEAMER® default values and quick reference

Parameter	Save code	Read code	Data bytes default value	Required for µICU
Operation Mode	05	06	00-Auto	00-Auto
Control Mode	07	08	00-Main, 01-Local	00-Main, 01-Local
ICU configuration (jumper positions)	N/A	09	01-Operation 01-I/O installed 00-MODEM not installed 00-RS-232/RS485 disabled	01-Operation 00-I/O not installed 00-MODEM not installed 01-RS-232/RS485 enabled
System Features	10	11	Not set	# of arrays - 03 arrays type BEAMER® - 00
Array configuration	12	13	Not Set	See 2.8.3.2
Bias-T configuration	14	15	Not Set	See 2.7.3.3
Bias-T type	16	17	01 01 02 01 01 02 01 01 02 01 01 02 02-Tx 01-Rx 00-Not installed	01 01 02 01 01 02 01 01 02 00 00 00 See also 2.8.3.4
Bias-T attenuation	18	19	Not set	See 2.8.4
BEAMER® limits	20	21	Not set	See 2.8.4.4.1
ICU limits	22	23	Not Set	See 2.8.4.4.2
Bias-T limits	24	25	Not Set	See 2.8.4.4.2
Alarm Conditions	26	27	Not Set	See 2.8.4.4.4
Time out	36	37	BEAMER® - 128mSec ICU - 5 minute	Do not change. Cannot be accessed in operation mode.
Real time clock	38	39	Set to Israeli time zone	Set to location time zone
BEAMER® configuration	133	134	All ON. Attenuation = 0dB.	All ON. See 2.8.4.3
Shut-down conditions	135	136	All ON	All ON. See 2.8.4.4.3
Other BEAMER® parameters	1, 137, 141, 145-149		Factory set. Not intended to be changed on location! These commands cannot be accessed in operation mode.	

The following sections describe how to configure the system step-by-step.

2.8.3.1. Set ICU Operation Mode

The ICU configuration setup can only be changed when the ICU is set to SLAVE mode. The default ICU configuration is AUTO. To switch to slave mode use 'save operation mode' command (code 05), with parameter 01. Note, however, that if the ICU communication is left unattended for longer than the time out, defined by 'save time out' command (code 36) [default value is 5 minute], the ICU will automatically switch back to AUTO mode. Only the following commands are available in AUTO mode:

- Save operation mode (05)
- Read operation mode (06)
- Save control mode (07)
- Read control mode (08)
- Read array status (28)
- Read BEAMER® status (29)
- Read ICU status (30)

In AUTO mode, any other command will be responded by an error message (code 34, data 01 xx xx xx xx).

2.8.3.1.1. Checking the ICU System Address and ICU ID

The ICU system address and the ICU ID can be easily modified[1], to suit your needs. To change the ICU address you should know the ICU ID.

You can read the ICU system address and its ID as follows:

Sent command	Code	Data	Response from ICU	Remarks
Read **ICU** ID	02	00	X1 X2 X3 X4	Every **ICU** answers when addressed by 00
Read **ICU** system Address	04	X1 X2 X3 X4	X1 X2 X3 X4 Y	Use **ICU** ID (X1 X2 X3 X4) to find **ICU** address (Y)

2.8.3.1.2. Changing the **ICU** System Address

Caution: ICU ID is located on the unit label. The unit label is attached to the -ICU front panel (the fuse panel). The ICU ID is its physical number. Do not modify the ICU ID, unless authorized by Celletra engineering support.

Once the ICU ID and system address are known, you can easily modify the system address to any other value. The following sequence demonstrates how to change the ICU system address from Y to 04, using known ICU ID 101 102 103 104.

[1] ICU ID cannot be changed in operation mode. Issuing command code 01 in operation mode will produce an error message.

Sent command	Code	Data	Response from ICU	Remarks
Save ICU system address	03	101 102 103 104 04	ACK	Change system address from Y to 04 using known ID 101 102 103 104

Note: ICU system address ranges between 01 to 04. ICU address 00 is reserved for system configuration and should not be used.

2.8.3.2. Configuring the Number of BEAMER® Arrays

The 'save system features' command is used to configure the number of connected BEAMER® arrays. Use this command to add or remove an array (logically) from the system. To set the number of installed arrays to 2, use:

Code 10 (save system features), ICU address, 02, 00 (BEAMER®)

Note: Issuing the 'save system features' command will erase the previous BEAMER® configuration. Previous definitions of arrays and Bias-T assignments must be reprogrammed, following this command.

2.8.3.3. Bias-T Definitions

Once the arrays are configured, a Bias-T must be assigned for each array. 'Save Bias-T configuration' command (code 14) is used for assigning the Bias-T for the arrays. For example, the following command assigns Bias-T #1, 2, and 3 to array #1:

Code 14 (save Bias-T configuration), ICU address, 01 (array address), 07 00 (Bias-T #1,2,3 assigned)

Bias-T addresses and Bias-T physical locations are the same (i.e. Bias-T number 1 is mapped to Bias-T address 1, and so forth).

Note: Bias-T assignment is bit-wise representation of the command data bytes. Also note that the above command does not configure the Bias-T type (Tx or Rx). Repeat for every installed array in the system.

2.8.3.4. Configuring the Bias-T Type

Using the command 'save Bias-T type' (code 16) will define the Bias-T type for the ICU (note that this logical definition must agree with the actual, physical Bias-T type, as installed at the ICU. For ICU, this is always Rx-Rx-Tx-Rx-Rx-Tx-Rx-Rx-T- right to left, form the rear). This logical definition does not change for the ICU.

The following example defines ICU Bias-T installation:

Code 16 (save Bias-T type), ICU address, 01 01 02 01 01 02 01 01 02 01 01 02 02

Note: For Bias-Ts not installed, thus will appear as 00.

2.8.4. Setting the Bias-T Attenuation

Bias-T attenuation, for either Rx or Tx Bias-T, can be modified with the command 'save Bias-T attenuation' (code 18). Command 'read Bias-T attenuation' (code 19) can read these settings.

Example: To change the Bias-T attenuation for Bias-T #3 (in this case, a Tx Bias-T) to 12dB (=24 or 18H), use the following command:

Code 18 (save Bias-T attenuation), ICU address, 03, 18H

2.8.4.1. BEAMER® Array Module Registration

The command 'save BEAMER® system address' (code 131) registers BEAMER® module with ID # AA BB CC DD with system address SS. The BEAMER® module ID can be located on the BEAMER® module label. An unknown BEAMER® ID can be found by issuing a 'read BEAMER® system address' command, with address 00. Note however that since every installed BEAMER® module will respond to address 00, it is impossible to issue this command for an array. Therefore, the installed unit ID must be retrieved from the unit label, or from the Tag accompanying each array and removed when the array is installed.

Important note: The BEAMER® ID is saved on the module's NVRAM during production, and cannot be changed.

Example: The following command assigns a system address 01 to BEAMER® module with ID 1004, converting 1004 to 000003ECH:

Code 131 (save BEAMER® system address), ICU address, 00, 00, 03, ECH, 01

Repeat the above command for every installed BEAMER® module in the array.

2.8.4.2. Configuring the Array

The 'save array configuration' (code 12) command will match the installed array with the ICU. It will also tell the ICU the number of installed modules on the array (in our case, 4).

Example: The following example describes array with system address 01, with four BEAMER® modules installed.

Code 12 (save array configuration), ICU address, 01, 0FH, 00

Note: The BEAMER® module assignment is bit-wise representation of the command data (i.e. 0FH=00001111B, or first four BEAMER® modules are assigned).

2.8.4.3. Configuring the Default BEAMER® Setting

Command 'save BEAMER® configuration' (code 133) can change the default BEAMER® module power amplifier conditions and Tx and Rx attenuation. The default setting for this command is ON for the main and correction amplifier, and 0dB for the attenuation.

The following example shows how to set the Tx attenuator to 10dB, Rx attenuator to 0dB, for BEAMER® at address 12(0C), with main and correction amplifiers set to ON:

Code 133 (save BEAMER® configuration), ICU address, 0CH, 01, 01, 0AH, 00, 00

Important Note: Turning OFF the correction amplifier might cause serious CDMA spectrum distortion. Celletra does not recommend changing this setting without consulting Celletra engineering personnel.

2.8.4.4. Configuring and Defining the System Properties

The previous commands configured the ICU controller to recognize the installed array and BEAMER® modules. The procedure described above should be repeated for every installed array (up to three arrays can be supported with a single ICU). The following commands define the system properties, and are independent of the number of installed arrays. These system properties define the alarm and shut-down conditions and limit for both BEAMER® and ICU. Setting the BEAMER® and ICU limits affects the status reading received when issuing the read status commands (i.e. 'read ICU status' (30), 'read BEAMER® status' (29), 'read array status' (28) and 'read Bias-T status' (19)).

2.8.4.4.1. Setting the BEAMER® Limits

Another means to control the failure conditions, built-in the BEAMER® controller, is the 'save BEAMER® limits' command (code 20). This command sets the range for which a failure is declared. These values can be changed to the customer's preferences, in conjunction with the failure conditions declaration (code 26.).

The following table contains Celletra's recommendations for the BEAMER® module limits conditions:

Table 4: BEAMER® limits recommended settings

Description	Recommended Value (decimal)	Meaning
Temperature min	2	-20°C
Temperature max	20	+70°C
Input power min	4	-14dBm
Input power max	15	-3dBm
Output power min	2	22dBm
Output power max	14	34dBm
Tx attenuator min	0	0dB
Tx attenuator max	31	15.5dB
Main Rx attenuator min	0	0dB
Main Rx attenuator max	31	15.5dB
Div Rx attenuator min	0	0dB
Div Rx attenuator max	31	15.5dB
BEAMER® supply voltage min	118	13VDC
BEAMER® supply voltage max	255	28VDC

2.8.4.4.2. Setting ICU Limits

Similar to the command for the BEAMER® limits, commands 'save ICU limit' (code 22) and 'save Bias-T limits' (code 24) set the limits for the ICU, determining the failure conditions.

These limits can be changed to the customer preference (up to a given, reasonable range). The following table sets the recommended limits for the ICU and the Bias-T.

Table 5: ICU limits setting

Description	Value (decimal)	Meaning
ICU supply voltage min	128	14VDC
ICU supply voltage max	255	28VDC
Fan current min	0	0mA
Fan current max	255	180mA
Bias T supply voltage min	128	14VDC
Bias T supply voltage max	255	28VDC
Tx bias T current min	255	0mA
Tx bias T current max	0	500mA
Rx bias T current min	255	0mA
Rx bias T current max	0	500mA

2.8.4.4.3. Setting the BEAMER® Shut-Down Conditions

BEAMER® shut-down conditions can be modified using command 'save shut down conditions' (code 135). Currently, three parameters control the BEAMER® shut-down criteria: BEAMER® temperature, Tx current and linearizer performance. The factory setting for these parameters is ON for each one (i.e., the BEAMER® will shut down for any violation regarding these parameters).

Shut-down conditions for the BEAMER® modules are very important parameters used for protecting the BEAMER® hardware from over temperature and electrical short as well as eliminating transmitter spectrum distortion due to linearizer failure. The BEAMER® module software has built-in recovery features following shut-down.

> *Caution: Do not change the conditions for these settings, unless specifically advised by Celletra engineering.*

2.8.4.4.4. Defining System Failure Conditions

Command 'save alarm conditions' (code 26) defines the conditions for failures. These conditions can be set to the customer's preferences. The following table describes the command conditions and the suggested failure conditions.

Table 6: Failure conditions

Failure Description	Recommended Value
Temperature out of range	01 minor
Input power	01 minor
Output power out of range	01 minor
Tx attenuator	00 no condition
Main Rx attenuator	00 no condition
Div Rx attenuator	00 no condition

Failure Description	Recommended Value
BEAMER® supply voltage	01 minor
Tx current	02 major
Main Rx current	01 minor
Div Rx current	01 minor
Return power	01 minor
Power amplifier	02 major
Linearizer	02 major
Bias T voltage	02-major
ICU voltage	02-major
Rx bias T current	01- minor
Tx bias T current	02-major
BEAMER® CTRLR	02-minor
ICU CTRLR	01-minor
Fan current	00-no condition

2.8.4.5. Changing the Real Time Clock

The real time clock correct timing is important for log files time stamp. To change the RTC timing use 'Save real time clock' command (code 38). The following example sets the time to 10:00:00AM, at 31.03.2001:

Code 38 (save real time clock), ICU address, 1FH, 03, 0BH, 0AH, 00, 00

Note: Years are counted since 1990, thus 2001 is represented as 0BH (=11).

2.8.5. Calibrating the Transmit Channel Gain

Before calibrating the transmit channel gain and connecting the BTS transmitter to the BEAMER® -Tx array input, verify that the Tx-ABT is set to minimum gain (maximum attenuation). Instructions for Tx-ABT gain setting can be found in section 2.8.3. This is essential for protecting the BEAMER® from possible overdrive due to high input power from the BTS.

The following diagram can be used as a guideline to determine the gain distribution over the transmit link. The numbers within the shaded circles represent Maximum BEAMER® system expected performance. However, some gain variations might occur. These variations might be due to gain variations with BTS output power, the active Bias-T gain, RF cable loss and BEAMER® -Tx gain. It is therefore important that the gain calibration procedure will be performed whenever one of the system components is changed: the BEAMER® array, the RF cable, the active Bias-T or the BTS up-converter output.

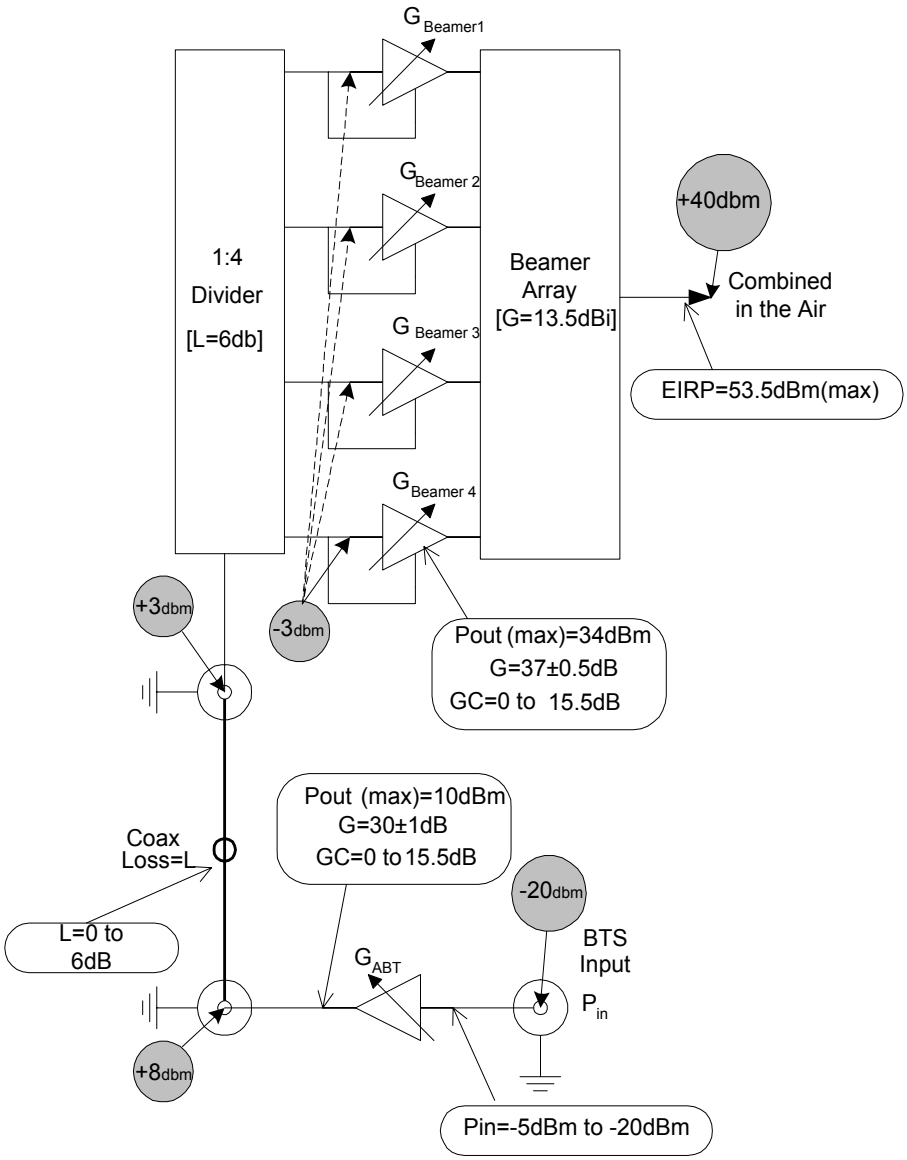

Figure 21: Tx link budget example

2.8.5.1. Estimating the Required Tx-ABT Gain

The purpose of this procedure is to verify that the BEAMER® system available gain is sufficient to cover the expected RF losses, before starting the actual Tx calibration.

Measure or estimate, according to the RF cable's vendor specifications, the RF losses over the Tx RF cable. Typical loss for ½" cable is 0.11db/meter or about 5.5dB/50meters. ($L_{TX\text{-}CABLE}$)

Measure or estimate the output power from the BTS up-converter at full capacity (P_{BTS})

Using G BEAMER® (min)=36dB, estimate the needed output from the Tx-ABT:

Pout(ABT)=33dBm-G BEAMER® +6dB+0.5dB+ LTX-CABLE

Verify that Pout(ABT)<+10dBm. If the computed Pout(ABT) is higher than the required limit, you should use lower loss RF cable.

Estimate the Tx-ABT gain to achieve the required ABT output:

G_{ABT} = Pout(ABT)-P_{BTS}

The maximum available G_{ABT} is 30dB, reducible to 14.5dB in steps of 0.5dB.

2.8.5.2. Setting the Actual Tx-ABT Gain

The following procedure will set the actual ABT-Tx gain to achieve the required Maximum output power from the BEAMER® array (+34dBm per BEAMER® module, +40dBm or 10Watts at the antenna port). Typical application is 1 db less then the max.

1. Using the PC or BTS interface, verify that the Tx ABT gain is set to minimum.

2. Connect the BTS up-converter output to the Tx-ABT input.

3. Set the BTS up-converter to full capacity, single carrier simulated CDMA output (if this feature is not available from the BTS, use a commercial CDMA source, such as HP4431B - ESGD, to generate the required signal. *Note that the* BEAMER® *power measurements are calibrated for CDMA RF signals only*).

4. Read the BEAMER® power indications for each BEAMER® module connected to the array. Issuing the command read BEAMER® indications (code 132), with the appropriate ICU and BEAMER® addresses does this. Output power indication is given within a range of 0-14dB above +20dBm.

5. Repeat for all four BEAMER® -Tx modules integrated into the array. Compute the average output power:

$$P_{AV} = \tfrac{1}{4}\sum_{i=1}^{4} P_i$$

Where P_i is the measure output power from BEAMER® -Tx #i, as indicated by read BEAMER® indications command.

6. Watch for variation between the P_i readings. The differences between the BEAMER® -Tx measured output power, for output power in the range of 26dBm<P_i<34dBm should not differ in more than ±2dB.

7. If P_{av} is less than 24dBm, increase the ABT-Tx gain by 5dB. Otherwise, increase the Tx-ABT gain by 2dB.

8. Repeat steps 4 to 8 until P_{av}~31dBm

9. Increase the Tx-ABT gain in 0.5dB steps until P_{av}=34dBm±0.5dB (If the absolute Max. Power is required). Verify, at this position, that between units variation of BEAMER® -Tx reading is less than ±2dB.

10. Record the calibrated Tx-ABT setting and the BEAMER® -Tx readings in the BEAMER® system installation record sheet.

2.8.6. Calibrating the Receive Channel Gain

The Pol. BEAMER® Rx array gain distribution is illustrated in the following figure. It is assumed that the RF cable loss is 6dB. The shaded circles represent the received system noise level, at maximum available gain and at 1.25MHz bandwidth.

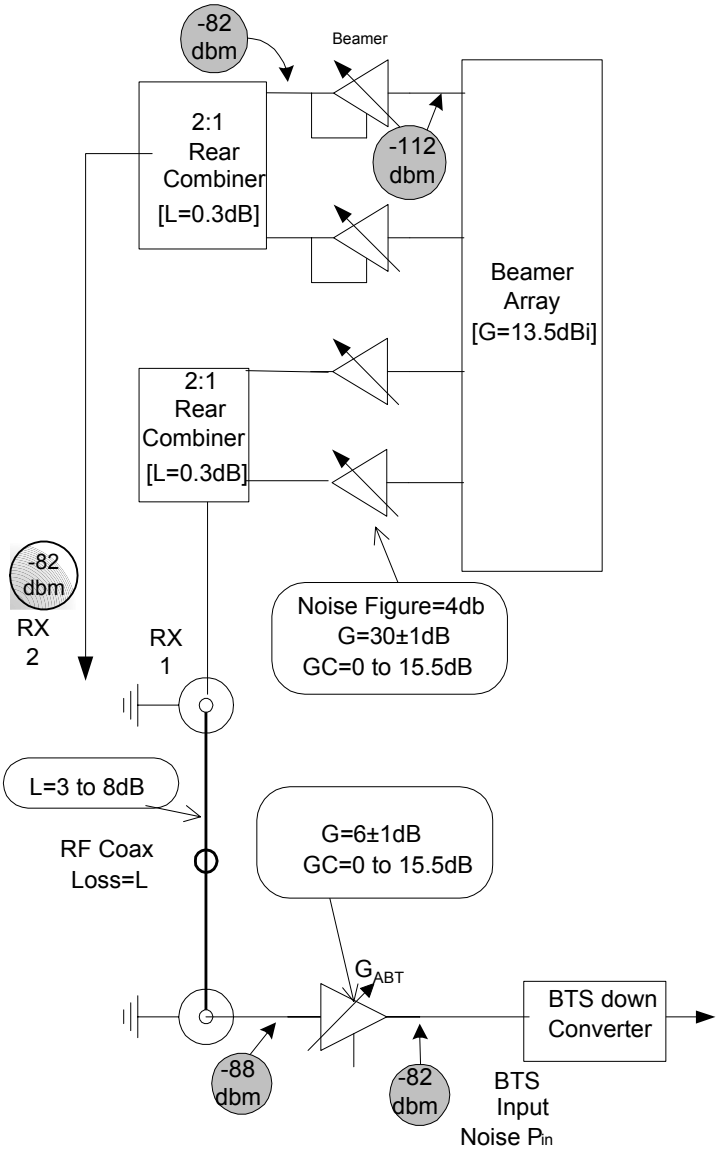

Figure 22: Rx channel gain distribution example

The main factors to consider, when calibrating the Rx channels are as follows:

The total system gain should be high enough to assure that the system input noise level will be driven beyond the down-converter output AGC nominal bias point, when the BEAMER® plus BTS down converter gain is at the maximum available gain.

The total BEAMER® system gain should not be too high, to avoid excessive reduction of the system IIP3 thus increasing the system susceptibility to interference. As a rule of thumb, an excess gain of 6-10dB beyond the minimum required gain from rule 1 is the maximum required gain for rule 2.

For efficient diversity operation, even at relatively low signal to noise ratio, the two Rx channels gains should be balanced to ±2dB.

The BEAMER® -Rx programming property offers the system integrator the tool for calibrating the system gain, in full accordance with the above rules.

The proper trade-off between these rules should be found. As an example, if the two Rx channel are very much unbalanced an excessive gain increase might be required at one channel, causing possible interference susceptibility on that channel.

Since it is impossible to accurately calibrate the BEAMER® system reverse link gain without removing the antenna element (thus, effectively disassembling the array) the gain balance will be calibrated using an external low power CW transmitter located at short range (50-100meters) away from the array, transmitting at vertical polarization.

2.8.6.1. Estimating the Required Rx-ABT and BEAMER® Rx Gain

The purpose of this procedure is to verify that the BEAMER® system available gain is sufficient to cover the expected RF losses, before starting the actual Rx calibration.

1. Measure or estimate, according to the RF cable's vendor specifications, the RF losses over the Rx RF cable. Typical loss for ½" cable is 0.11db/meter or about 5.5dB/50meters. ($L_{RX\text{-}CABLE}$)

2. Measure or estimate the minimum input power to the BTS down-converter required for the AGC bias point at maximum BTS down-converter gain (P_{BTS})

3. Using $G_{BEAMER®}$ =25dB, estimate the needed gain from the Rx-ABT:

$$G(Rx\text{-}ABT)=P_{BTS}-(-120dBm+G_{BEAMER®}-0.5dB-L_{RX\text{-}CABLE})$$

4. If the estimated G(Rx-ABT) is higher than 6dB, increase $G_{BEAMER®}$ to get (Rx-ABT)~6dB. The maximum available BEAMER® -Rx gain is 30dB. If this limit is reached, you should use a lower loss RF cable.

5.If the estimated G(Rx-ABT) is lower than -3dB, reduce the Rx- BEAMER® gain and increase the Rx-ABT gain. To avoid affecting the system noise figure, do not reduce the Rx- BEAMER® gain below 20dB.

6. Record the required G(Rx-ABT) and $G_{BEAMER®}$.

2.8.6.2. Calibrating the Actual Reverse Link Gain

Calibrating the Rx channels is straightforward, using the ABT-Rx programming feature. However, testing the actual calibration is not immediate, since, unlike the Tx channel calibration, power level monitoring is not available for the Rx channels.

Rx channel calibration is performed by measuring the received Rx channels RF level, using a reference mobile CDMA transmitter, or by measuring the background noise level for each receiver using the BTS built-in software and hardware level measurements aids. These procedures, although not requiring special test equipment, do require some interaction within the BTS software and hardware. We leave this procedure for the customer's engineering personnel. Celletra will provide the customer the needed technical support for performing the tests.

Note, however, that both the ABT-Rx gain and the BEAMER® -Rx gain are calibrated to ±1dB (a total of ±2dB uncertainty). We can thus guaranty, with good confidence level, that the RF front-end gain is balanced within ±2dB for both Rx channels.

1. Connect the BEAMER® array to the ICU's ABTs, for both Rx channels.

2. Using a PC or the BTS controller software, set the Rx- BEAMER® and both Rx-ABT gain to the computed required gain.

The receivers gain is set. You can perform gain tests, using one of the above-suggested procedures.

2.9. BEAMER® System Sector Array Installation Record

Sector # .....

ICU address.....

ICU ID number ..... (from unit label)

Array Number .....

2.9.1. Installed BEAMER® Modules

Unit#1 ID(from unit label)..... system address

Unit#2 ID (from unit label)..... system address

Unit#3 ID (from unit label)..... system address

Unit#4 ID (from unit label)..... system address

2.9.2. RF Cable Loss

Tx ..... dB

Rx1 ..... dB

Rx2 ..... dB

2.9.3. Tx Channel

BTS output power level ..... dBm (at sector maximum capacity)

Tx-ABT gain..... dB

BEAMER® measured output power:

P1 ..... dBm

P2 ..... dBm

P3 ..... dBm

P4 ..... dBm

Average..... dBm

2.9.4. Rx Channels

Estimated ABT-Rx gain

Rx1..... dB

Rx2..... dB

2.10. Test Procedure for Measuring the Rx Gain Balance

This section describes a way to measure the gain difference between to RF front-end channel. Following the installation of a Pol. BEAMER® array.

The measurement requires test equipment and somewhat involved test set-up, based on mobile RF signal generator connected to an antenna, capable of rotating on the horizontal plane. This test setup is not always available. Moreover, the good balance between the BEAMER® gain blocks, on both the BEAMER® -Rx modules and the ICU, guarantees the gain balance.

However, we suggest to perform this measurement to one or two selected sites, as part of the system validation tests.

1. Place a signal generator with an omni-directional antenna, at a distance of 50-100meters from the array. The antenna should be mounted as a vertically polarized antenna.
2. Tune the signal generator output to Rx Center frequency, output power of 0dBm.
3. Connect a spectrum analyzer to the ICU's Rx-ABT output for Rx1 channel. Tune the spectrum analyzer to Rx Center frequency, zero span, RBW=30kHz, reference level =-20dBm@5dB/div, sweep time = 10Seconds.
4. While constantly moving the transmitting antenna on the horizontal plane, without altering the polarization direction, watch the spectrum analyzer display of the received CW carrier. (you can use a rotating plate or move the antenna manually).The spectrum analyzer display will show a varying level line, around ~-30dBm. Estimate the average level of this line, Pr1, to ±1dBm.

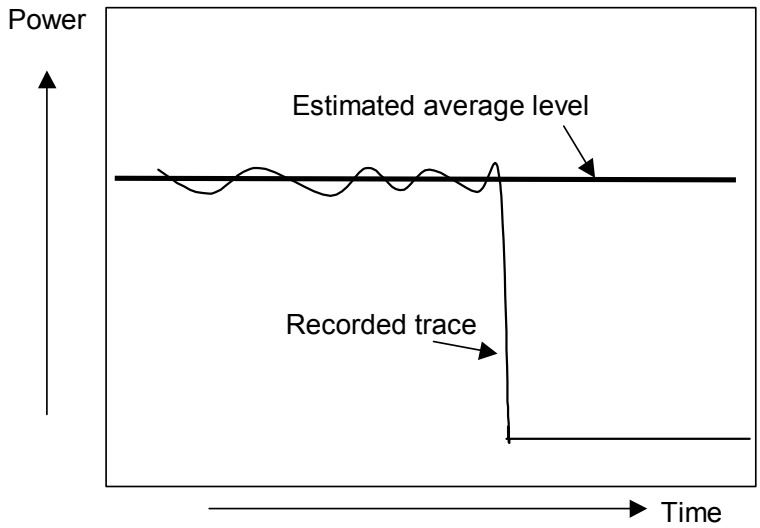

Figure 23:Measuring the received

1. Repeat for the other Rx-ABT output, for Rx2 receiver, to get Pr2.
2. The readings for Pr1 and Pr2 should match to ±2dB. You can compensate up to ±4dB by fine-tuning the Rx-ABT gain (available gain step is 0.5dB). It is recommended to increase the gain of one Rx-ABT and to reduce the gain of the other, to minimize the effects of possible over- or under-gain conditions. If Pr1 and Pr2 differ within more than ±5dB, it might indicate an installation problem.

2.11. Smart-Terminal Program Description

This program can be used for communication protocol debugging and testing. It is written in Visual Basic for Windows 95 environment and provides basic control on the ICU and BEAMER® parameters, via the RS485 or RS232 serial communication ports.

The program is primarily oriented for engineering debugging and it is not intended to be used as a commercial interface to the ICU. For this purpose, Celletra has developed the more powerful and user friendly BSM program. However this program is not needed for ICU operation, since it is operated with the MBTS controller supervision.

Note that when interfacing the ICU with RS485 interface to a PC, an appropriate hardware converter should be used for the RS485.

In the following description the following notations are used:

- Bold italic characters, i.e., ***System Setup*** - represent drop down menu.
- Bold characters, i.e., **Send** - represent a 'radio' button or on screen displayed data.
- Quoted italic characters, i.e., *'Commands'* - represent a directory or a file name.

2.11.1. Program Installation

The program is installed with the setup.exe file. The program was tested on Windows 95/98 machine, environment. Other known problem is that the file "*TDoubleRangeValidator.ocx*" will not install correctly. This file should be installed in Windows/System directory. It was found that sometimes it will not be installed or the installed file will not be recognized. If this happens, it is recommended to install the file manually, using the attached updated "*TDoubleRangeValidator.ocx*" file. Just copy the file to the Windows/System directory.

The program will be installed under '*C:/Program Files/Smart Terminal2*'. After the installation, copy the attached 'Commands' directory to '*C:/Program Files/Smart Terminal2/Commands*' directory. This directory contains the command scripts for the ICU to PC communication protocol (see below).

Following the installation, a shortcut named 'Smart terminal2' will be created in the Start/Programs menu.

2.11.2. Running the Program

Run the program by clicking the 'Smart terminal2' shortcut on the start/programs menu. The program has one drop-down menu item available: *System Setup*. Pressing the system-setup tab will reveal three menu items: *Com Port, Get File* and *Save File*.

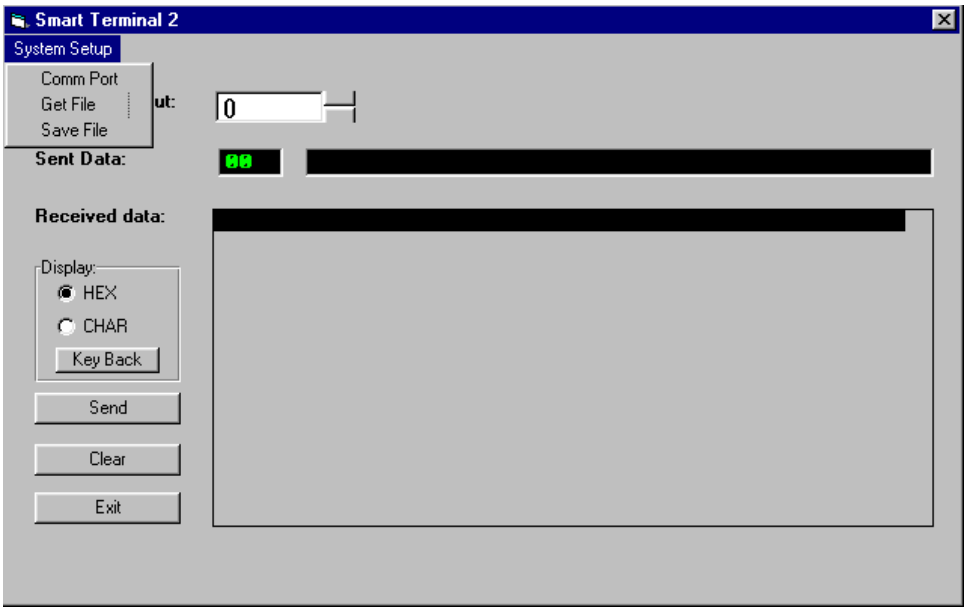

Figure 24: Smart Terminal 2 window

Com port - when pressing this tab the program displays the available serial ports. Select the one that is connected via the RS232 interface to the ICU.

Get file - the program is loading commands to the ICU, written in the format as defined by the PC to ICU protocol. These commands are stored in directory '*Commands*' within the 'smart-terminal2' directory. The commands are in ASCII format, one byte per line, each byte followed by carriage return. A command file has *.bcd extension. These files can be edited and modified, according to the PC to ICU protocol. When pressing the get-file tab, the smart terminal program will search the 'commands' directory and a list of the available commands will appear. The listing contains the Windows file name, as it appears in the '*Commands*' directory. It is thus suggested to name the files with an appropriate name, making it easier to search for the needed command. A sample collection of commands is attached to this package.

Save file - a command, entered either manually or as a script from the Commands scripts can be saved into the Commands scripts directory using this tab.

The program screen also shows two windows (green characters on black background). The upper window has one line. It contains the data that will be sent to the ICU (Sent Data). Every time the Send button is pressed the data from this line is sent via the serial port to the ICU. The lower window is the I/O response window (Received Data). It shows all the RS232 (or RS485) communication between the PC and the ICU. Note that this window scrolls down (the most recent data is always at the top of the window).

The displayed format can be changed from Hex to CHAR format. However, the input format should always be decimal.

The Clear button clears the contents of the Received Data window.

The Exit button closes the program. Note that the program window cannot be minimized.

2.11.3. Entering and Editing a Command

A command may be entered manually, entering byte value (0 to 255) decimal number at the Sent Data Input window, followed by pressing the Send tab. The same command can also be sent with a script file, using the *Get File* tab.

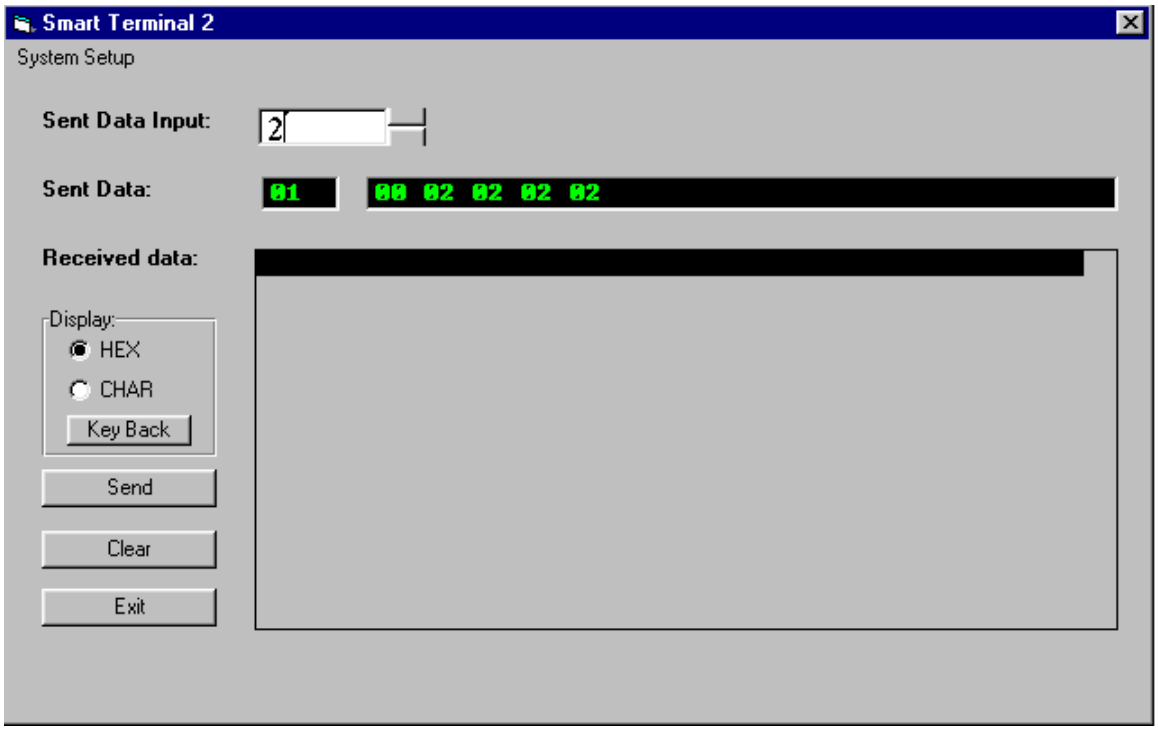

Figure 25: Entering and editing a command

2.11.3.1. Editing a Command

To edit a command, enter a value at the Sent Data Input window, followed by Send. If you make a mistake or wish to correct an existing entry, use the Key Back to clear the entry, byte by byte, until you have reached the wanted result.

Note that every time Send is pressed, the data at the Sent Data window will be sent to the ICU. This does not affect the ICU performance - some of the incomplete commands will be ignored, some will be executed - however, the last complete command will do the required job.

2.11.3.2. Entering a Script Command

When pressing the *Get File* menu, the programs look for *.bcd files at *./Commands* directory. These files should be stored line by line, in Hex format. The program will display the available scripts at the *Commands* directory. Select the script name you wish to send, than press OK.

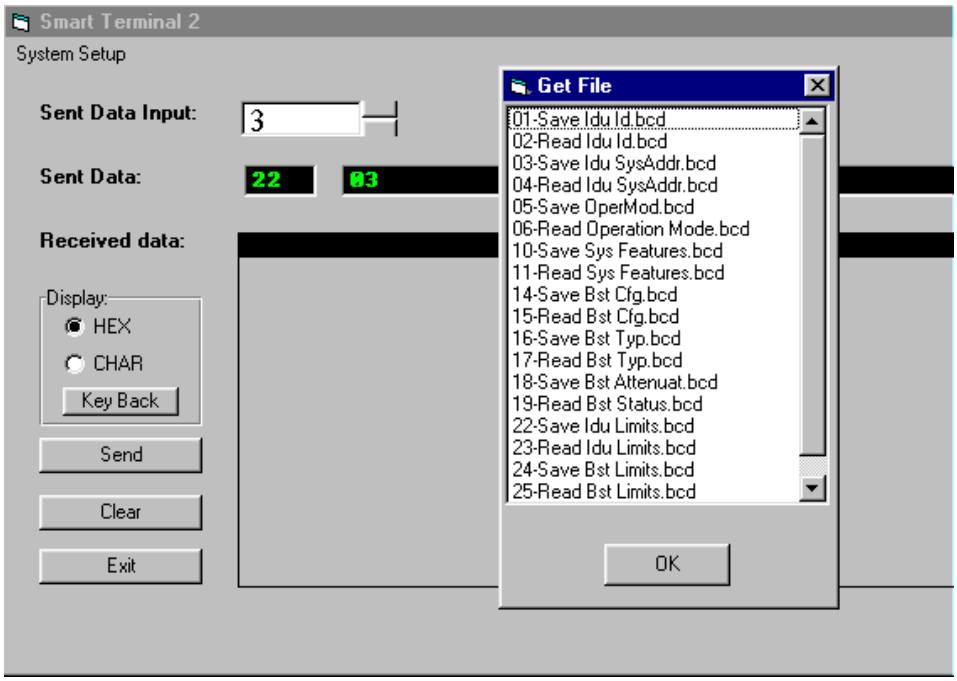

Figure 26: Using scripts

The script data will appear at the Sent Data window (command code followed by command data). The program will not test for correctness of the script data. It assumes that the script is legal, and the data is in Hex format.

3. BSM (BEAMER® SYSTEM MANAGER) PROGRAM

3.1. Functions

The BSM program enables monitoring and control of the BEAMER® units form a local or remote PC based host computer.

Its main functions are:

- Status report for each Array
- Status report for each BEAMER®
- Control of system capacity and configuration
- Control of each BEAMER®
- Monitoring & Control of the ICU functions and Active Bias-Ts
- Setting the Active Bias-T amplifiers gains for Tx and Rx channels.

3.2. Requirements for Operation

3.2.1. Hardware

A Pentium™ based PC and a serial port on the PC

3.2.2. Software

Window 95/98/NT operating system

3.3. User Interface Description

3.3.1. Main Menu - Active Radiating Module System Manager

The Active Radiating system manager enables:

Display of systems status report such as:

- Site name
- Status of each Array
- Real time date and clock
- Authorized level for changes

Access to the following operating menus and functions:

- System
- Password
- BEAMER® monitoring and control

3.3.2. System Menu List

The SYSTEM menu list provides the functions to set system parameters. It consists of four menus:

Capacity, Configuration, Array Control and Com

3.3.2.1. Capacity Menu

The Capacity menu enables definition of the number of arrays in the system and maximum BEAMER® units per array

3.3.2.2. Configuration Menu

The Configuration menu enables:

- Registration of new BEAMER® units in the system..
- Display the ID number of each BEAMER® unit in the system.
- Definition of the site name.
- Definition of the conditions for failure messages.
- Definition of the shutdown conditions for the Tx amplifiers.
- Definition of status limits for failure messages (displayed by the ICU , the user interface and sent to the AlBEAMER® concentrating unit).

3.3.2.3. Comm Menu

The Comm menu enables selection of an available serial port

3.3.2.4. Array Control

The Array Control menu enables setting the gain for each Bias T in the system.

3.3.2.5. Password Menu List

The Password menu list enables entering the password to apply changes in system configuration.

Four levels of password are available:

1. "Guest" level can only observe indications.
2. "Operator" level can apply changes to System configuration setting menu and BEAMER® setting menu in addition to "Guest" abilities.
3. "Supervisor" level can apply changes to the system settings, such as Capacity/Failure conditions and Limit/Shutdown conditions, in addition to the "Operator" abilities.
4. "Administrator" can change the passwords in addition to "Supervisor" abilities.

3.4. Status Reports

3.4.1. Report by Visual Monitoring LEDs

Monitoring LEDs are located on the front panel of the ICU. Twelve green LEDs indicate that all twelve arrays are functioning properly. Sixteen green LEDs indicate that all sixteen BEAMER® s are functioning properly A fatal failure of an array or BEAMER® is indicated by a change in LED color to Red. This same indication will be transferred to both the PC (or modem) and a dry contact. The definition of a fatal array failure is software driven.

2 LEDs shows the Tx, Rx of serial port communications.

One LED shows the ICU condition.

One LED shows voltage condition.

3.4.2. Report by Sending Messages (Monitoring)

Either a PC or remote- connected PC can be used for Monitoring and Control of the BEAMER® Array System. The communication standard between the ICU and the local or remote PC is by a standard RS-232/RS485 bus at a baud rate of 9.6 Kbps.

3.4.3. BEAMER® Array System Control

Either a PC or remote- connected PC can be used for Control each individual BEAMER® and each of the BEAMER® System. Local or remote PC can obtain control functions only

3.5. BSM S/W

The BSM Software enables system configuration and monitoring functionality of each unit in the system.

Operation of the software will be described in the following paragraphs.

3.5.1. S/W Installation

The software installation is from diskette that supplied by Celletra .

- Put disk no.1 in the floppy drive and run "Setup".
- Follow the instructions on the screen until completion of installation.

3.5.2. S/W Operation

From the "Program files" in the Windows operating system select the BEAMER® icon and operate the software.

Follow the next steps in order to establish a correct system installation.

3.6. BSM Main Screen

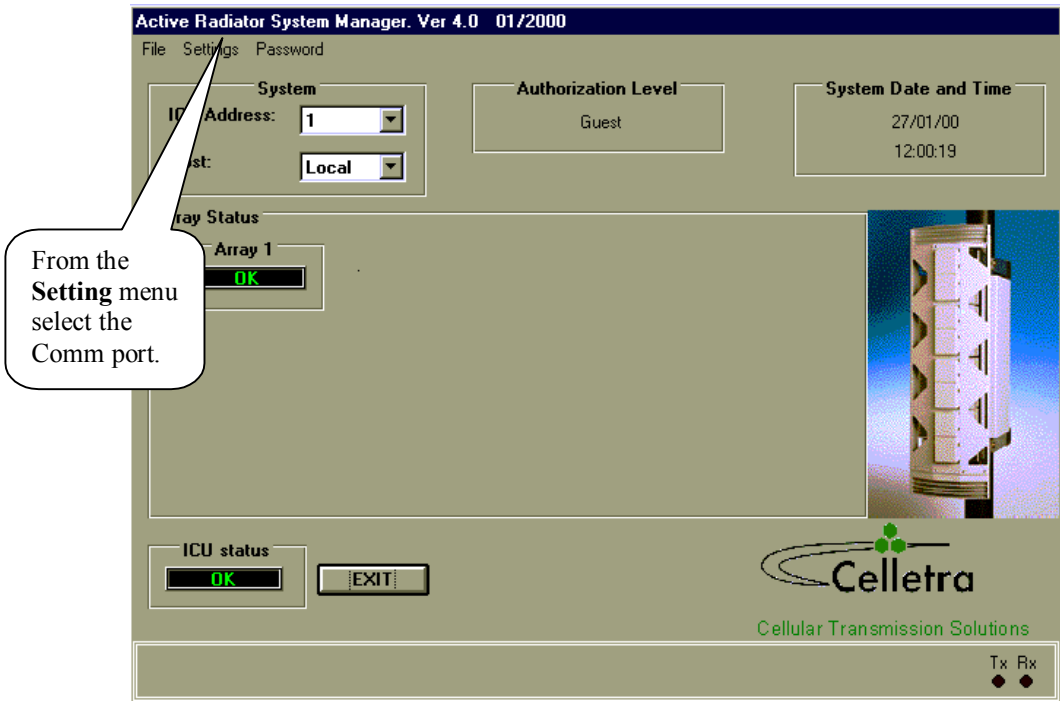

3.7. Comm Port Selection

Connect RS-232 or RS-485 cable to the ICU.

Run the cable to a Comm port on your PC.

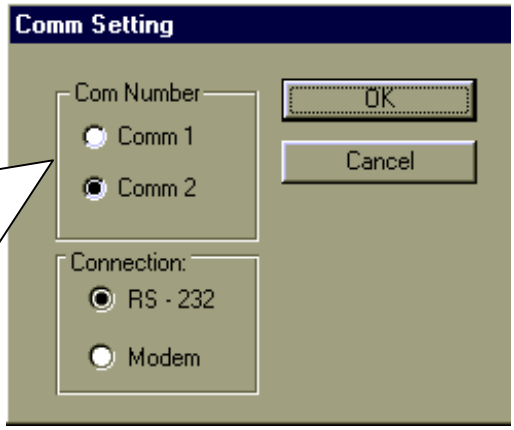

3.8. Password Entering

In order to create or modify a configuration, you will need "Administrator" password level.

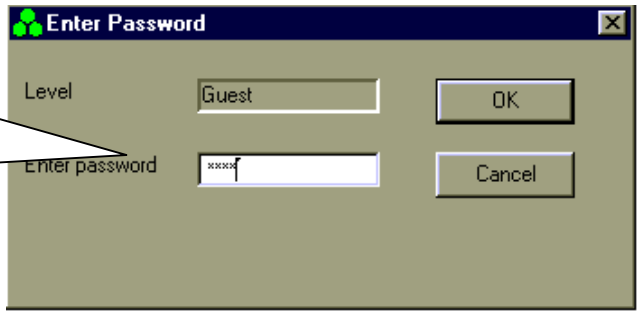

3.9. Host Selection

From the **Setting** menu select **Main Host** and then select either **Local** or **Remote Host**.

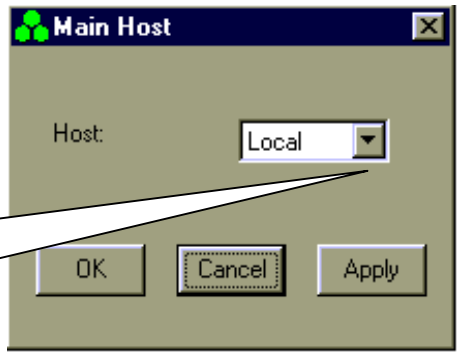

3.10. Installation of ICU in System

Operate ICU 24VDC Power Supply .

Enter the **ICU ID** opposite any one of the **ICU addresses**.

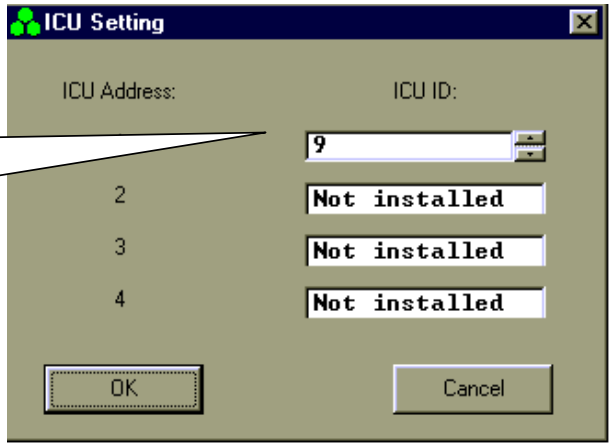

3.11. Failure Conditions Selection

Select **Major** or **Minor Fail** according to operator application

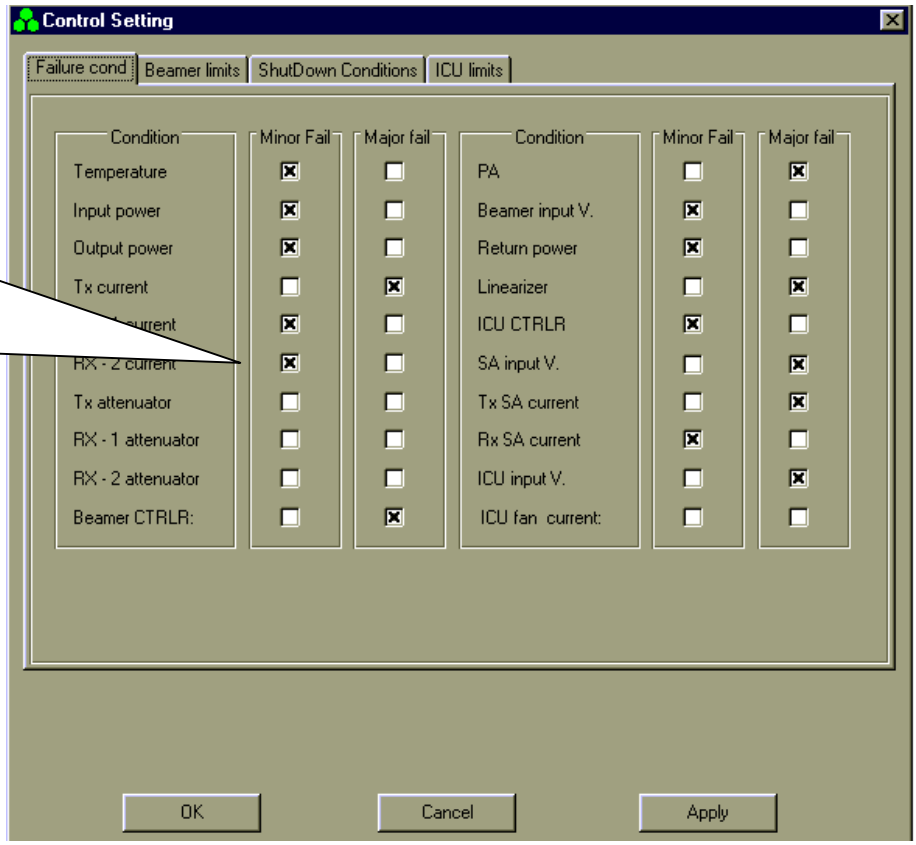

3.12. BEAMER® Limits Definition

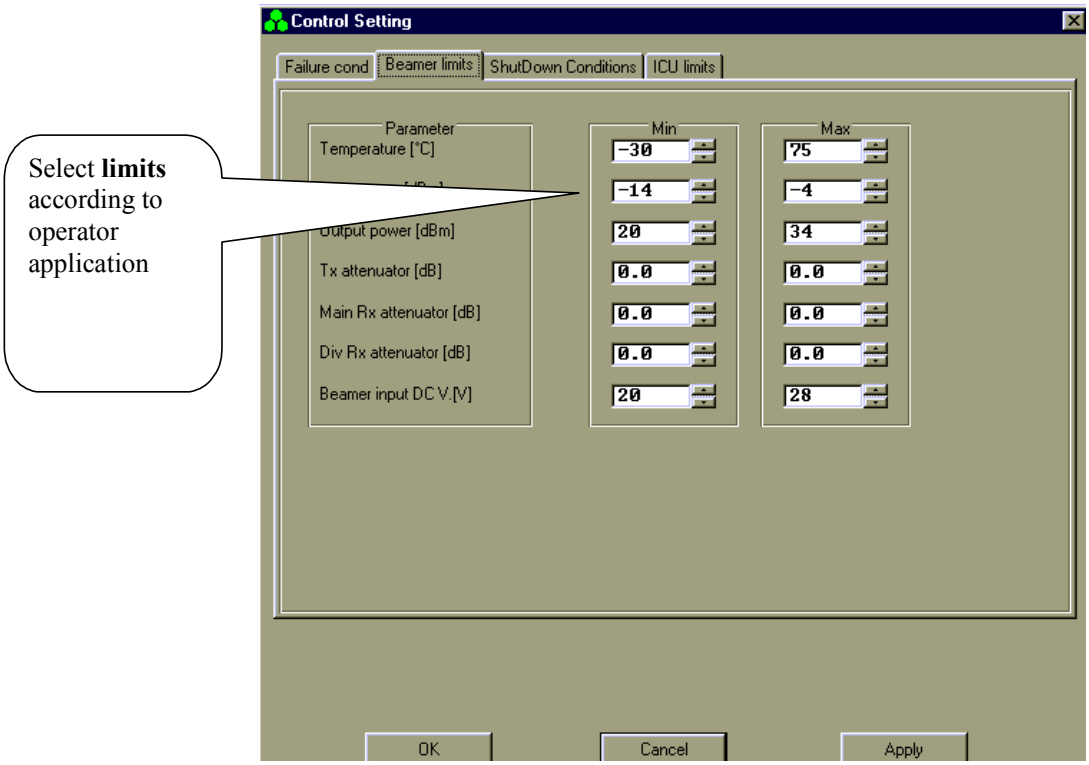

3.13. Shut Down Conditions Enable/Disable

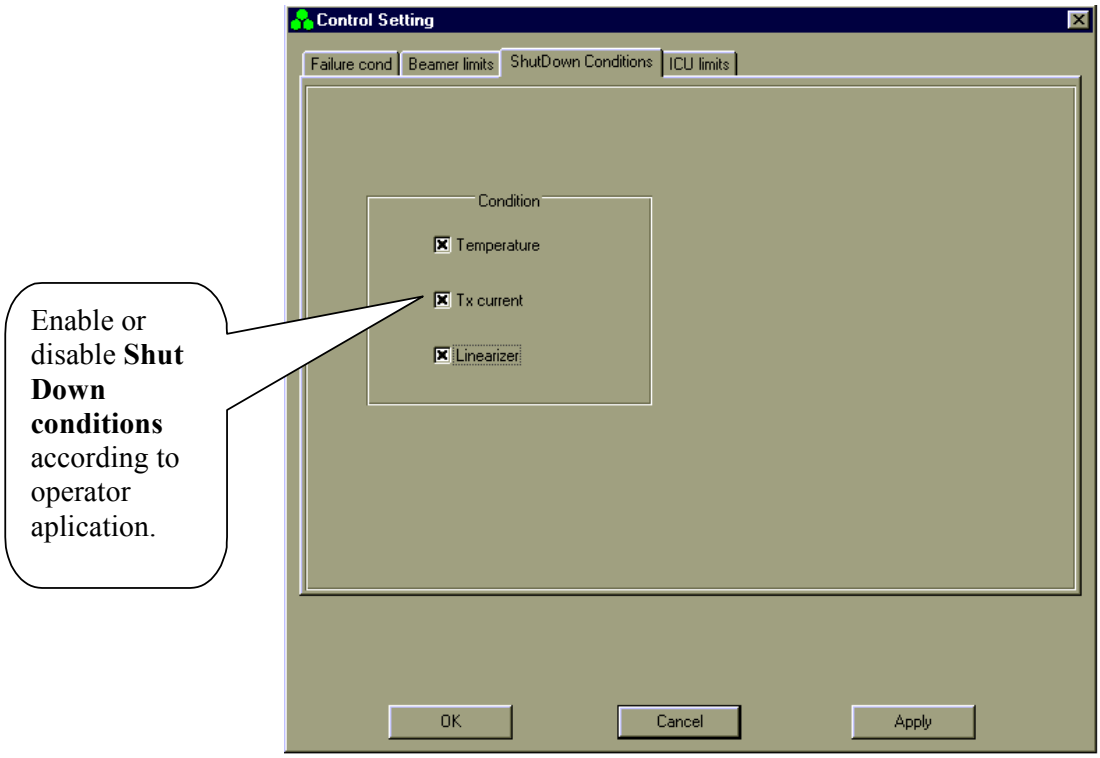

The "Shut Down Conditions" should be saved only after BEAMER® installation paragraph 4.18

3.14. ICU Limits Definition

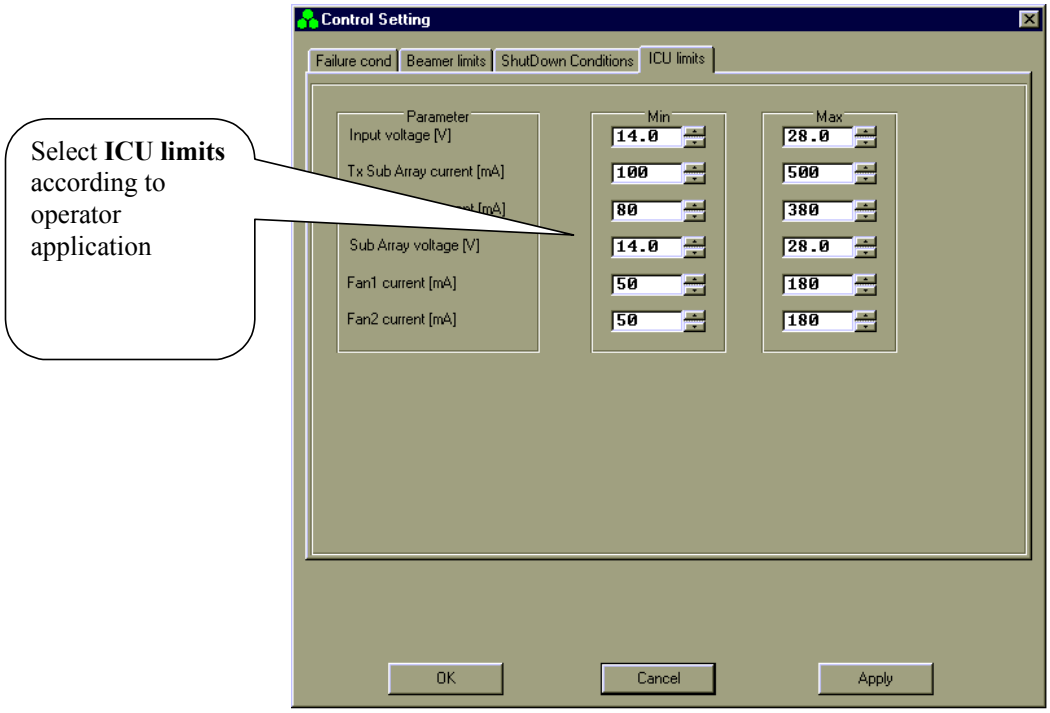

3.15. System Definition

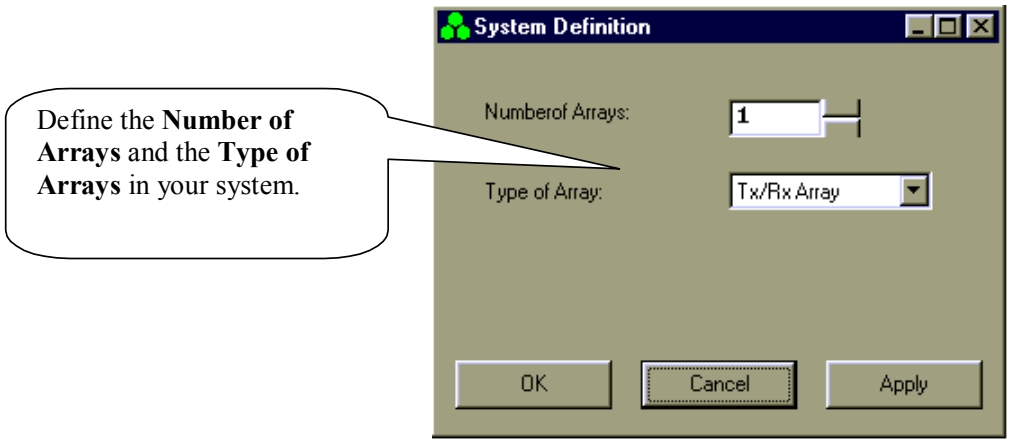

3.16. Sub-Array and BEAMER® Setting

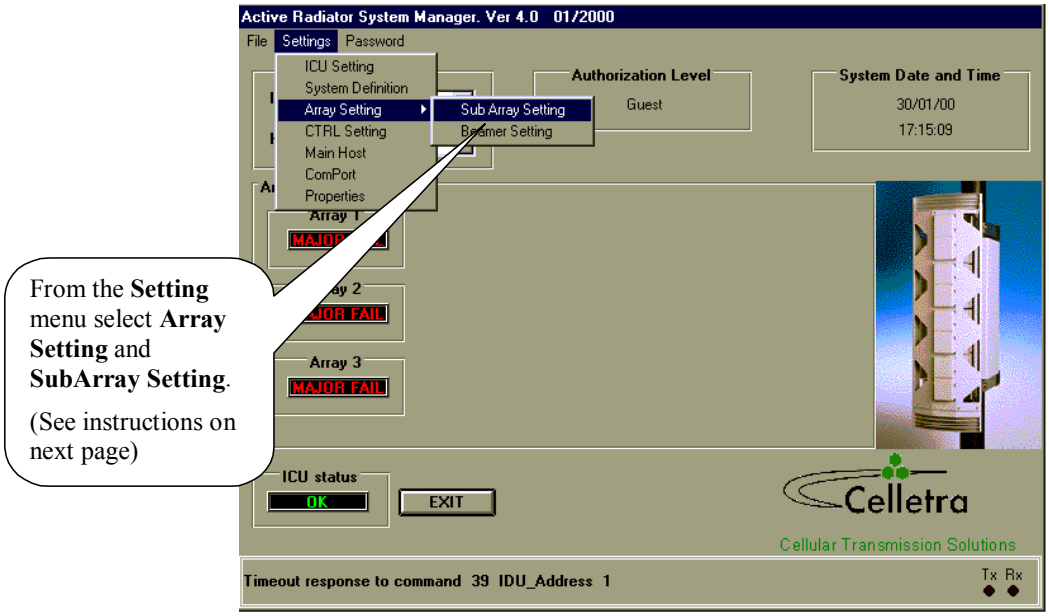

From the **Setting** menu select **Array Setting** and **SubArray Setting**.

(See instructions on next page)

3.17. Sub Array Setting

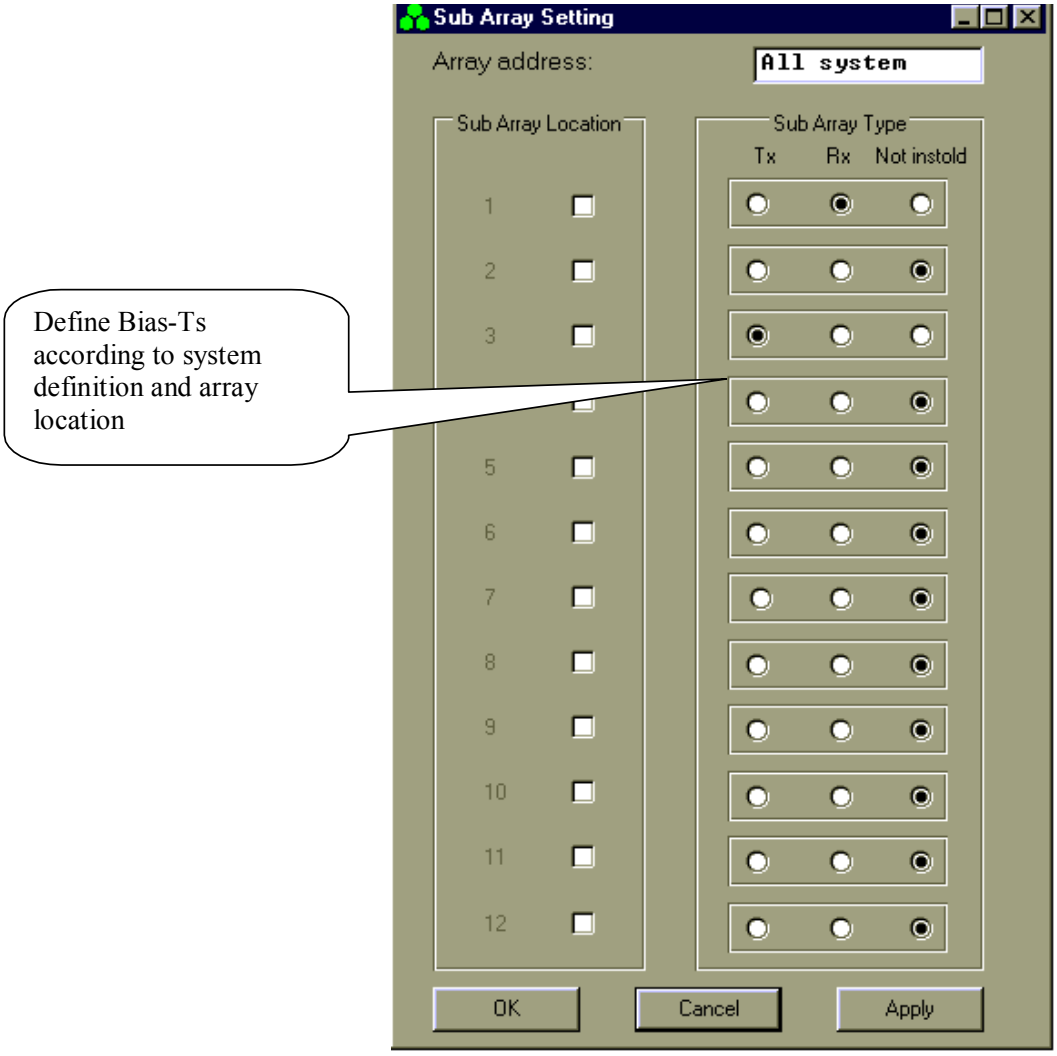

3.18. BEAMER® Installation

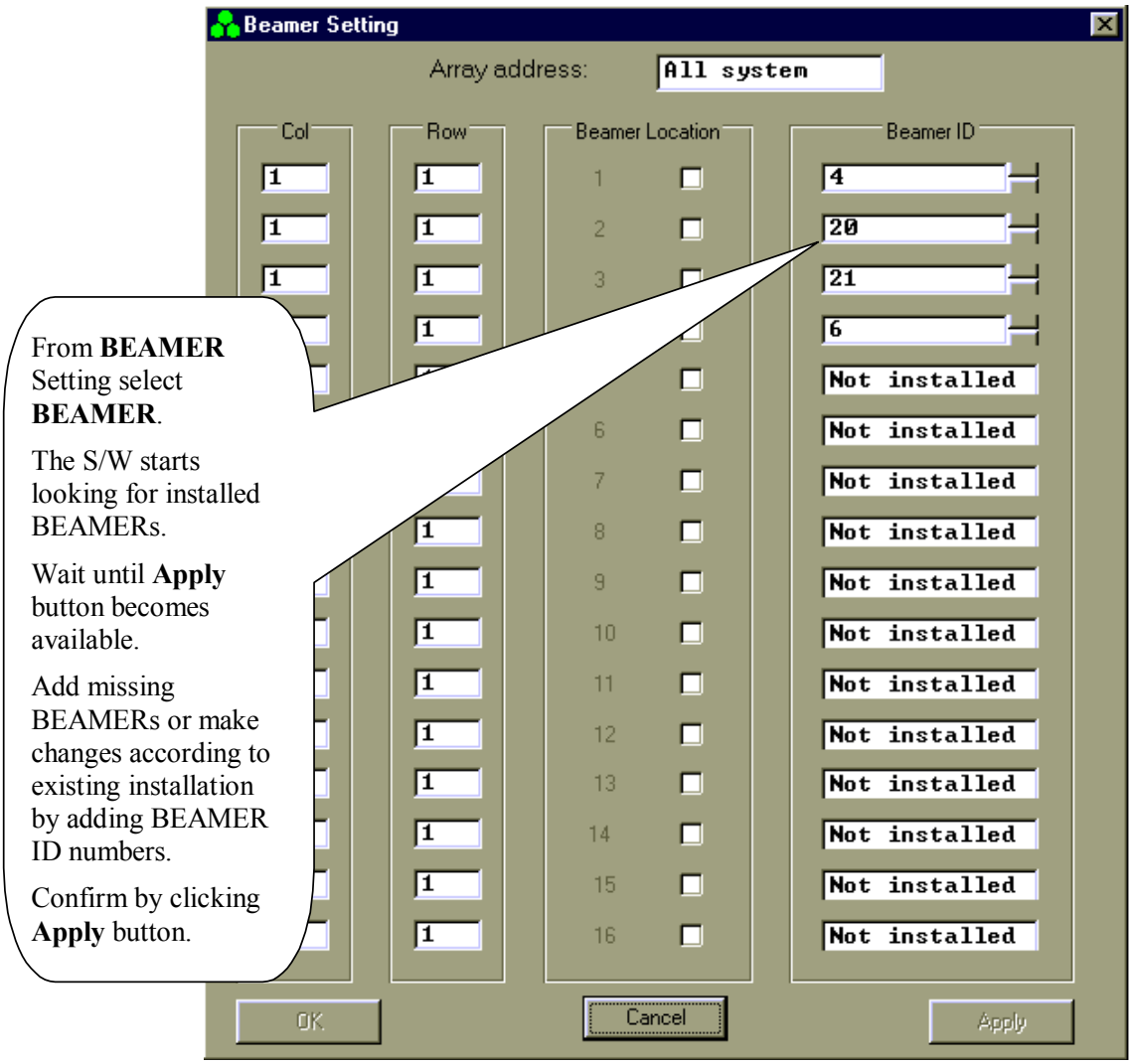

From **BEAMER** Setting select **BEAMER**.

The S/W starts looking for installed BEAMERs.

Wait until **Apply** button becomes available.

Add missing BEAMERs or make changes according to existing installation by adding BEAMER ID numbers.

Confirm by clicking **Apply** button.

3.19. Column and Row Definition

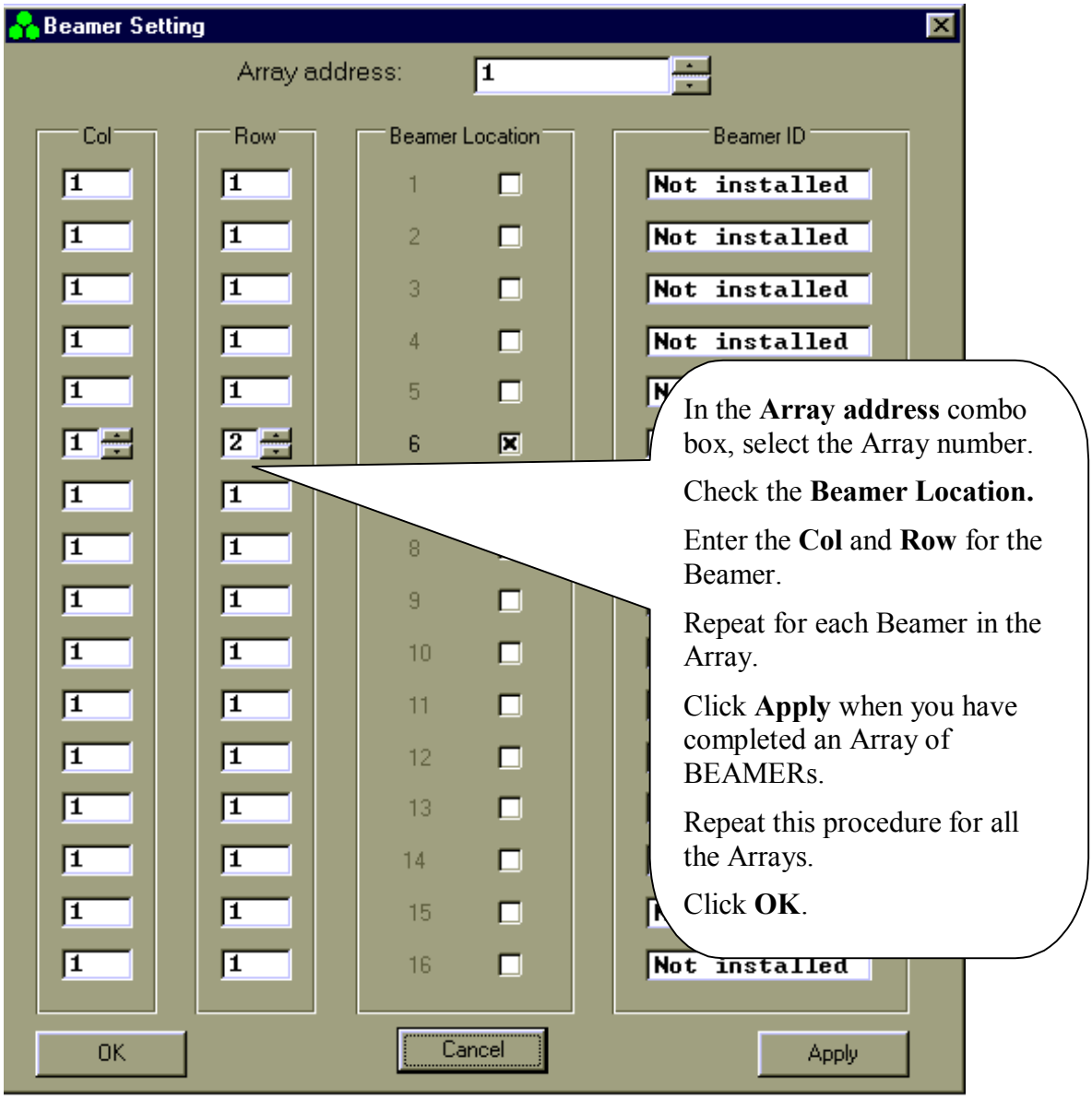

In the **Array address** combo box, select the Array number.

Check the **Beamer Location.**

Enter the **Col** and **Row** for the Beamer.

Repeat for each Beamer in the Array.

Click **Apply** when you have completed an Array of BEAMERs.

Repeat this procedure for all the Arrays.

Click **OK**.

3.20. Sub-Array Status and Attenuator Setting

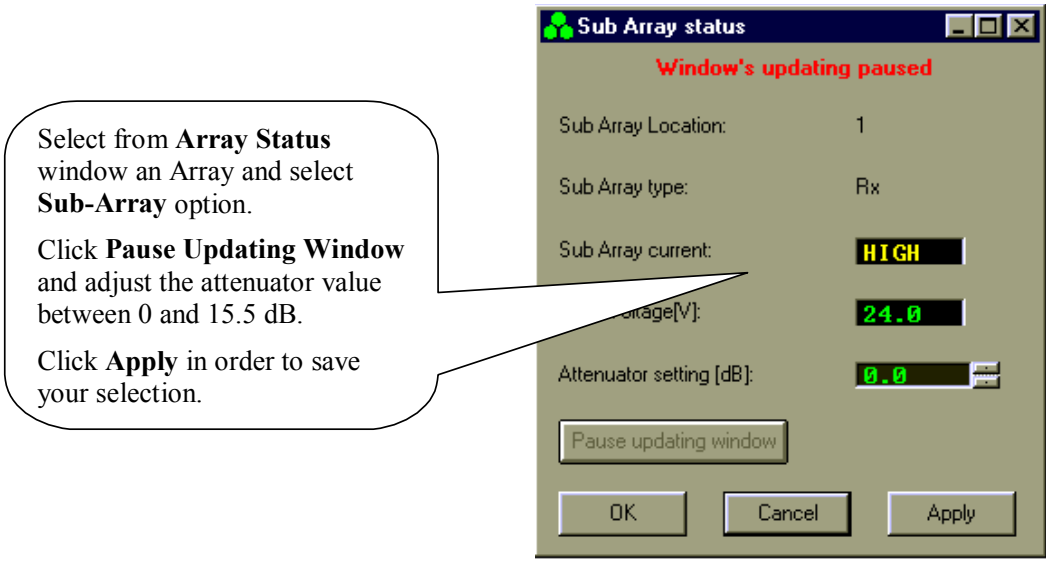

Select from **Array Status** window an Array and select **Sub-Array** option.

Click **Pause Updating Window** and adjust the attenuator value between 0 and 15.5 dB.

Click **Apply** in order to save your selection.

3.21. Control & BEAMER® Setting

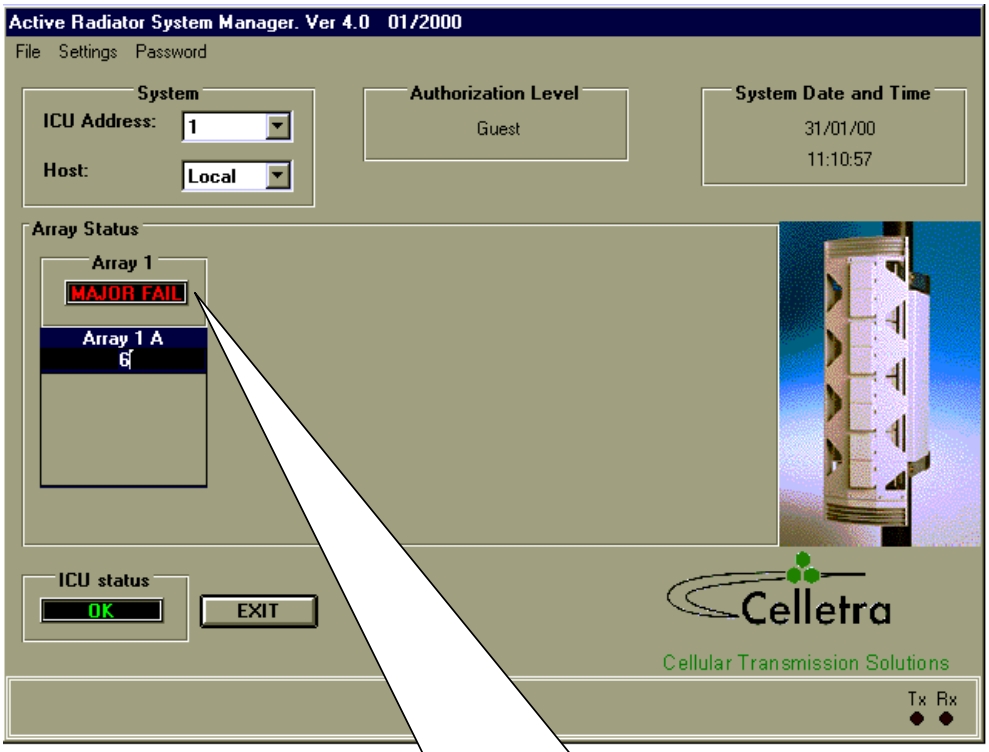

Point cursor at an Array window.

Click to view all BEAMER addresses in selected Array.

Double click to see BEAMER **Control** screen.

3.22. BEAMER® Control

Click **Pause Updating Window** and select attenuator value for Tx and Rx according to your system definition.

Click **Apply** to save your selection.

Click **OK** to return to Main screen.

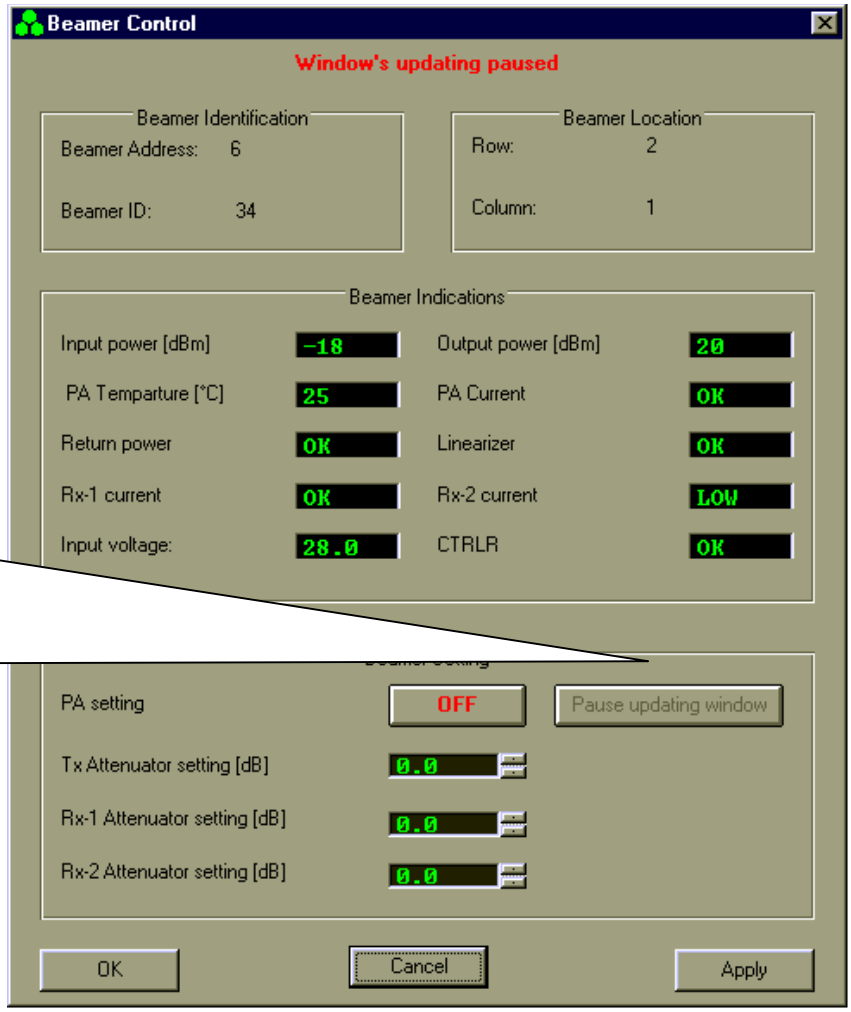

3.23. ICU Status

Click on **ICU** window to see ICU status.

In case of a failure, double click on it to display details

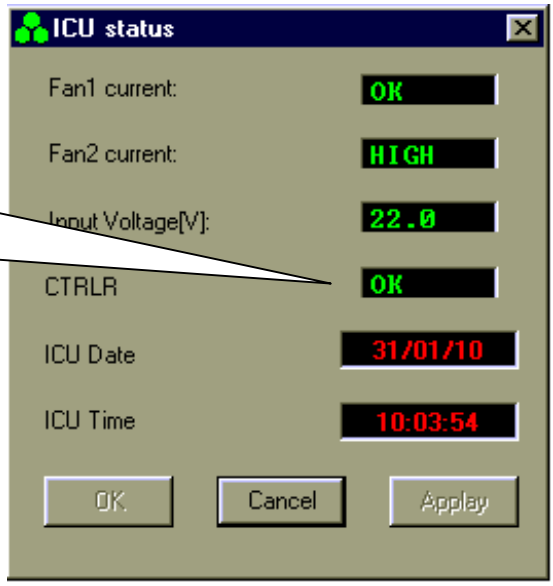

3.24. ICU CTRLR Status

Double click on the CTRLR window to view this box, which shows the CTRLR parameters in detail.

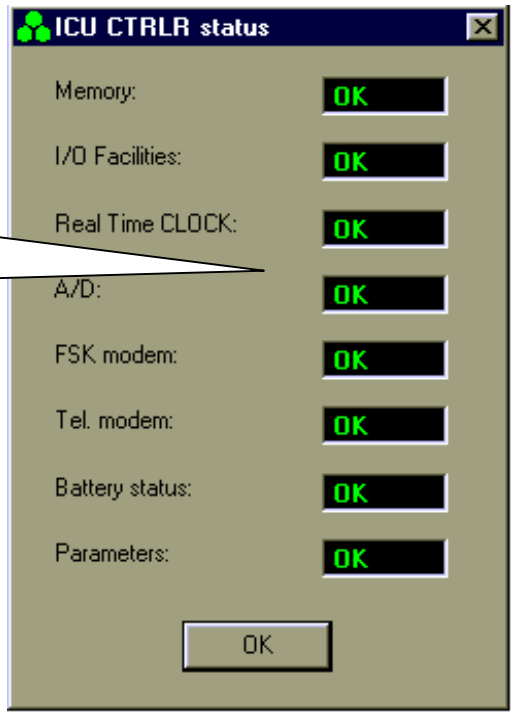

3.25. ICU Properties

From **Setting** you can select **ICU Properties** to view the SW versions of the ICU CTRLR card

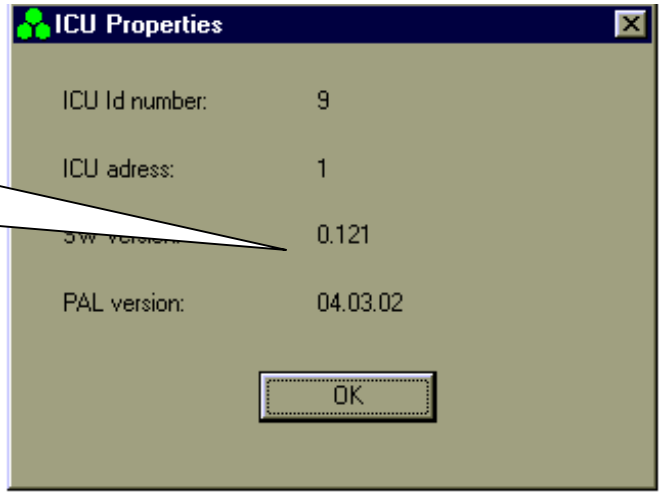

4. SOFTWARE DOWNLOAD GUIDE

4.1. Introduction

This chapter is a guide to loading program files to the ICU and BEAMER® via their Monitoring and Control communication channels. This enables program upgrades in the field without dismantling the equipment for that purpose.

The program loading is done from a PC with a using the *CELLETRA SOFTWARE DOWNLOADING SYSTEM* program, which is supplied by CELLETRA.

This chapter describes the loading process to the ICU and the BEAMER® using the *CELLETRA SOFTWARE DOWNLOADING SYSTEM.*

4.2. Overview

4.2.1. Downloading Software to the ICU

In the software download process a new application program file is loaded to the ICU via the serial communication channel and saved to the FLASH memory.

4.2.1.1. ICU Memory Configuration

The ICU controller includes two types of memories a FLASH memory and a RAM. The FLASH memory includes the configuration parameters of the ICU (such as ID number, number of arrays, failure conditions etc.) and the application program, which enables all the features of the ICU and which is upgradable.

The RAM is used for logging events into the log file during regular operation of the ICU, and for receiving the new application program for the ICU during the download process. A third memory is

located in the CPU component and includes the basic I/O program of the controller. This program enables operation of the basic functions of the controller (such as serial communication and application program loading) and cannot be modified. The memory size allocated for the application is 64 Kbytes. Programming a new application program into the FLASH memory does not affect the ICU configuration parameters.

4.2.1.2. ICU Download Operation Mode

Loading a program file to the ICU is enabled while the ICU operates in Download mode. The operation mode of the ICU is changed by a command through the serial communication channel. When the ICU operates in Download mode, no operational function is performed. (That means that it does not provide monitoring and control of the BEAMER® s). The baud rate of the serial port increases to 56 Kbaud. That enables faster transmission of data packets to the ICU during the download process. The ICU returns to operational mode (Auto) at the end of the loading process or if there was no data transmission from the PC within a predefined time period .

4.2.1.3. File Transmission From PC to ICU

4.2.1.3.1. File Transmission

The program file is a HEX type file and the data is ASCII format. While loading the file to the ICU the PC sends the file content line by line. The ICU reports TO the PC about reception quality. If errors were detected the transmission will be stopped and an error message will be displayed. The PC then restarts the transmission. The program is contained in files of 64 Kbytes. That is, if the program size is greater than 64 Kbytes it will be packed in two files that are distinguished by their names.

4.2.1.3.2. File Name Format

The file name has the following format: IDUxxTVVV.Hyy

IDU	ICU application header
Xx	Not relevant for loader
T	Application type (0=Celletra/1=Korea)
VVV	Application version
Hyyy	HEX: The program is packed in one HEX file
	H00 and H01: The program is packed in two HEX files

Example: IDUck0102.h01

IDUck: Software application

0: Celletra versionk

102: Software version number

h01: High package of the hex file

4.2.2. Downloading Software to the BEAMER®

The Software download process enables loading of a new application program file for the BEAMER® host processor and the DSP via the serial communication channel and saving it to the FLASH memory in the BEAMER® .

4.2.2.1. BEAMER® Memory Configuration

The BEAMER® includes two processors a DSP and a HOST. The HOST processor is a general purpose processor that is used for reporting BEAMER® status to the ICU via a FSK channel and for initialization of the DSP.

The BEAMER® controller includes a FLASH memory that contains:

1. The configuration parameters of the BEAMER® (such as ID number, calibration tables etc.). These parameters are not affected during the loading process.
2. The application program that enables all the features of the BEAMER® that can be replaced by a new version.
3. The program and data files of the DSP that can be replaced by a new version.

The FLASH size contains two files of each program (two of HOST application, two program files for the DSP, and two data files for the DSP). The required program files for operation are selected by the user. The memory is arranged by pages (each page includes 128 bytes).

4.2.2.2. File transmission from PC to the BEAMER®

4.2.2.2.1. File Transmission

The new file is transmitted page by page from the PC to the ICU and from the ICU to the BEAMER® . All files to be loaded are text files. The files contain a Header block, which is the properties block, and the software to be loaded. When the load process is enabled, the baud rate of the of the serial port (from PC to the ICU) increases to 56 Kbaud. That enables faster transmission of data packets to the ICU during the download process. The ICU reports the PC about reception quality and if errors were occurred the transmission will be stopped and an error message will be displayed.

The ICU sends the data packets received from the PC to the BEAMER® and the BEAMER® reports the ICU about reception quality. If errors were detected the transmission will be stopped and an error message will be displayed

4.2.2.2.2. File Name Format for HOST

Files will be identified by the following suffix: name.hst

4.2.2.2.3. File Name Format for DSP

Files will be identified by the following suffixes:

- DSP Program file: name.dpm
- DSP Data file: name.ddm

4.3. User Interface for SW Download

4.3.1. Functions

The Software download program enables download program files to the ICU and the BEAMER® from a local PC-based host computer.

Its main functions are:

- Selection of the target for downloading (BEAMER® or ICU)
- Selection of files to be loaded
- Transmission of files from the PC to the selected target (BEAMER® or ICU).
- Monitoring of transmission process

4.3.2. Requirements for Operation

4.3.2.1. Hardware

- Pentium™-based PC
- Free serial port from the PC
- At least 4 Mb free RAM

4.3.2.2. Software

Window 95/98/NT operating system

4.3.3. User Interface Installation

The software is installed from a diskette supplied by Celletra.

1. Put disk no.1 in the floppy drive and run "Setup".
2. Follow the instructions on the screen until completion of installation.

The program will be installed in the "Program files" subdirectory of the “Windows” directory.

4.3.4. User Interface Operation

The program can be operated from the program menu in the start menu. Another option is to create a shortcut for the program from the "Program files" subdirectory in the Windows directory and operate the program by clicking the icon

4.4. User Interface Description

When operating the program the following window will be displayed:

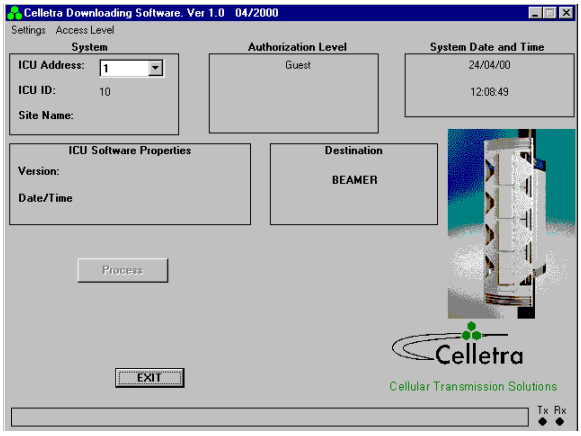

4.4.1. System Field

The System field displays the address of the ICU and its ID number that is controlled by the operated program. In case that the system includes few ICUs the required ICU can be selected by its address from the address bar.

When the program is operated it scans the addresses (1 to 4) and displays the address of the existing ICUs in the System filed . In case that no ICU was connected or the ICU was not configured the address bar will remain blank.

4.4.2. Authorization Field

Authorization field displays the actual authorization level. Two levels of authorization are available:

1. "Guest" level can only observe indications.
2. "Administrator" which enables the application of the loading process and change the passwords in addition to "Supervisor" abilities.

4.4.3. System Date and Time Field

System date and time displays the PC's actual date and time. That time will be registered as one of the properties of the loaded file.

4.4.4. ICU SW Properties Field

ICU SW properties field is enabled when the loading process is enabled. It displays the properties of the program file that exists in the ICU. The ICU property information includes the version number and file loading date and time.

4.4.5. Destination Field

Destination field displays the destination for the file loading – BEAMER® or ICU.

4.4.6. Setting Menu

Setting menu includes the following functions:

- ICU Setting
- Software loading code
- Software remote loader
- Site name
- Destination
- ComPort

4.4.6.1. ICU Setting

If the connected ICU is not configured- meaning that it does not have an address - this function enables defining and saving an address to the ICU. Click on ICU setting to display the following window:

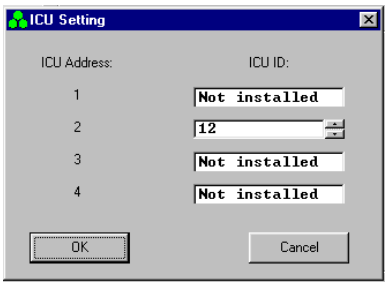

Setting ICU's address is enabled by entering it's ID number (which is known and is the ICU serial number).

4.4.6.2. Software Loading Code

This function enables saving to the BEAMER® details about present loading. Software loading code is an alphanumeric expression up to 20 characters.

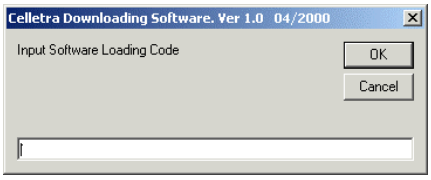

4.4.6.3. Software Remote Loader

This function enables saving of the program loader name into the BEAMER® . Software remote loader is an alphanumeric expression up to 20 characters.

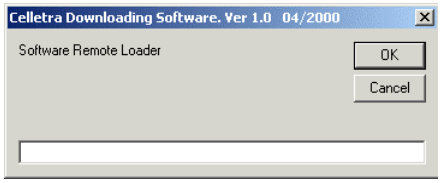

4.4.6.4. Site Name

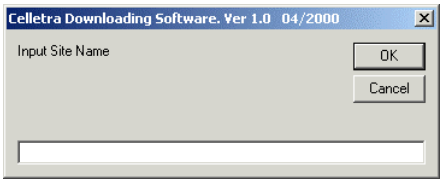

This function enables saving to the BEAMER® the name of the site name where a program was recently loaded to the BEAMER® . Site name is an alphanumeric expression up to 20 characters.

4.4.6.5. Destination

This function enables selecting the required destination for the SW download: BEAMER® or ICU

4.4.6.6. ComPort

This function enables selecting the required communication path from the PC to the ICU. Selection of ComPort function will display the Comm setting window

Connecting the ICU is possible directly via RS232 interface for local connection or via telephone modem for remote connection. The remote connection is enabled in ICU versions that include internal telephone modem. The Comm setting window enables selecting the required path: RS-232 interface or modem. It displays all the available serial ports in the PC and enables selecting a free port in the case where the RS-232 interface is selected.

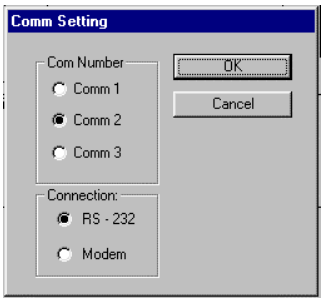

4.4.7. Password Menu

Password menu enables the inclusion of the following functions:

1. Enter password and user name
2. Low level
3. Change the Administrator password

4.4.7.1. Enter Password

Clicking on the Enter password function will display the following window:

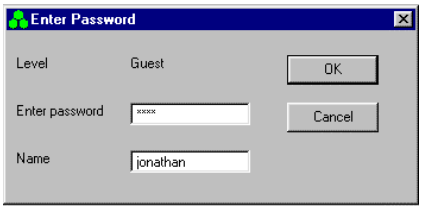

The displayed window enables entering the required password, which enables the loading process.

4.4.7.2. Low Level

Clicking on Low Level sets the Guest level authorization.

4.4.7.3. Change Password

This function is enabled when the Administrator authorization is enabled and enables changing the password for authorization.

4.5. Program Loading Procedure

4.5.1. Procedure for Loading Program to the ICU

To load a new version of application program file to the ICU controller, follow the following instructions:

1. Connect the PC that includes the Celletra program loader program to the ICU via the serial port.
2. If you wish to keep the log file then save it, otherwise the log file will be erased during the new file loading.
3. Operate Celletra program loader program and wait until the address of the ICU appears at the ICU address bar. If the system includes few ICUs, select the address of the required ICU from the address bar.
4. From the Setting menu select Comport and select the required communication path to the ICU.

- If the PC is connected via the serial port of the PC then check the RS-232 and define the COMM port in the PC that is used.
- If the PC is connected via the a telephone line by a modem, then check the MODEM and dial the telephone number of the destination modem.

5. From the Setting menu, click on Destination and select ICU as the destination for loading. The following warning message will appear to warn that the log file will be erased:

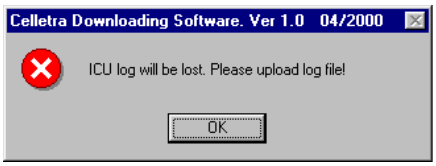

6. Exit to save the log file or Click O.K to continue. The properties of the existing file will be displayed on ICU Software properties field.
7. Click on the Password menu then on Enter to enter the password that enables loading of a new program. After you enter the correct password and your name the Start download command key will be enabled.
8. Click the Start download command key to start the loading process. The following window will be displayed:

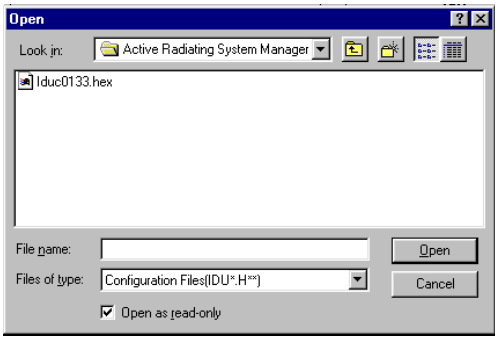

9. Select the required file and click on the Open button. If the selected file is similar to the existing (operational) file then following notice will be displayed:

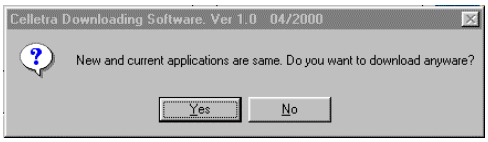

10. If you wish to load the same file anyway then click Yes to continue, otherwise click No and select other file.
11. During the loading process a status bar will be displayed:

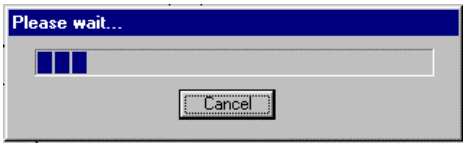

12. Wait about 3 minutes until the process is completed. If you wish to stop loading the file then click on the Cancel button.
13. After the file has been loaded into the RAM successfully the ICU will program the FLASH memory. During the FLASH programming the following message will be displayed:

FLASH PROGRAMMING IN PROGRESS

14. The new program version will operate at the end of this process and the ICU is operational again.

FILE DOWNLOAD TIME OUT ERROR!

15. If the loading process has been failed the following warning message will be displayed:

4.6. Procedure for Loading Program to the BEAMER®

To load a new file (application, DSP prog. file and DSP data file) to the BEAMER® controller follow the following instructions:

1. Connect the PC that includes the Celletra PROGRAM LOADER program to the ICU via the serial port.
2. If you wish to keep the log file then save it, otherwise the log file will be erased during the new file loading.
3. Operate Celletra program loader program and wait until the address of the ICU appears at the ICU address bar. If the system includes few IDUs, select the address of the required ICU from the address bar.
4. From the Setting menu select Comport and select the required communication path to the ICU.
5. If the PC is connected via the serial port of the PC then check the RS-232 and define the COMM port in t he PC that is used.
6. If the PC is connected via a telephone line by a modem then check the MODEM and dial the telephone number of the destination modem.
7. From the Setting menu click on Destination and select BEAMER® as the destination for loading.
8. Click on the Password menu then on Enter to enter the password that enables loading of a new program. After you enter the correct password and your name the Start download command key will be enabled.
9. Click the Start download command key to start the loading process. Clicking the start download button will display a window to enter the required BEAMER® ID number.
10. Enter the ID number of the required BEAMER® and click O.K to continue. In case that the particular ICU ID number does not exist in the system the following warning message will be displayed:

    ERROR : BEAM ER NUMBR 51 IS NOT RESPONDING

    Otherwise the following window will be displayed:

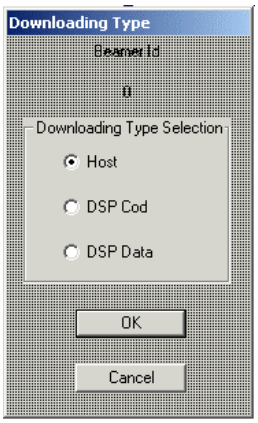

11. Check the required file type for loading and click OK to continue . The following window will enable to select the particular file to be loaded:

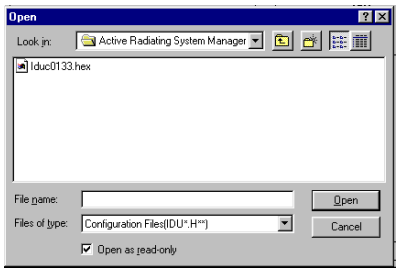

12. Select the required file from the file list and click OPEN for loading

    During the loading process a status bar will be displayed:

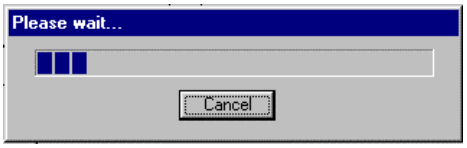

13. Wait until the process is completed. If you wish to stop loading the file then click on the Cancel button.
14. After the file was loaded into the BEAMER® successfully the following message will be displayed:

FILE LOAD WAS COMPLETED SUCCESSFULLY

15. The new program version will operate at the end of this process and the BEAMER® is operational again.

WARRANTY

The following is just to inform you that:

The manufacturer warrants its hardware products against defects in materials and workmanship for a period of one year from receipt by the end user. During the warranty period, the manufacturer will either, at its opinion, repair or replace products that prove to be defective.

The warranty applies to the hardware only.

Refer to RMA procedures for returned goods procedure.

Exclusions

The above warranty shall not apply to defects resulting from: improper or inadequate use, unauthorized modifications or misuse.

Warranty Limitations

Under no circumstances will the manufacturer be liable in any way to the user for damages, including any loss of profits, lost savings, or other incidental or consequential damages arising out of the use of, or inability to use, the product.

INDEX

acronyms, 11
array, 22, 28, 40, 41, 49, 57
    assembly, 28
    dismounting, 28
    installation, 49
    mounting, 28
attenuator, 67
battery
    replacing, 26
BEAMER® ® , 13, 34, 65, 80
    configuring, 37
    control, 68
    defining limits, 61
    installation, 65
    memory, 73
    software download, 73
BEAMER® ® System Manager, 55
Bias-T, 17, 27, 40, 41
BSM, 55, 58
    user interface, 56
channel
    receive, 49
    receive, 46
    transmit, 44, 49
clock, 44
comm, 59
command, 53
communication, 18
communications
    serial, 25
control, 18
DC
    connections, 23
    distribution, 19
failure conditions, 60
file transfer, 72, 73
    PC to BEAMER® ® , 73

PC to ICU, 72
fuse, 23
GUI, 56
ICU, 14
LEDs, 57
loading
BEAMER® ® program, 80
ICU program, 78
programs, 78
logical addresses, 35
maintainability, 20
measurement conditions, 23
menus, 56
messages, 57
ICU, 14, 23, 60, 62, 69, 70, 71, 78
memory, 71
properties, 70
software download, 71
status, 69
monitoring, 18, 57
network, 18
password, 59, 78
program, 51, 78
loading, 78
receive
gain, 50
receive channel, 49
receive channel gain, 46
reports, 57
RF cable, 49
RF path, 16
Rx, 49
Rx gain, 50
Rx-ABT gain, 48
script, 53
serial communications, 25
shut down, 61

Smart-Terminal, 51
software, 58, 71, 73
downloading to BEAMER® ® , 73
downloading to ICU, 71
user interface, 74
user interface for download, 74
sofware, 74
status reports, 57
sub-array, 63, 67
system, 62
system manager, 56
transmit channel, 49
transmit channel gain, 44
Tx, 49
Tx-ABT gain, 45
warranty, 83