OIS-L RF/ID System
Read/Write – Short Range
System Manual

Reg. Nr. LM.0401.EN
Issue 1 / April 2002

- Friday, 26. April 2002 -

Baumer Ident GmbH, Hertzstrasse 10, D-69469 Weinheim,
Deutschland, Tel +49 6201 9957-0, Fax +49 6201 9957-99

www.baumerident.com

Subject to alteration without prior notice.

© Copyright Baumer Ident GmbH 2002

Printed in Germany

Table of Contents

1 Safety precautions 7

2 Foreword 11

2.1 General Information 11

2.2 FCC rules for the USA 11

2.3 Central units covered by this manual 11

2.4 Documents available 12

2.5 Available Central Units 13

3 System description 15

3.1 Introduction 15

3.2 System Principles 15

3.3 Typical System Configuration 16

3.4 Part Number Identification (Type) 17

3.5 Basic Functionality Overview 18

4 System Components 19

4.1 Central units 19

4.1.1 Common Technical Details of Central Units 19

4.1.1.1. Electronic Design 19

Electronic Design – Multiplexer Extension 20

4.1.1.2.1. Common parts of every central unit 20

4.1.1.2.2. Communication modules 21

4.1.2 77LA04/2-SER, -MD, -ET, -DP 22

4.1.2.1. Connector pin assignment 22

4.1.2.1.1. Power supply, Terminal and Digital I/Os 22

4.1.2.1.2. Host interface 23

4.1.2.2. System Diagnostics 25

4.1.2.3. Technical Data 26

Central Unit 77LA04/4 –SER, -DP 27

4.1.3.1. Connector pin assignment 27

4.1.3.1.1. Power supply, Terminal and Digital I/Os 27

4.1.3.1.2. Host interface 28

4.1.3.2. System Diagnostics 30

4.1.3.3. Technical Data 31

4.1.4 Central Unit 77LA04/2-IBS 32

4.1.4.1. Connector pin assignment 32

4.1.4.1.1. Power supply, Terminal and Digital I/Os 32

4.1.4.1.2. Host interface 33
4.1.4.2. Status display of Interbus-S 34
4.1.4.2.1. Monitor (77LA04-IBS only!) 35
4.1.4.3. System Diagnostics 35
4.1.4.4. Technical Data 36
4.2 The Antennae 37
4.2.1 Standard Frame Antennae 38
4.2.1.1. Common data for all frame antennae 39
4.2.2 Special Antennae 39
4.2.2.1. Common data for all special antennae 39
4.2.2.2. 77LS05 39
4.2.2.3. 77LS06 39
4.2.2.4. 77LS07 40
4.2.2.5. 77LS13 40
4.2.2.6. 77LS14 40
4.3 Data Tags 41
4.3.1 Accessing Data Tags 41
4.3.1.1. Basic Definitions 41
4.3.1.2. Read Only Tags 41
4.3.1.3. 256 Bit Read/Write Tag Type 42
4.3.1.4. 2kBit Read/Write Tag Type 42

5 Hints on Installation and System Design 45
5.1 Basic considerations 45
5.2 The antenna lobe 45
5.3 Useful antenna field 45
5.3.1 Width ∅D and W and reading range at distance Ha 47
5.3.2 Operational Read/Write range Ha 47
5.3.3 Peak Read/Write range Hmax 48
5.3.4 Static applications 49
5.3.5 Dynamic applications 49
5.4 Calculating the Passing Speed 49
5.4.1 Communication: Reader – Antenna – Data Tag 50
5.4.1.1. Read Only Tag – 76LDxxx 50
5.4.1.2. General formulas for Read / Write Tag Types 50
5.4.2 Communication: Reader – Host (PC or PLC) 51
5.4.2.1. Serial communication time 51
5.4.3 Correlation of Passing Speed vs. Amount of Read/Write Data 51
5.4.3.1. Component selection 51
5.5 Installation Guidelines 53
5.5.1 Metal-free environment 54
5.5.2 Mounting examples 55
5.5.3 Distance between antennae or tags 56

5.6 EMC Guidelines.....57
5.6.1 General.....57
5.6.2 Shielding concept.....57

6 FAQ's.....59
6.1 Digital Input / Trigger.....59
6.2 Miscellaneous.....59

1 Safety precautions

This product contains components that are sensitive to electrostatic discharges. Please observe the special instructions for their protection. Incorrect handling can damage the unit and cause the invalidation of the warranty.

Minimum safety precautions against electrostatic discharge:

- Establish earth contact before you touch the unit. For example, touch the earthing screw on the unit. even better: Use an antistatic ribbon and earth yourself permanently for the time you handle the unit.
- Avoid unnecessary contact with the unit connectors and assemblies inside the unit.
- Only open the unit if the operational settings (as described in the manual) expressly require this.
- Use antistatic tools for the setting of the unit. (Warning: Do not touch life-threatening voltages with these tools).
- Do not store unit and components without protective packaging.
- Only remove unit and components from the packaging immediately prior to installation.

These notes are not sufficient to guarantee complete protection from electrostatic discharges! We recommend the use of suitable protective equipment.

Safety Instructions

The system described in this manual is for exclusive operation by trained employees. Only qualified personnel that know the potential dangers involved should perform the installation, settings, maintenance and repair of the units used.

Safety Documents

This OIS-L system was designed, tested and supplied in perfect condition according to document IEC348 Safety Requirements for Electronic Units of Class 1.

Operational Safety

The correct and safe use of these systems assumes that operating and service personnel follow the safety measures described in the manual alongside the generally acceptable safety procedures.

If there is a possibility that safe operation cannot be guaranteed the system must be switched off and secured against accidental use. Then the service unit responsible must be informed.

Condensing Water / Change of Temperature

Moving the systems from a cold to a warm environment could lead to dangerous situations due to condensation. Therefore it must be ensured that the system can adjust itself to the warmer temperature.

Opening the Covers or the Housing

Do not open the housing. There is no need to open the housing in order to set the series 77 reader devices. The unit does not have any internal setting elements or displays. All settings are performed via the test terminal port.

The internal parts of the unit, especially the printed circuit boards must be protected against oil, moisture and air contamination. When removing the protective covers make sure that no mechanical damage of the sensitive electronics occur or metal objects (nuts, washers, etc) fall into the unit. Therefore do not open the unit.

Earthing

Before establishing any connections the housing of the system must be earthed.

Connections / Power Supply

The supply circuits must comply with the conditions set out for the SELV circuits (see EN60950).

The signal circuits must comply with the conditions set out for the SELV circuits (see EN60950).

Use screened cables for the power supply. This is the only way to achieve the prescribed EMC.

During maintenance damage could occur if printed circuit boards or cables are connected or disconnected whilst the power supply is still on. Therefore only work on the connection and the components when they are not live.

SELV – Safety Extra Low Voltage – Protective measure against dangerous body currents, formerly: protective first voltage range

EMC – Electromagnetic Compatibility,

Fuses

Only experts who are aware of the dangers involved may replace the fuses. It must be ensured that only fuses of the required current rating and the correct type are used for replacement. The use of repaired fuses and/or short-circuiting the fuse holders is prohibited.

Spare Parts

We recommend that only personnel, original products, spare and replacement parts authorised by Baumer Ident be used for installation, service and repair. Otherwise Baumer Ident does not accept any responsibility for materials used, work carried out or possible consequences.

Electrostatic Discharges

Semi-conductors of the type MOS or CMOS as well as two-pin types and precision resistance are extremely sensitive to ESD. All components, printed circuit boards and auxiliary systems should therefore always be classed as sensitive to electrostatic discharges.

Before opening the cover the unit should be placed onto an ESD-protected surface. As with all work on modern electronic modules the use of ESD clamps and ESD mats during work on the unit is recommended.

- Sufficiently protect all printed circuit boards that were removed from the unit from damage.

- Observe all normal precautions for the use of tools.
- Use ESD-protected packaging material.

Never use measuring units with low impedance for measuring or testing systems with semi-conductor components. Never use high voltage testing units or dielectric test units to test systems with semi-conductor components.

When it becomes necessary to check the isolating properties of the field wiring, the assemblies (electronic units and sensors) should be disconnected.

Earth the test units.

Baumer Ident does not accept returns of products where the regulations concerning the ESD precautions and protective packaging materials were not followed.

ESD – Electrostatic Discharge

2 Foreword

2.1 General Information

This manual is intended to provide the user with assistance in product selection and project planning for the OIS-L Short Range inductive identification system. All relevant product data as well as guidelines for the correct product combinations and installation are included.

This description is valid for all different Read/Write devices of the OIS-L Series 77. A special controller like the PC-Card Read/Write device only supports the subset command set, presented in this document.

News on products and applications for our identification systems are updated on a regular basis and are available under the following Internet address:

http://www.baumerident.com

2.2 FCC rules for the USA

Any changes or modifications of the OIS-L system not expressly approved by Baumer Ident could void the user's authority to operate the equipment.

The OIS-L system consisting of central unit 77LA04/2-SER and antennae 77LS03 complies with the rules of FCC. Only this system configuraton ist allowed to operate in USA.

It ´s **FCC ID** is: **PNTOIS-LSRSER**

The device complies with part 15 of the FCC rules. Operation is subject to the following two conditions: (1) this device may not cause harmful interference, and (2) this device must accept any interference received, including interference that may cause undesired operation.

The connections to the antennae, to the power supply and to the host computer must be done with shielded cables.

The antenna connector contains speciel parts to set the resonance of the antenna at 125 KHz.This can only be done by Baumer Ident in Weinheim.

2.3 Central units covered by this manual

Central units for 2 antennae

Designation	Type	Description	Order code
77LA04/2-SER	ZE.77.SR.02.11	serial interface RS232/422/485 configurable by user	9633-001-SER
77LA04/2-SER-ET	ZE.77.SR.02.13	serial interface RS232/422/485 configurable by user, version for use at extended temperatures: -20 °C ... 50 °C	DD100039
77LA04/2-MD	ZE.77.SR.02.12	serial interface pre-configured for RS485 multidrop use	DD100116
77LA04/2-IBS	ZE.77.SR.02.21	Interbus-S interface	DD100110
77LA04/2-DP	ZE.77.SR.02.31	Profibus DP interface	9633-001-DP

Central units for 4 antennae

Designation	Type	Interface	Order code
77LA04/4-SER	ZE.77.SR.04.11	serial interface RS232/422/485 configurable by user	DD100129
77LA04/4-DP	ZE.77.SR.04.31	Profibus-DP interface	DD100173
77LA04/4-MD	ZE.77.SR.04.12	serial interface pre-configured for RS485 multidrop use	DD100201

The central unit 77LA04/4 is an extension of the 77LA04/2 controller. This central unit can control up to four antennae in a multiplexing arrangement.

2.4 Documents available

Manuals

Central Units Short Range *This document*	LM.0401.EN
Central Units Long Range	LM.0402.EN
Interbus-S Interface	LM.0403.EN
Profibus-DP Interface	LM.0404.EN
Manual Handheld Reader 77HH03	LM.0405.EN
Configuration Software Short	LM.0406.EN
Mounting of special Ring Data Tags	LM.0407.EN
Mounting of ring data tag into floor	LM.0408.EN
Serial Interface	LM.0409.EN
Quick Start Guide [Long Range]	LM.0440.EN

Data Sheets

Central Units Short Range	LD.0301.EN
Central Units Long Range	LD.0302.EN
Interbus-S Interface	LD.0303.EN
Profibus-DP Interface	LD.0304.EN
Standard Antennae (Short Range)	LD.0305.EN
Standard Data Tags	LD.0306.EN
Standard Antennae (Long Range)	LD.0307.EN
Special Frame Antennae	LD.0330.EN
Antenna 77LS05	LD.0331.EN
Antenna 77LS06	LD.0332.EN
Antenna 77LS07	LD.0333.EN
Antenna 77LS14	LD.0334.EN
Antenna 77LS13	LD.0335.EN

General papers

Our company profile	AB.0001.ED
Technical Product Overview	AB.0003.EN

2.5 Available Central Units

Product designation	Type	Description
77LA04/2-SER	ZE.77.SR.02.11	Central Unit, Read/Write, Short Range, for two Antennas, Serial interface RS232/422/485 configurable by user
77LA04/2-MD	ZE.77.SR.02.12	Central Unit, Read/Write, Short Range, for two Antennas, Interface pre-configured for RS485 Multidrop use
77LA04/2-SER-ET	ZE.77.SR.02.13	Central Unit, Read/Write, Short Range, for two Antennas, Serial interface RS232/422/485 configurable by user, Version for use at extended temperatures: -20°C ... 50°C
77LA04/4-SER	ZE.77.SR.04.11	Central Unit, Read/Write, Short Range, for four Antennas, Serial interface RS232/422/485 configurable by user
77LA04/2-IBS	ZE.77.SR.02.21	Central Unit, Read/Write, Short Range, for two Antennas, Glass Fibre Interbus Interface
77LA04/2-DP	ZE.77.SR.02.31	Central Unit, Read/Write, Short Range, for two Antennas, Profibus DP Interface
77LA02-SER	ZE.77.LR.01.11	Central Unit, Read/Write, Long Range, for one Antenna, Serial Interface RS232/422/485 configurable by user
77LA02-DP	ZE.77.LR.01.31	Central Unit, Read/Write, Long Range, for one Antenna, Profibus DP Interface
76LA02-SER	ZE.76.LR.01.11	Central Unit, Read-only, Long Range, for one Antenna, Serial Interface, RS232/422/485
76LA02-DP	ZE.76.LR.01.31	Central Unit, Read-only, Long Range, for one Antenna, Profibus DP Interface
77HH03	ZE.77.HH.03	Handheld Unit, Read/Write, based on PSION workabout® or alternativelly with Barcode Scanner
77PC01	ZE.77.PC.01.91	PC Card Type II Unit, Read/Write, for one Antenna

3 System description

3.1 Introduction

The OIS-L Series 77 is an inductive identification system, generally referred to as RF-ID. It is intended for applications in logistics systems. The OIS-L standard system consists of three units:

- Transponder with a Read/Write memory
- Antenna for energy and data transmission
- Central unit with analogue and digital data processing

The OIS-L Series 77 Standard Range RF-ID system is a family of products that have been developed to meet the market demands for industrial identification products with a high degree of modularity to solve a variety of tasks in logistics and other applications.

3.2 System Principles

The OIS-L-system is a passive RF-system in the lower 125 kHz frequency band (ca. 125 kHz).

The programmable data tag consists of a CMOS-Chip with an EEPROM memory and a coil. The reader, is made up of all of the components required for the transmission of energy and the reception of the demodulated signals from the tag. The energy is transmitted to the tag via an alternating magnetic field, analogous with the principle of a transformer.

If a transponder comes within the useful area of the magnetic field it receives the required energy it is then ready to receive commands, to either store a code in memory or to send the contents of all or a part of the memory.

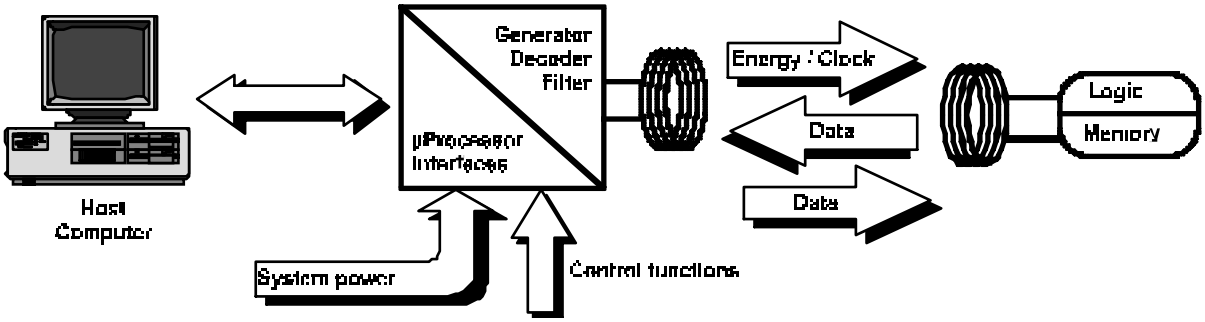

System overview

The signals are detected (demodulated) by an analogue circuit and passed on to the digital circuitry. Here the microprocessor and related software checks the data transmission, converts the code and in the event that the transmission was read the code is made available to the host computer for further data processing.

The chip requires a field voltage of about 3,5V to become active. This tension is induced by the alternating magnetic field. The data transmission is done by means of an amplitude modulation, using the Manchester code.

The detection of 32 full oscillations, indicates that one bit has been transmitted. This kind of data transmission is very insensitive to external disturbances from other electrical equipment and is particularly suited for industrial applications.

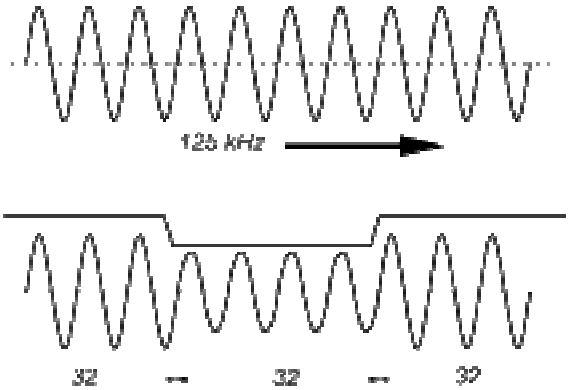

The reading distance is dependant on the power of the magnetic field and the exact frequency tuning (compare radio reception). Normally an up-

per limit for this technology is set at 1 meter (40") however for small tag/reader combinations these values are in the range 1 to 30 centimetres (0.5" - 12").

3.3 Typical System Configuration

The OIS-L Series 77 Standard Range Read/Write system consists of the central unit 77LA04-X and one or two short range antennae (selected from the 77 Series Antenna range). The data tags can be either the fixed code type (series 76) or the Read/Write type (series 77): The Read/Write data tags come in two different memory sizes, 256 bit or 2 kbit.

The following diagram shows an overview of the standard products in the Read/Write system. The data tags come in differing shapes, sizes, and housing materials. Some are coin-shaped; others are packaged in PVC and are the size and shape of a credit card.

Although the majority of data tags would function in combination with any of the antennae, we have grouped them into logical groups highlighting the desired combinations, that enable the user to achieve tled information relating to the reading distances for the various antennae/tag combinations are shown later in this document.

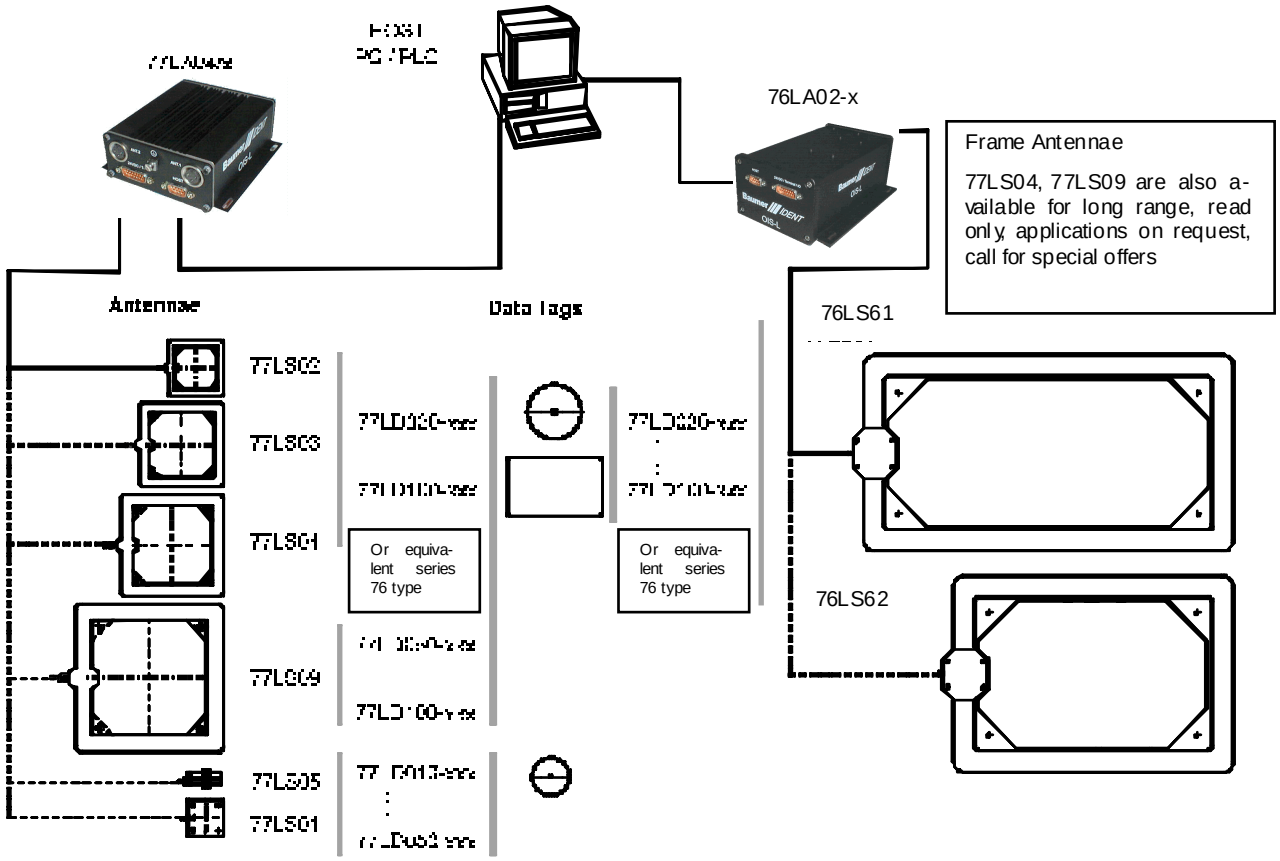

3.4 Part Number Identification (Type)

General form: $$.NN.$$.$$.$$, where $ is a letter, and N is a number.

Explanation

In order to have a structured part numbering system the following definitions apply.

An existing part numbering system is already in circulation e.g. 77 LA04. These names are easy for the existing user to identify, however they are not always unique to a particular product. An example would be the part number 77LS03 this identifies an antenna but the version or tuning of this antenna is not included in this part number.

	Field No.	Description	Possible Values
$$	1	Class of component	ZE: Central unit AN: Antenna KA: Cable etc.
N	2	System group	76: Read only System 77: Read/Write System
$$	3	Subclass	LR: Long Range SR: Short Range HH: Hand-held reader or related component PC: PC-Card Reader or related component
$$	4	Product denomination	00 … 99 For antennae: Indicator for antenna size/geometry For central units (Field 1=ZE): Number of antennae connectors
$$	5	Product modifications	00 … 99 For antennae: Indicates modifications like special tuning, or special material etc., consecutively numbered For central units (Field 1 = ZE) First digit: 1: serial Interface 2: Interbus-S 3: Profibus-DP Second digit: indicates modification like different mounting holes, surface colour, special connectors, etc. Consecutively numbered
$$	1		Always = DT, for data tag
N	2	Indicates internal chip type	00: EM4102, read only 01: Hitag1, 2kBit 02: Hitag2, 256 bit
N	3		000 … 999 Related to coil size, tags with identical values in this field will have identical communication range within air
N	4	Housing	00 … 99 For different materials or geometries, consecutively numbered

3.5 Basic Functionality Overview

Basic functionality overview

	Central Unit	Antenna	Data Tags
Short Range R/W			
Product designation:	77LA04/x-yy	77LS01 … 77LS14	76LDxxx-yy, 77LDxxx-yyy
Type:	ZE.77.SR.xx.yy	AN.77.SR.xx.yy	DT.0x.yyy.zz

4 System Components

4.1 Central units

The Baumer Ident short range inductive identification system OIS-L has been developed with respect to the regulation EN 300330 class 2. Thus, **passive antennae** connected to a **central unit** is the basic system concept. Antennae can be easily designed for customers request. No additional approbation or certification of the complete system is necessary. By the technique of multiplexing, some central units can handle more than one antenna.

The high protection class of all central units make them ready to use within an industrial environment. Whether outdoor-use, rain or dust, the system always operates reliably. Direct mounting on vehicles in particular lift trucks is possible.

Various bus interfaces including high layer software facilitate the connection to host systems for engineers. The intelligent configuration software provides easy installation and system start-up by the customers qualified personnel. A special Baumer Ident feature is the possibility of automatic on-site antenna adjustment by software. This enables the optimisation of already installed systems whereby the environment is automatically considered by the adjustment process.

The system works with EM4102, HiTag 1 and HiTag 2 chip transponders.

4.1.1 Common Technical Details of Central Units

4.1.1.1. Electronic Design

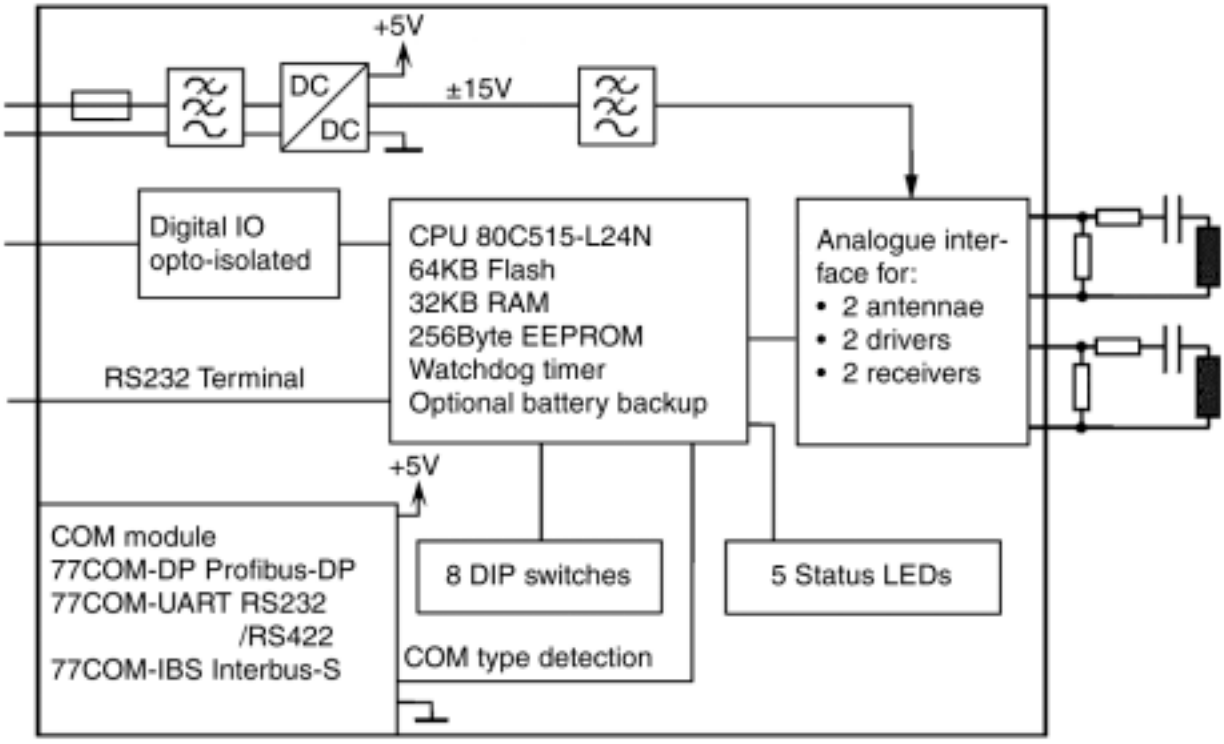

Block diagram of the central unit 77LA04/2

4.1.1.2. Electronic Design – Multiplexer Extension

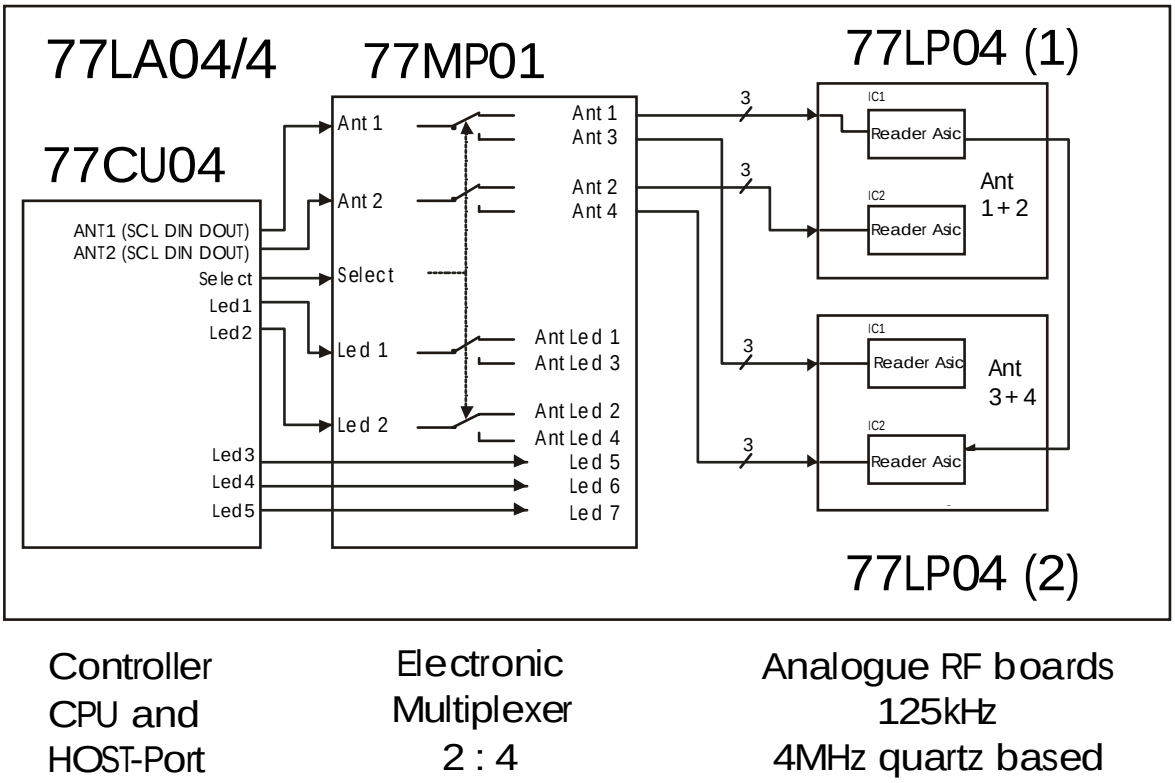

Block diagram of the central unit 77LA04-04

4.1.1.2.1. Common parts of every central unit

Power supply

The processor board contains the power supply in the form of a galvanically separated DC-DC converter, operating between 18 and 36 V DC. The converter provides the different internal tensions for the analogue board, the COM-module and ancillary electronics. This converter is protected against polarisation errors.

Analogue module

The analogue module handles the energy transmission to the tag over the antenna and the demodulation of the data signals received from the data tag. The analogue board receives control signals, required for the communication with the data tag, from the processor board. The board contains two separate, identical circuits to handle two separate antennae.

Processor board

A non-galvanically separated RS232 interface is provided for the configuration of the central unit.

The digital inputs and outputs (I/Os) are opto-coupled.

The processor of the central unit handles the commands from a host computer (PC or PLC) as well as the data transfer to and from the antenna. This electronic circuitry consists of the following components:

- Micro controller C515A-L24M or
- Micro controller 80C515
- System memory 32 kByte RAM

Programme memory

- 64 kByte EPROM

This memory contains the programme for the system self-test and the operating system

- Serial EEPROM 32 kByte

This memory serves the purpose of storing the configuration data. The data may be altered via the terminal

Digital I/Os

The two galvanically separated digital inputs have a permissible input voltage of:

`1'-signal 16 ... 36 V (max. 10 mA)

`0'-signal -2 ... +2 V

The above is valid when using an input resistor of about 3kΩ.

The two galvanically separated digital outputs have an allowed switching voltage of:

10 ... 36 V / 0,05 A (50 mA)

See also the following section for further details.

Terminal

The terminal interface is used for system configuration and diagnostics purposes. It is intended to be connected to a personal computer running a terminal emulation software. The terminal is a RS232 interface. It is not galvanically separated (not opto-isolated).

4.1.1.2.2. Communication modules

The communication modules make up the system interface between the reader and a host computer (PC or PLC).

The system has automatic interface detection so that no setting is necessary.

77COM-SER

The serial communication module 77COM-SER integrates a UART of the type 16C550 as a serial interface in the respective memory area of the processor. The driver-ICs are fed from a DC/DC converter via galvanically separated opto-couplers. They provide the following host interfaces:

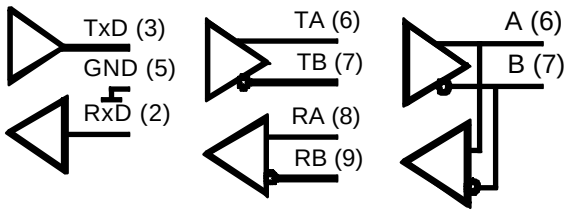

RS 232 RS 422 RS 485

Only one of these options may be connected at any given time.

You must not connect any unused wires!

77 COM-DP

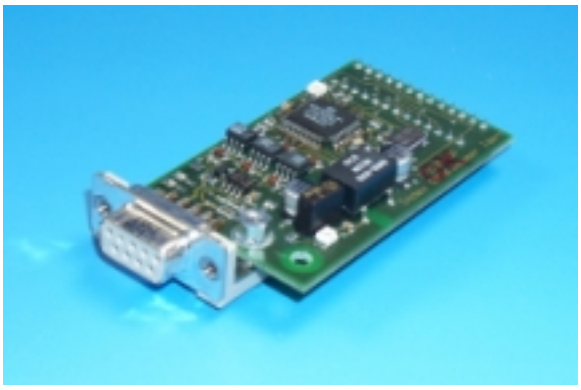

The communication module 77COM-DP integrates a Profibus-DP interface with maximally 12 Mbaud in the memory area of the processor.

77COM-IBS

upper connector IBS-OUT, lower connector IBS-IN

Interbus module and integrated SUPI3 controller with 10 IBS words IN and 10 IBS words OUT. Connection with the OIS-L controller is via a serial interface.

4.1.2 77LA04/2-SER, -MD, -ET, -DP

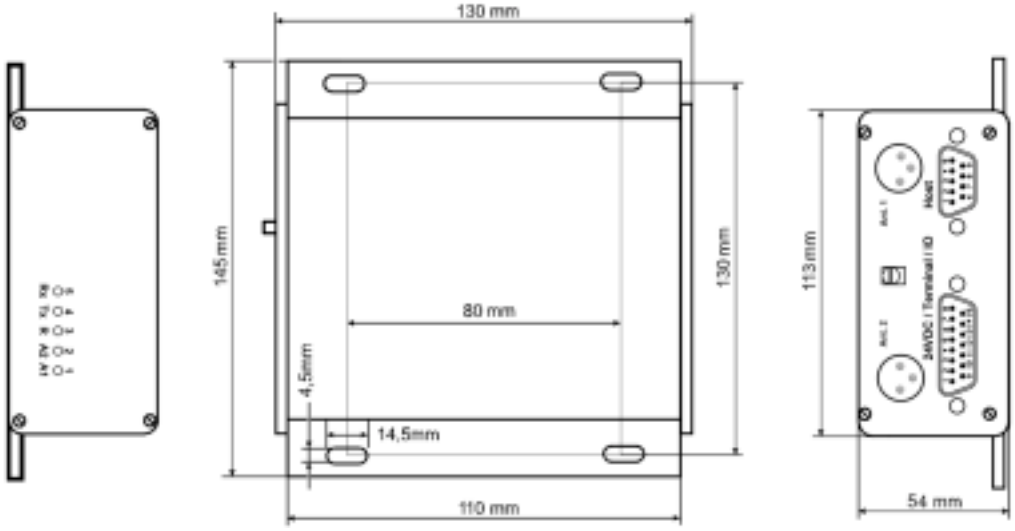

Dimensional drawing – 77LA04/2-SER, -SER-ET, -MD, -DP

4.1.2.1. Connector pin assignment

The supply circuits must comply with the requirements of the SELV circuits (see EN60950).

A screened cable must be used for the power supply. Only in that way the required EMC is achieved.

SELV – Safety Extra Low Voltage – Protective measure against dangerous body currents. Protective first voltage, circuit not floating.

EMC – Electromagnetic Compatibility

The signal circuits must comply with the requirements of the SELV circuits (see EN60950).

SELV – Safety Extra Low Voltage – Protective measure against dangerous body currents. Protective first voltage, circuit not floating

4.1.2.1.1. Power supply, Terminal and Digital I/Os

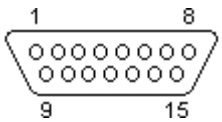

Pin	Signal description		
1, 9	Power supply,	24 VDC,	V+
2, 10	Power supply,	0 VDC,	V-
14	Digital input 1,	anode,	+
6	Digital input 1,	cathode,	-
13	Digital input 2,	anode,	+
5	Digital input 2,	cathode,	-
12	Digital output 1,	collector,	+
4	Digital output 1,	emitter,	-
11	Digital output 2,	collector,	+
3	Digital output 2,	emitter,	-
7	Terminal interface	GND	
8	Terminal interface	RxD	
15	Terminal interface	TxD	

Terminal Interface

On the 15-pin D-sub connector there is a terminal Interface RS232 available for service and diagnostic purposes.

When the central unit is equipped with the Profibus-DP communication module 77COM-DP, the terminal interface is also used to set the correct Profibus slave address.

Warning! The terminal Interface is not galvanically Separated!

Digital I/Os

The two galvanically separated digital inputs have a permissible input voltage of:

'1'-signal 16 … 36 V (max. 10 mA)

'0'-signal -2 … +2 V

The above is valid when using an input resistor of about 3kΩ.

The two galvanically separated digital outputs have an allowed switching voltage of:

10 … 36 V / 0,05 A (50 mA)

4.1.2.1.2. Host interface

Serial host interface (in central unit 77LA04-SER only)

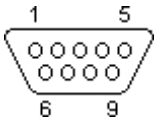

Pin	Signal description
2	RS 232 RxD
6	RS 232 TxD
5	RS 232 GND
6	RS 422 TA and RS 485 A
7	RS 422 TB and TS 485 B
8	RS 422 RA
9	TS 422 RB
1	VTERM for RS 422 and RS 485 (max 20 mA)

You must not connect any unused wires!

Profibus DP host interface (in central unit 77LA04-DP only)

The host interface corresponds to the Profibus-DP specifications.

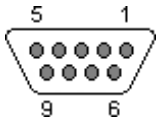

Pin	Name	Signal description
1	Shield	Shield / Protective ground
2	M24	Earth for 24 V voltage out
3	RxD/TxD-P	Receive / Transmit signals – positive
4	CNTR-P	Control signal for repeater – positive
5	DGND	Data ground (ground to VP)
6	VP	Voltage supply for the termination resistors (+5V)
7	P24	voltage out 24V
8	RxD/TxD-N	Receive / Transmit – negative
9	CNTR-N	Control signal for repeater – negative

Figures in bold typeface are mandatory and must be provided by the user.

Cable parameters

The bus cable is specified as cable type A within the standard EN50170 and can be applied according to the following table:

Parameter	Cable A
Wave resistance	135 .. 165 Ω
Line Capacity	< 30 pF/m
Loop resistance	110 Ω/m
Core diameter of the signal cable	Ø 0,64 mm
Core cross section	> 0,34 mm²

In adhering to the above parameters, the following distances for a bus segment (branch) can be achieved:

Baudrate (Kbit/sec)	Max. cable length
9.6	1,200
19.2	1,200
93.75	1,200
187.5	1,200
500	400
1500	200
12,000	100

- Short branch cables (< 6,6 m) may be used up to 1.500 kbit/sec.
- above this speed no branch cables should be used.

Bus termination

If cable A according to EN50170 is used, a resistor combination should be used as bus termination to warrant a defined potential on the line.

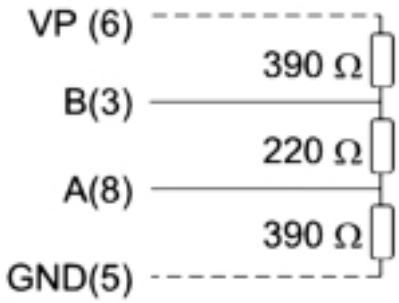

Schematic of bus termination

The cable shield must be connected to the protective ground to prevent EMC disturbances from reaching into the central unit. The power supply to the termination resistors on pin 6 is only intended for that purpose and thus restricted to 10 mA.

It is important that the connectors at both ends of the Profibus-DP cable are equipped with termination resistors. If this is not the case there may be problems with the transmission.

4.1.2.2. System Diagnostics

LED Description

On the rear side of the controller there are 5 LED's situated as shown in the diagram below:

LED Layout on backpanel

No.	Signal name	Function
1	A1 – Antenna 1 active	When lit, the antenna is active, executing a Read/Write command with a tag or the controller is waiting for a tag at this antenna (automatic Read/Write mode)
2	A2 – Antenna 2 active	ditto with antenna 2
3	R – RUN mode – flashing 1/2s	A flashing LED indicates that the controller is running. When entering the Monitor – the LED stops flashing – the last LED state remains active until the normal program operation continues. Note: the Monitor program stops automatically on missing terminal inputs after about 30 seconds and the normal operation continues.
4	Tx – Transmitting data	The controller sends data via the host port (Serial or Profibus) – the LED is switched ON just before the data is put into the output FIFO buffer and switched OFF when the last character of data is placed in the communication device.
5	Rx – Receiving data	When the controller fetches a complete command from the communication device the LED switches ON. The LED switches OFF when the message receive has completed. With Profibus DP the LED switches ON at any change of the controller inputs state (CTL-octet) and switches OFF when the decoded command transfer to the command execution module (command parser) has completed. Hint: A flickering Rx-LED on Profibus without any flickering of the Tx-LED (for responses) indicates that the host does not handle the command handshake bits correctly – in this case refer to the section in this manual describing the CTL Bit Handshake Protocol.

4.1.2.3. Technical Data

The protection class IP65 is only valid when protective caps are fitted to the unused connectors and cables with sealed connectors are used.

Operating Data

Operating frequency	125 kHz
Antenna type	separate, series 77LSxx
No. of antennae	1
Data transfer speed	9600 baud (-SER)
Interfaces	
Serial	RS 232/422/485 9-pin D-Sub male
Profibus-DP	9-pin D-Sub female
Device addressing	software command or dip-switch (optional)

Electrical Data

Supply voltage	24 VDC ±10%
Power consumption	max. 200 mA
Supply connector	D-Sub 15-pin, combined with IO and testterminal
Antenna connection	
Immunity	EN50082-2, Class 3
Emission	EN55022, Class A

Mechanical data

Housing

Housing material	aluminium
Outer dimensions	
77LA04/2-SER, -ET, -MD, -DP	145 × 130 × 54 mm
Weight	
77LA04/2-SER, -ET, -MD, -DP	700 g

Environmental Conditions

measured according to EN 60068-2-30

Temperature range	0 … +50 °C (Operating) -10 … +60 °C (Storage)
77LA04/2-ET	-10 … +50 °C (Operating)
Protection class	IP 63 *
Climate, Upper temperature	+55 °C, 93 % rel. humidity
Climate, Lower temperature	+25 °C, 97 % rel. humidity
Duration of climate test	2 cycles, 24 h each

** IP65 when protective caps are fitted to the unused connectors and cables with sealed connectors are used.*

Vibration test IEC 68 Part 2-6

Wave type	Sine form
Frequency band	2 – 500 Hz
Amplitude	2 – 8 Hz 7,53 mm peak./peak.
	8 – 200 Hz, 2 g
	200 – 500 Hz, 4 g
Sweep speed	1 oct / min
Duration of test	2 h per axis

Shock test (long-term) IEC 68 Part 2-29

Shock form	half sine form
Amplitude	15 g
Duration of shock	6 ms
Number of shocks	4.000 *

Shock test IEC 68 Part 2-27

Shock form	half sine form
Amplitude	30 g
Duration of shock	15 ms
Number of shocks	3 *

** Measured in both directions of the 3 main axis of the test object, oriented orthogonal to each other.*

4.1.3 Central Unit 77LA04/4 –SER, -DP

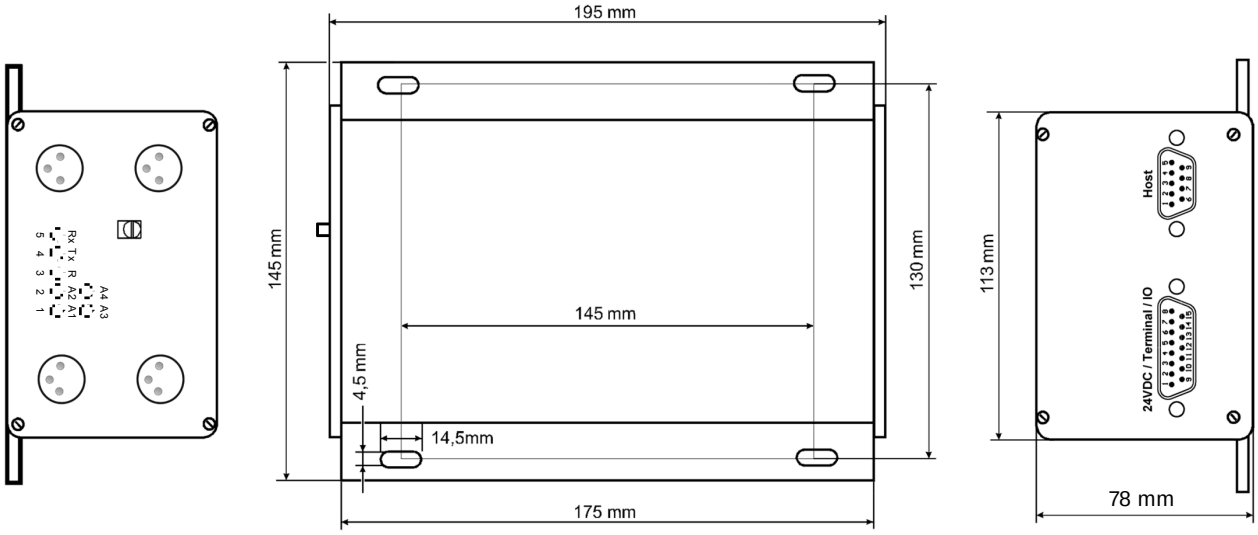

Dimensions 77LA04/4-SER, -DP

4.1.3.1. Connector pin assignment

The supply circuits must comply with the requirements of the SELV circuits (see EN60950).

A screened cable must be used for the power supply. Only in that way the required EMC is achieved.

SELV – Safety Extra Low Voltage – Protective measure against dangerous body currents. Protective first voltage, circuit not floating.

EMC – Electromagnetic Compatibility

The signal circuits must comply with the requirements of the SELV circuits (see EN60950).

SELV – Safety Extra Low Voltage – Protective measure against dangerous body currents. Protective first voltage, circuit not floating

4.1.3.1.1. Power supply, Terminal and Digital I/Os

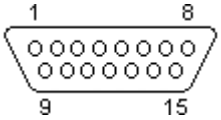

Pin	Signal description		
1, 9	Power supply,	24 VDC,	V+
2, 10	Power supply,	0 VDC,	V-
14	Digital input 1,	anode,	+
6	Digital input 1,	cathode,	-
13	Digital input 2,	anode,	+
5	Digital input 2,	cathode,	-
12	Digital output 1,	collector,	+
4	Digital output 1,	emitter,	-
11	Digital output 2,	collector,	+
3	Digital output 2,	emitter,	-
7	Terminal interface	GND	
8	Terminal interface	RxD	
15	Terminal interface	TxD	

Terminal Interface

On the 15-pin D-sub connector there is a terminal Interface RS232 available for service and diagnostic purposes.

When the central unit is equipped with the Profibus-DP communication module 77COM-DP, the terminal interface is also used to set the correct Profibus slave address.

Warning! The terminal Interface is not galvanically Separated!

Digital I/Os

The two galvanically separated digital inputs have a permissible input voltage of:

‘1’-signal 16 … 36 V (max. 10 mA)

‘0’-signal -2 … +2 V

The above is valid when using an input resistor of about 3kΩ.

The two galvanically separated digital outputs have an allowed switching voltage range of:

10 … 36 V / 0,05 A (50 mA)

4.1.3.1.2. Host interface

Serial host interface (in central unit 77LA04-SER)

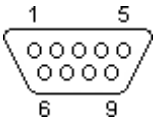

Pin	Signal description
2	RS 232 RxD
6	RS 232 TxD
5	RS 232 GND
6	RS 422 TA and RS 485 A
7	RS 422 TB and TS 485 B
8	RS 422 RA
9	TS 422 RB
1	VTERM for RS 422 and RS 485 (max 20 mA)

You must not connect any unused wires!

The cable has to be shielded!

Profibus DP host interface (in central unit 77LA04-DP)

The host interface corresponds to the Profibus-DP specifications.

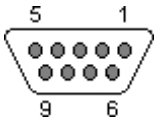

Pin	Name	Signal description
1	Shield	Shield / Protective ground
2	M24	Earth for 24 V voltage out
3	RxD/TxD-P	Receive /Transmit signals – positive
4	CNTR-P	Control signal for repeater – positive
5	DGND	Data ground (ground to VP)
6	VP	Voltage supply for the termination resistors (+5V)
7	P24	voltage out 24V
8	RxD/TxD-N	Receive /Transmit – negative
9	CNTR-N	Control signal for repeater – negative

Figures in bold typeface are mandatory and must be provided by the user.

Cable parameters

The bus cable is specified as cable type A within the standard EN50170 and can be applied according to the following table:

Parameter	Cable A
Wave resistance	135 .. 165 Ω
Line Capacity	< 30 pF/m
Loop resistance	110 Ω/m
Core diameter of the signal cable	Ø 0,64 mm
Core cross section	> 0,34 mm²

In adhering to the above parameters, the following distances for a bus segment (branch) can be achieved:

Baudrate (Kbit/sec)	Max. cable length
9.6	1,200
19.2	1,200
93.75	1,200
187.5	1,200
500	400
1500	200
12,000	100

- Short branch cables (< 6,6 m) may be used up to 1.500 kbit/sec.
- above this speed no branch cables should be used.

Bus termination

If cable A according to EN50170 is used, a resistor combination should be used as bus termination to warrant a defined potential on the line.

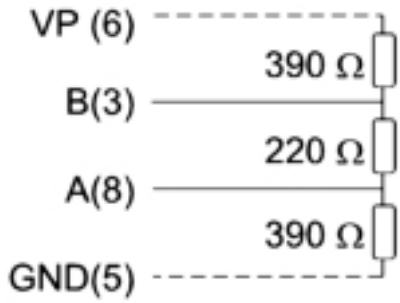

Schematic of bus termination

The cable shield must be connected to the protective ground to prevent EMC disturbances from reaching into the central unit. The power supply to the termination resistors on pin 6 is only intended for that purpose and thus restricted to 10 mA.

It is important that the connectors at both ends of the Profibus-DP cable are equipped with termination resistors. If this is not the case there may be problems with the transmission.

4.1.3.2. System Diagnostics

LED Description

On the rear side of the controller there are 7 LED's situated as shown in the diagram below:

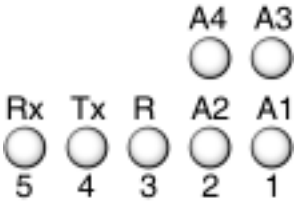

LED Layout on backpanel

No.	Signal name	Function
1	A1 – Antenna 1 active	When lit, the antenna is active, executing a Read/Write command with a tag or the controller is waiting for a tag at this antenna (automatic Read/Write mode)
2	A2 – Antenna 2 active	ditto with antenna 2
1 up	A3 – Antenna 3 active	ditto with antenna 3
2 up	A4 – Antenna 4 active	ditto with antenna 4
3	R – RUN mode – flashing 1/2s	A flashing LED indicates that the controller is running. When entering the Monitor – the LED stops flashing – the last LED state remains active until the normal program operation continues. Note: the Monitor program stops automatically on missing terminal inputs after about 30 seconds and the normal operation continues.
4	Tx – Transmitting data	The controller sends data via the host port (Serial or Profibus) – the LED is switched ON just before the data is put into the output FIFO buffer and switched OFF when the last character of data is placed in the communication device.
5	Rx – Receiving data	When the controller fetches a complete command from the communication device the LED switches ON. The LED switches OFF when the message receive has completed. With Profibus DP the LED switches ON at any change of the controller inputs state (CTL-octet) and switches OFF when the decoded command transfer to the command execution module (command parser) has completed. Hint: A flickering Rx-LED on Profibus without any flickering of the Tx-LED (for responses) indicates that the host does not handle the command handshake bits correctly – in this case refer to the section in this manual describing the CTL Bit Handshake Protocol.

4.1.3.3. Technical Data

The protection class IP65 is only valid when protective caps are fitted to the unused connectors and cables with sealed connectors are used.

Operating Data

Operating frequency	125 kHz
Antenna type	separate, series 77LSxx
No. of antennae	1
Data transfer speed	9600 baud (-SER)
Interfaces	
Serial	RS 232/422/485 9-pin D-Sub male
Profibus-DP	9-pin D-Sub female
Device addressing	dip-switch or software command

Electrical Data

Supply voltage	24 VDC ±10%
Power consumption	max. 200 mA
Supply connector	D-Sub 15-pin, combined with IO and testterminal
Antenna connection	
Immunity	EN-50082-2, Class 3
Emission	EN-55022, Class A

Mechanical data

Housing

Housing material	aluminium
Outer dimensions	
77LA04/4-SER, -DP	195 × 145 × 78 mm
Weight	
77LA04/4-SER, -DP	1.1 kg

Environmental Conditions

measured according to EN 60068-2-30

Temperature range	0 … +50 °C (Operating) -10 … +60 °C (Storage)
Protection class	IP 63 *
Climate, Upper temperature	+55 °C, 93 % rel. humidity
Climate, Lower temperature	+25 °C, 97 % rel. humidity
Duration of climate test	2 cycles, 24 h each

** IP65 when protective caps are fitted to the unused connectors and cables with sealed connectors are used.*

Vibration test IEC 68 Part 2-6

Wave type	Sine form
Frequency band	2 – 500 Hz
Amplitude	2 – 8 Hz 7,53 mm peak./peak.
	8 – 200 Hz, 2 g
	200 – 500 Hz, 4 g
Sweep speed	1 oct / min
Duration of test	2 h per axis

Shock test (long-term) IEC 68 Part 2-29

Shock form	half sine form
Amplitude	15 g
Duration of shock	6 ms
Number of shocks	4.000 *

Shock test IEC 68 Part 2-27

Shock form	half sine form
Amplitude	30 g
Duration of shock	15 ms
Number of shocks	3 *

** Measured in both directions of the 3 main axis of the test object, oriented orthogonal to each other.*

4.1.4 Central Unit 77LA04/2-IBS

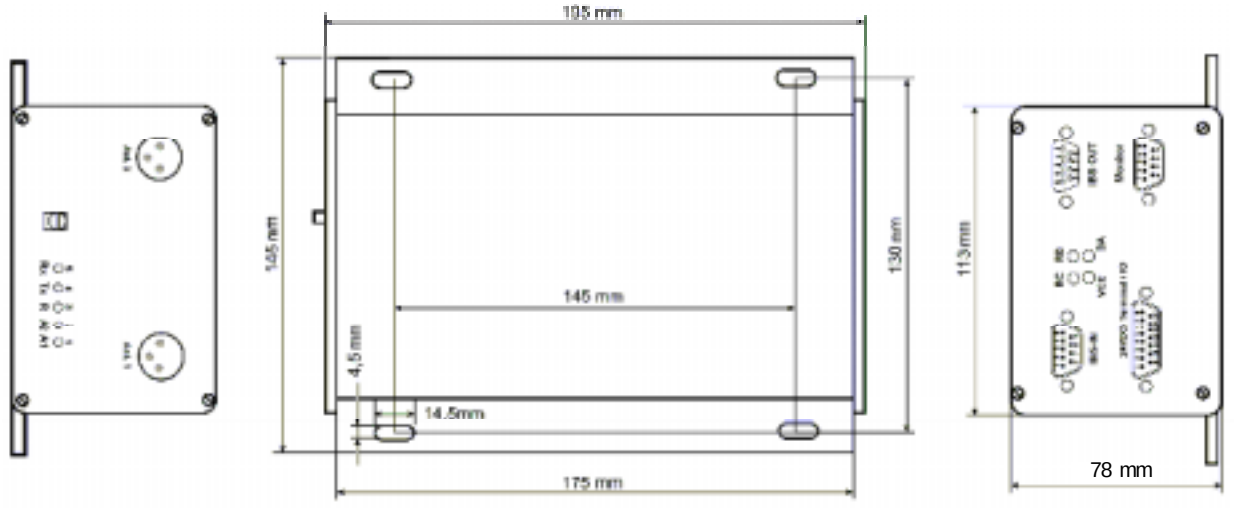

Picture 1

Dimensions 77LA04/2-IBS

4.1.4.1. Connector pin assignment

The supply circuits must comply with the requirements of the SELV circuits (see EN60950).

A screened cable must be used for the power supply. Only in that way the required EMC is achieved.

SELV – Safety Extra Low Voltage – Protective measure against dangerous body currents. Protective first voltage, circuit not floating.

EMC – Electromagnetic Compatibility

The signal circuits must comply with the requirements of the SELV circuits (see EN60950).

SELV – Safety Extra Low Voltage – Protective measure against dangerous body currents. Protective first voltage, circuit not floating

4.1.4.1.1. Power supply, Terminal and Digital I/Os

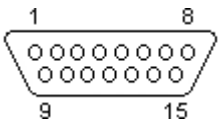

Pin	Signal description		
1, 9	Power supply,	24 VDC,	V+
2, 10	Power supply,	0 VDC,	V-
14	Digital input 1,	anode,	+
6	Digital input 1,	cathode,	-
13	Digital input 2,	anode,	+
5	Digital input 2,	cathode,	-
12	Digital output 1,	collector,	+
4	Digital output 1,	emitter,	-
11	Digital output 2,	collector,	+
3	Digital output 2,	emitter,	-
7	Terminal interface	GND	
8	Terminal interface	RxD	
15	Terminal interface	TxD	

Terminal Interface

On the 15-pin D-sub connector there is a terminal Interface RS232 available for service and diagnostic purposes.

Warning! The terminal Interface is not galvanically Separated!

Digital I/Os

The two galvanically separated digital inputs have a permissible input voltage of:

'1'-signal 16 … 36 V (max. 10 mA)

'0'-signal -2 … +2 V

The above is valid when using an input resistor of about 3kΩ.

The two galvanically separated digital outputs have an allowed switching voltage of:

10 … 36 V / 0,05 A (50 mA)

4.1.4.1.2. Host interface

Interbus S host interface (in central unit 77LA04/2-IBS only)

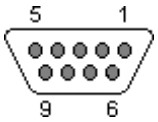

Interbus S IN – Remote Bus (female)

Pin	Name	Description
1	DO	Data Out
2	DI	Data In
3	COM	Data Ground
4	GND	Power supply for opto converter
5		
6	/DO	Data Out inverted
7	/DI	Data In inverted
8	+5V	Power supply for opto converter
9	U	

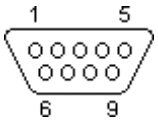

Interbus S OUT – Device Side (male)

Pin	Name	Description
1	DO	Data Out
2	DI	Data In
3	COM	Data Gound
4	GND	Power supply for opto converter
5	BC	Bus Control (+5V)
6	/DO	Data Out inverted
7	/DI^	Data In inverted
8	+5V	Power supply for opto converter
9	U	

Recommended wiring

IBS-Out IBS-In

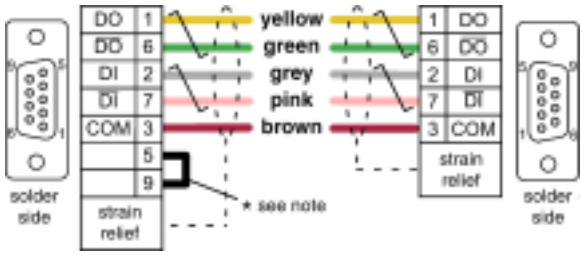

** This bridge is made if another module follows down the line and is only on the Out-Port.*

Conversion to fibre optic transmission

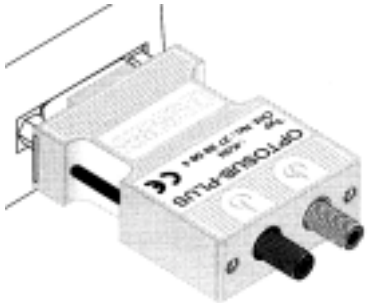

Available converters

- Remote-OUT to glass fibre
  OPTOSUB-PLUS-G/OUT – 27 99 63 6
- Remote-OUT to polymer fiber
  OPTOSUB-PLUS-K/OUT – 27 99 61 0
- Remote-IN to glass fiber
  OPTOSUB-PLUS-G/IN 27 99 62 3
- Remote-IN to polymer fibre
  OPTOSUB-PLUS-K/IN 27 99 58 4

Please contact the manufacturer for detailed information. PDF files are available on the internet at:

http://www.phoenixcontact.com

Cables required for Interbus S wiring

Characteristic quantity @ 20 °C	Value	Test method
Number of conductors	3 × 2, twisted pair with common shield	
Conductor cross section	Min. 0.2 mm²	
DC conductor resistance per 100m	Max. 9.6 Ω	IEC 189-1 clause 5.1
Characteristic impedance	120 Ω ± 20 % @ f = 0.064 MHz 100 Ω ± 15 Ω @ f > 1 MHz	IEC 1156-1 clause 3.3.6
Dielectric strength		
- Conductor / conductor	1000 V_{rms}, 1 min	IEC 189-1 clause 5.2
- Conductor / shield	1000 V_{rms}, 1 min	IEC 189-1 clause 5.2
Insulation resistance (after dielectric strength test)	Min. 150 MΩ for a cable of 1 km	IEC 189-1 clause 5.3
Maximum transfer impedance @ 30 MHz	250 mΩ/m	IEC 96-1
Working capacitance @ 800 Hz	Max. 60 nF for a cable of 1 km	IEC189-1 clause 5.4

4.1.4.2. Status display of Interbus-S

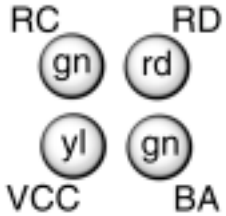

Colour	Name	Description
gn	RC	**Remote bus Check. Shows existing connection to foregoing Remote bus. It is active, if the in coming remote Bus is okay and the master is switched on.**
rd	RD	Disabled remote Bus. Shows the status of the remote Interface. ON means the remote interface is switched off.
yl	VCC	Positive supply voltage on an IC plus 5V
gn	BA	Bus active. This LED shows the data on the Interbus cycles ON while sending a message to the PLC/PC via the HOST-Port

4.1.4.2.1. Monitor (77LA04-IBS only!)

This connection is intended to listen to the internal data transfer between CPU and interface board.

You must not feed signals into any one of the pins!

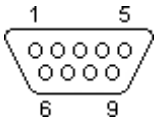

Pin	Signal description
2	**RS 232 RxD – Monitor output** [1)]
3	**RS 232 TxD – Monitor output** [1)]
4	- do not use -
5	**RS 232 GND** [1)]
6	- do not use -
7	- do not use -
8	- do not use -
9	- do not use -
1	- do not use -

[1)] connector requires special cable!

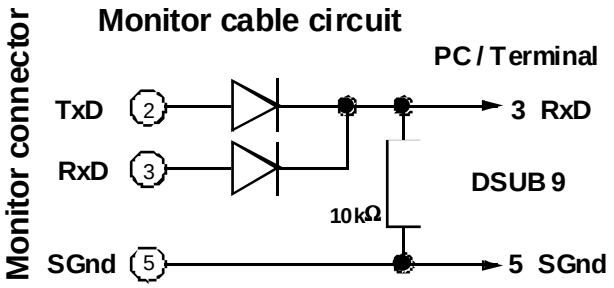

4.1.4.3. System Diagnostics

LED Description

On the rear side of the controller there are 5 LED's situated as shown in the diagram below:

LED Layout on backpanel

No.	Signal name	Function
1	A1 – Antenna 1 active	When lit, the antenna is active, executing a Read/Write command with a tag or the controller is waiting for a tag at this antenna (automatic Read/Write mode)
2	A2 – Antenna 2 active	When lit, the antenna is active executing a Read/Write command with a tag or the controller is waiting for a tag at this antenna (automatic Read/Write mode)
3	R – RUN mode – flashing 1/2s	A flashing LED indicates that the controller is running. When entering the Monitor – the LED stops flashing – the last LED state remains active until the normal program operation continues. Note: the Monitor program stops automatically on missing terminal inputs after about 30 seconds and the normal operation continues.
4	Tx – Transmitting data	The controller sends data via the host port (Serial or Profibus) – the LED is switched ON just before the data is put into the output FIFO buffer and switched OFF when the last character of data is placed in the communication device.
5	Rx – Receiving data	When the controller fetches a complete command from the communication device the LED is switched ON. The led is switched OFF when the complete message is received.

4.1.4.4. Technical Data

The protection class IP65 is only valid when protective caps are fitted to the unused connectors and cables with sealed connectors are used.

Operating Data

Operating frequency	125 kHz
Antenna type	separate, series 77LSxx
No. of antennae	1
Data transfer speed	9600 baud (-SER)
Interfaces	
Interbus-S	IBS-IN 9-pin D type male IBS-OUT, 9-pin D type female
Device addressing	dip-switch or software command

Electrical Data

Supply voltage	24 VDC ±10%
Power consumption	max. 200 mA
Supply connector	D-Sub 15-pin, combined with IO and testterminal
Antenna connection	
Immunity	EN50082-2, Class 3
Emission	EN55022, Class A

Mechanical data

Housing

Housing material	aluminium
Outer dimensions	
77LA02/-IBS	195 × 145 × 78 mm
Weight	
77LA02/-IBS	1.1 kg

Environmental Conditions

measured according to EN60068-2-30

Temperature range	0 … +50 °C (Operating) -10 … +60 °C (Storage)
77LA04/2-ET	-10 … +50 °C (Operating)
Protection class	IP 63 *
Climate, Upper temperature	+55 °C, 93 % rel. humidity
Climate, Lower temperature	+25 °C, 97 % rel. humidity
Duration of climate test	2 cycles, 24 h each

** IP65 when protective caps are fitted to the unused connectors and cables with sealed connectors are used.*

Vibration test IEC 68 Part 2-6

Wave type	Sine form
Frequency band	2 – 500 Hz
Amplitude	2 – 8 Hz 7,53 mm peak./peak. 8 – 200 Hz, 2 g 200 – 500 Hz, 4 g
Sweep speed	1 oct / min
Duration of test	2 h per axis

Shock test (long-term) IEC 68 Part 2-29

Shock form	half sine form
Amplitude	15 g
Duration of shock	6 ms
Number of shocks	4.000 *

Shock test IEC 68 Part 2-27

Shock form	half sine form
Amplitude	30 g
Duration of shock	15 ms
Number of shocks	3 *

** Measured in both directions of the 3 main axis of the test object, oriented orthogonal to each other.*

4.2 The Antennae

The system OISL has been developed with respect to the European regulation EN300330/Class 2. This class is intended for systems with customised antennae.

The regulation requires an approval for the central unit only whereas antennae of class 2 systems are not subject to any approval or permission requirements.

These antennae are passive; in particular any OIS-L antenna is only the inductive part of the systems resonance circuit.

There are two different types:

- AN.76.SR.xx.yy: These antennae are only for compatibility with an older Baumer Ident inductive identification system, 76LA01/xx
- AN.77.SR.xx.yy: These antennae are standard use for the Baumer Ident OISL short range system with central units ZE.77.Sr.xx.yy.

The different antennae have been designed with respect to a wide variety of applications. In general antennae have to be used in an air environment.

For mounting in close proximity to metal please read the appropriate chapter in this system manual. Specifications about reading distances and recommended transponder types are also given in this system manual or in the OIS-L transponder data sheet LD.0306.EN.

Special antennae for mounting directly onto metal are available.

The antenna transmits energy and data signals to and from the data tag. The coil and necessary electronics are enclosed in a sturdy frame housing made of polystyrene. The frame is fully sealed and is protected to an IP67 rating.

On a standard frame antenna the housing accommodates four mounting holes size M6 for screws. A mounting kit (optional) containing brackets and vibration dampeners is available to facilitate the simple and correct mounting of the antenna.

4.2.1 Standard Frame Antennae

Name	Type	Order No.	Remarks
77LS01	AN.77.SR.01.01	DD100014	Standard Tuning
77LS01	AN.77.SR.01.02	DD100008	Tuned for 20 distance mm to steel
77LS02	AN.77.SR.02.01	DD100015	Standard Tuning
77LS03	AN.77.SR.03.01	DD100016	Standard Tuning
77LS04	AN.77.SR.04.01	DD100017	Standard Tuning
77LS09	AN.77.SR.09.01	DD100019	Standard Tuning
77LS09	AN.77.SR.09.02	DD100113	Tuned for 20 distance mm to steel
77LS09	AN.77.SR.09.03	DD100040	Tuned for 20 distance mm to steel, ET Version *

** Extended Temperature*

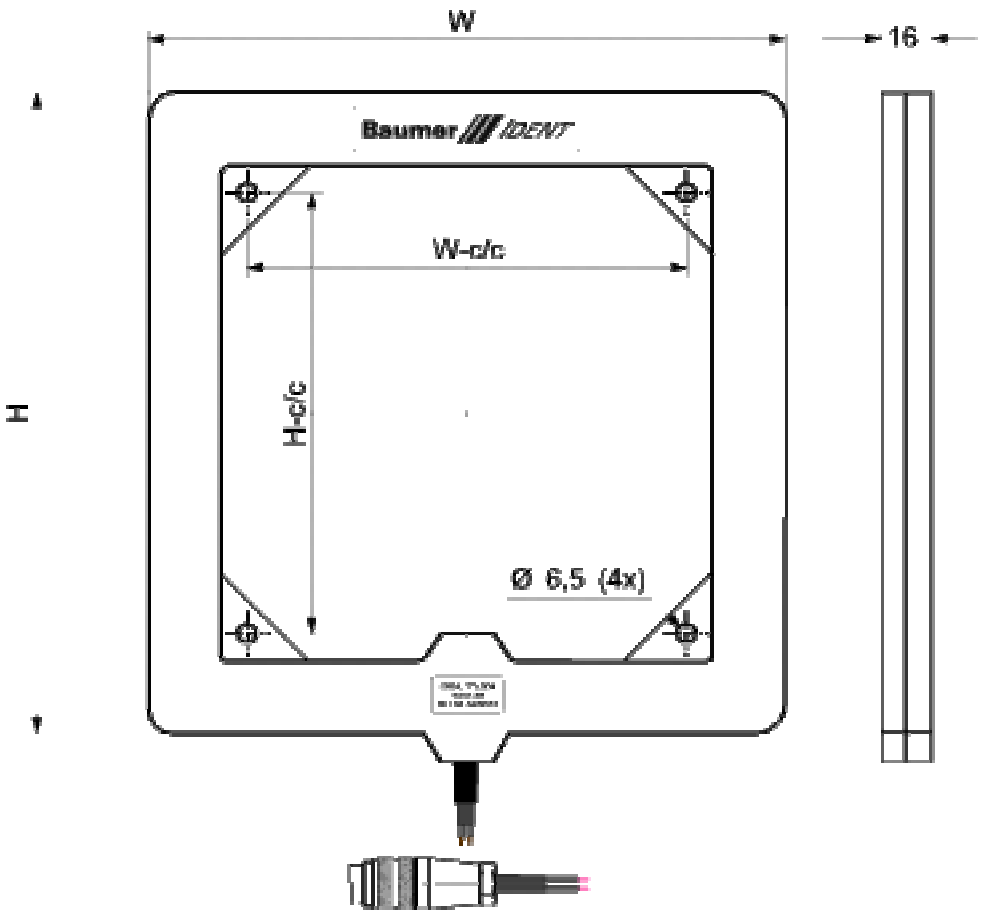

Name	Type	H	W	H-c/c	W-c/c	Weight, kg	Mounting
77LS01	AN.77.SR.01.xx	100	100	85	85	0,5	2 x M4
77LS02	AN.77.SR.02.xx	150	150	81	81	0,8	4 x M6
77LS03	AN.77.SR.03.xx	225	225	156	156	1,2	4 x M6
77LS04	AN.77.SR.04.xx	275	275	206	206	1,5	4 x M6
77LS09	AN.77.SR.09.xx	400	400	331	331	1,8	4 x M6

Frame antennae – mechanical data – All dimensions in mm

4.2.1.1. Common data for all frame antennae

Cable	5 m included
Temperature range	0 … +50 °C (Operating) -10 … +60 °C (Storage)
Housing	Polystrol (PS), dark grey
Protection class	IP65
Tuning	Free air

The –ET version has an extended temperature range of

Temperature range	-10 … +50 °C (Operating) -10 … +80 °C (Storage)

4.2.2 Special Antennae

The different antennae have been designed with respect to a wide variety of applications. In general antennae have to be used in an air environment.

In difference to 77LS05 the antenna 77LS06 has an internal ferrite rod while the housing is identical. Thus, the antenna field has a special shape which influences reading distance an maximum passing speed of a transponder.

The antenna 77LS07 is designed for direct mounting onto metal.

∅

4.2.2.1. Common data for all special antennae

Cable	fixed cable, 5 m length (other lengths on request), min. bending radius: 50 mm, static use
Temperature range	0 … +50 °C (Operating) -10 … +60 °C (Storage)
Protection class	IP67

4.2.2.2. 77LS05

Technical Data

Type	AN.77.SR.05.01
Order code	DD100018
Housing	PVC
Tuning	Free air
Dimensions	Ø M30 × 1,5 × 80 (see drawing below)
Weight	60 g (320 g incl. cable)
Data sheet	LD.0331.EN

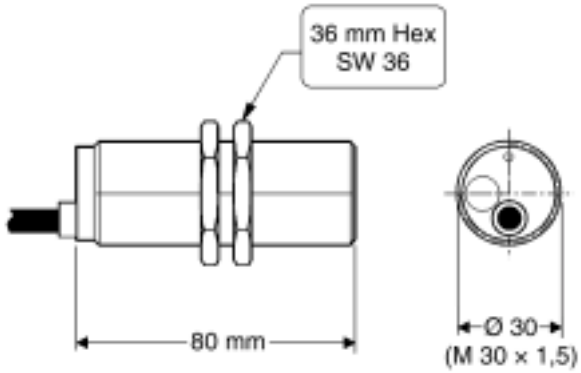

Dimensional drawing of 77LS05 & 77LS06

4.2.2.3. 77LS06

Technical Data

Type	AN.77.SR.06.01
Order code	DD10139
Housing	PVC
Tuning	Free air
Dimensions/ mounting	Ø M30 × 1,5 × 80 (see drawing before)
Weight	80 g (340 g incl. cable)
Data sheet	LD.0332.EN

4.2.2.4. 77LS07

Technical Data

Type	AN.77.SR.07.01
Order code	DD100182
Housing	PVC
Tuning	Free air or direct on metal
Dimensions/ mounting	46 × 30 × 10 mm, 2 × M 3
Weight	230 g (incl. cable)
Data sheet	LD.0333.EN

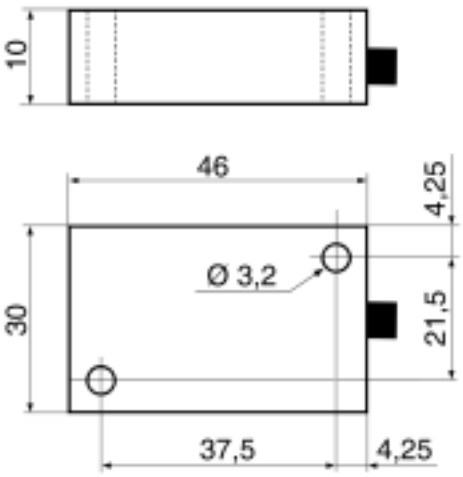

Dimensional drawing of 77LS07

4.2.2.5. 77LS13

Technical Data

Type	AN.77.SR.13.01
Order code	DD100128
Housing	Brass/PBTP
Tuning	Free air
Dimensions/ mounting	M 18 × 1 × 20 mm
Weight	260 g (incl. fixed cable)
Data sheet	LD.0335.EN

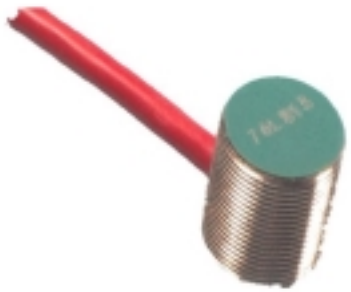

Photo of 77LS13

4.2.2.6. 77LS14

Technical Data

Type	AN.77.SR.14.01
Order code	DD100098
Housing	Brass/PBTP
Tuning	Free air
Dimensions/ mounting	32 × 20 × 10 mm, 2 × M 3
Weight	230 g (incl. fixed cable)
Data sheet	LD.0334.EN

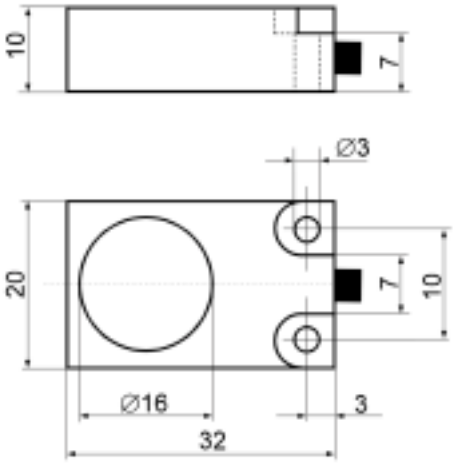

Dimensional drawing of 77LS14

4.3 Data Tags

By offering the opportunity to handle various tag types it is necessary to provide information on how to access read only and read write tags. This overview gives a short overview about different tag types and their special access parameters.

Series 76 tags

Read-only tags – EM series 4001, 4003, and 4103 compatible.

40 Bit Code ID, read only

Type 76LDxxx-yy

- xxx = housing diameter or size specification
- yy = material, housing, ... code

Example

76LD050-01:

- read only tag (series 76)
- 50mm diameter
- Epoxy housing

Series 77 tags

Read/Write tags – 128 Bit, 1536 Bit user memory space

Type 77LDxxx-syy

- xxx = housing diameter or size specification
- s = capacity specification 1 = 2 kBit Tag 2 = 256Bit Tag
- yy = material, housing, ... code

Example

77LD100-101

- 2kBit Read write tag
- 100mm diameter
- PVC housing

77LD030-201:

- 256 Bit Read/Write tag
- 30mm diameter
- EPOXY housing

In the following chapters the 'xxx' and 'yy', etc. abbreviations are replacements for the specific tag type specifications (housing, type, material, diameter, size, etc.).

4.3.1 Accessing Data Tags

4.3.1.1. Basic Definitions

The memories of the various read write tag types (77LDxxx) are physically organized in pages. One page contains 4 Bytes or 32 Bits of data. Only a page can be accessed as a smallest unit. The Read/Write data tag's memory size allows to access 4 to 48 pages (16 to 192 Bytes, 128 to 1536Bit) of user pages depending on the specific tag type. Byte access is supported only on the base 'page read, modify byte, page write back'. Read-only tags (76LDxxx) are not organized in pages. The memory contains a total net size of 5 Bytes (40 bits) of fixed sized programmed data. The memory size including extra synchronization bits and parity bits is 64 bits.

4.3.1.2. Read Only Tags

The 76LDxxx read only tag family offers a memory size of 64 bits. These bits are transmitted sequentially while the tag is in the active antenna field. 24 bits are used as the message frame with the SYNC-Header, parity bits and stop bit. 40 bits are used as the UNIQUE ID. Only these 40 bits are delivered to the user.

The logical memory map on the data tag looks like the following:

1	ID Byte [MSB]	40Bit unique. (Read only) [64 Bits with sync bits and parity bits]
2	ID Byte	
3	ID Byte	
4	ID Byte	
5	ID Byte [LSB]	

Tag data logical memory map

The TAG-ID has a length of 40 bits packed into 5 bytes. Each byte is transmitted as 2 hexadecimal ASCII characters '0'…'9', 'A'…'F'. The higher order nibble is sent first following the lower order nibble.

With read-only tags there is no need to set any page numbers since the tag has a fixed code length and is not divided into pages.

4.3.1.3. 256 Bit Read/Write Tag Type

When using the Read/Write data tag 77LDxxx-2yy it is important to state which page you want to read from. The 256 Bit type contains 8 pages, each having 32 Bit. The first page contains the unique serial number of the tag, the next three pages are reserved and the remaining 4 pages are available for user data.

Optional read only configuration

A specialty of this tag type is that it can mimic a read only tag. Using this feature PREDEFINED or multiple READ ONLY TAGS with the same ID may be produced that are completely compatible to the Series 76 tags. Series 77LDxxx-2yy data tags may be used in a mixed environment with 76LDxxx tags.

This tag function must be set-up in factory or requires special controllers and controller software at the customer site.

The data on the tag has the following layout

Page #	Contents			Access
0	Serial number	32 Bit unique. (Read only)		Public
1	*Reserved*	*No access available to this 3 pages*		*Not public*
2	*Reserved*			
3	*Reserved*			
4	User data 1	Read and write	Option: 64 Bit Read only memory layout for RO operation	Public
5	User data 2	-"-		Public
6	User data 3	-"-		Public
7	User data 4	-"-		Public

Tag data logical memory map

The Read Only Memory Option – Bit Map

1	*1*	*1*	*1*	*1*	*1*	*1*	*1*	*1*	Sync-Headerbits	Page4
D03	D02	D01	D00	LP0	Digit 1	Line Parity 1	Page 4		8 bit version custumer ID	
D13	D12	D11	D10	LP1	Digit 2	Line Parity 2	Page 4			
D23	D22	D21	D20	LP2	Digit 3	Line Parity 3	Page 4			
D33	D32	D31	D30	LP3	Digit 4	Line Parity 4	Page 4		32 bit unique identifier allowing ~4 billion of combinations	
D43	D42	D41	D40	LP4	Digit 5	Line Parity 5	Page 4 / Page5			
D53	D52	D51	D50	LP5	Digit 6	Line Parity 6	Page5			
D63	D62	D61	D60	LP6	Digit 7	Line Parity 7	Page5			
D73	D72	D71	D70	LP7	Digit 8	Line Parity 8	Page5			
D83	D82	D81	D80	LP8	Digit 9	Line Parity 9	Page5			
D93	D92	D91	D90	LP9	Digit 10	Line Parity 10	Page5			
CP3	CP2	CP1	CP0		4 Bit	Column Parity	Page5			
				Line Parity						
0		Stop bit		Page5						

The parity is calculated as even parity.

4.3.1.4. 2kBit Read/Write Tag Type

The 2kBit data tag is operating functionally similar to the 256 Bit tag introduced above. The main differences are the larger amount of pages that can be read by an atomic command (up to 16 pages max.) and different page start addresses of user data area and its greater size.

The memory of the 2kBit data tag 77LDxxx-1yy contains 64 pages, each having 32 Bit. The first page contains the unique serial number of the tag, the next seven pages are reserved and not accessable. Pages 8 to 15 are reserved and are accessable with Long Range Reader Devices only The remaining 48 pages are available for user data without any restriction.

The data on the tag has the following layout

Page #	Contents	
0	Serial number	32 Bit unique. (Read only)
1	Reserved	*No access available to 7 pages*
…	-“-	
7	-“-	
8	-“-	*No access available to 8 pages for short range reader* *Standard: no access with long range reader.* *Access with long range reader requires special firmware.*
…	-“-	
15	Reserved	
16	User data 1 page	Read and write
…	-“-	-“-
64	User data 48 page	-“-

Tag data logical memory map

5 Hints on Installation and System Design

5.1 Basic considerations

We would all like to ensure that all of the efforts that have gone into planning and designing a new system will enable it to be installed problem free in an efficient and reliable manner. Enabling the new system to meet all of the planned project criteria. When selecting the correct OIS-L components for an application, there are a few more items to be considered:

The environment

- Is it free from metal around antenna and data tag
- Electrical noise close to the antenna -or data tag
- Humidity
- Temperature
- Aggressive media
- Vibrations, shock

Required distance between antenna and data tag

Writing data to the tag

- Number of write cycles per time unit
- Static
- Dynamic

Passing speed required

Amount of data to be transmitted

Max. out of centre deviation (± mm)

5.2 The antenna lobe

The antenna field runs concentric with the coil windings. Hence the field is stronger towards the centre of the antenna, where the fields from all four sides coincide. A certain field also occurs on the outside of the antenna frame. Thisis the reason why the field close to the antenna surface is larger than the actual coil winding itself. The following graph shows a typical antenna field form and spread when both the antenna and data tag are free from metal influences.

5.3 Useful antenna field

It is important to distinguish between static and dynamic applications. The tag needs to be within the active field for approximately 80-150 ms (depending on tag type for one page or read only Code-ID) to guarantee a correct code reading or data programming. The higher up on the lobar antenna field form the tag passes the antenna, the shorter the useful field gets resulting in a reduction of the max. passing speed possible.

The reading range achievable depends on different factors, e.g. antenna type, data tag position, and interferences in the environment. Typical values achievable are listed in the following tables under conditions as stated in the respective table.

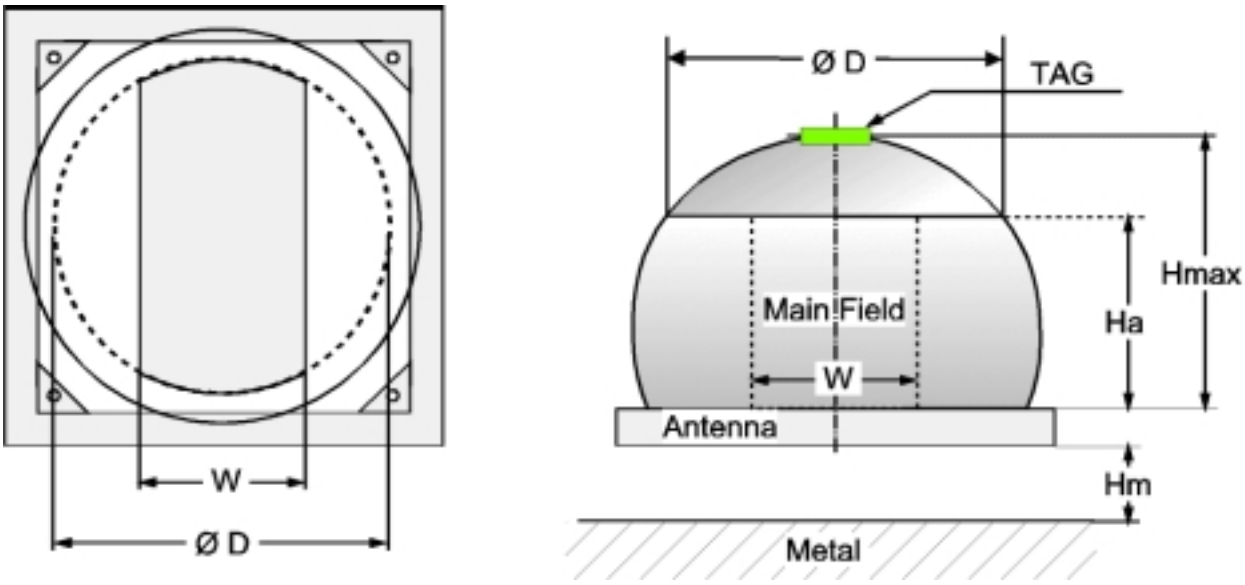

Antenna field – Communication – range definition for static and dynamic application

The various reference numbers in the previous graph have the following meanings:

Hmax	This is the maximum distance possible between the antenna and the data tag where the field strength is high enough to power up the data tag. Since the diameter at this point is close to zero, it can only be used for static applications.
Ha	This is the main field and should be used for dynamic applications. The max diameter Ø D indicates the upper limit for dynamic applications. For maximum allowable passing speeds please refer to the appropriate manual section.
Hm	Defines the distance between a metal surface and the antenna. For optimal system performance it is essential to keep a minimum distance to any metal surface.
W	The W stands for the maximum allowable ± offset from the centreline, having just a minor influence on the passing speed in dynamic applications.
Ø D	The maximum diameter Ø D indicates the upper limit for dynamic applications.

Note

The tags of the same size e.g. 77LD03-xx have the same communication distance; hence not all variants are displayed in the table.

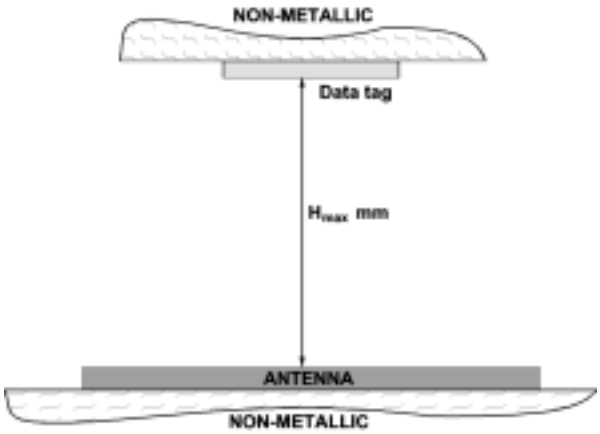

Set-up to establish Read/Write distances

5.3.1 Width ∅D and W and reading range at distance Ha

ØD, W [mm]							
Data tag Antenna	**76LD020**	**76LD030**	**76LD050**	**76LD060**	**76LD100**	**76LD500**	**Reader**
77LS01	100, 50	100, 90	100, 95	100, 100	100, 140 [1)]	100, 95	**77LA04/x**
77LS02	150, 100	150, 130	150, 125	150, 140	150, 145	150, 125	**77LA04/x**
77LS03	225, 170	225, 170	225, 190	225, 200	225, 220	225, 190	**77LA04/x**
77LS04	275, 160	275, 190	275, 220	275, 230	275, 265	275, 220	**77LA04/x**
77LS05	50, 30	50, 30	50, 50	50, 60 [1)]	50, 80 [1)]	50, 50	**77LA04/x**
77LS09	*	400, 335	400, 375	400, 380	400, 395	400, 375	**77LA04/x**

Dimensions of communication field, mm at distance Ha for read-only tags of series 76

ØD, W [mm]						
Data tag Antenna	**77LD020**	**77LD030**	**77LD050**	**77LD100**	**77LD500**	**Reader**
77LS01	100, 50	100, 90	100, 90	100, 140 [1)]	100, 90	**77LA04/x**
77LS02	150, 100	150, 120	150, 125	150, 145	150, 125	**77LA04/x**
77LS03	225, 170	225, 170	225, 190	225, 220	225, 190	**77LA04/x**
77LS04	275, 160	275, 180	275, 220	275, 265	275, 220	**77LA04/x**
77LS05	50, 30	50, 30	50, 50	50, 80 [1)]	50, 50	**77LA04/x**
77LS09	*	400, 330	400, 355	400, 395	400, 355	**77LA04/x**

Dimensions of communication field, mm at distance Ha for Read/Write tags of series 77

[1)] if the tag is larger than the antenna – W is determined by the tag size!

5.3.2 Operational Read/Write range Ha

Ha[mm]							
Data tag Antenna	**76LD020**	**76LD030**	**76LD050**	**76LD060**	**76LD100**	**76LD500**	**Reader**
77LS01	50	70	100	110	130	100	**77LA04/x**
77LS02	60	80	120	130	170	130	**77LA04/x**
77LS03	70	110	150	170	210	160	**77LA04/x**
77LS04	60	120	170	180	220	180	**77LA04/x**
77LS05	30	40	60	60	70	60	**77LA04/x**
77LS09	*	120	180	210	290	190	**77LA04/x**

Typical communication distance for read-only tags of series 76

* Combination of data tag and antenna not recommended!

Ha[mm]						
Data tag Antenna	**77LD020**	**77LD030**	**77LD050**	**77LD100**	**77LD500**	**Reader**
77LS01	35	60	90	130	100	**77LA04/x**
77LS02	50	70	100	150	150	**77LA04/x**
77LS03	45	90	150	200	170	**77LA04/x**
77LS04	35	100	170	250	190	**77LA04/x**
77LS05	30	50	70	100	70	**77LA04/x**
77LS09	*	100	170	290	200	**77LA04/x**

Typical communication distance for Read/Write tags of series 77

5.3.3 Peak Read/Write range Hmax

Hmax[mm]							
Data tag Antenna	**76LD020**	**76LD030**	**76LD050**	**76LD060**	**76LD100**	**76LD500**	**Reader**
77LS01	70	100	140	150	190	150	**77LA04/x**
77LS02	90	130	170	190	250	180	**77LA04/x**
77LS03	100	160	220	240	300	230	**77LA04/x**
77LS04	90	170	240	260	320	250	**77LA04/x**
77LS05	40	60	80	90	100	80	**77LA04/x**
77LS09	*	170	260	300	410	270	**77LA04/x**

Maximum communication distance for read-only tags of series 76

Hmax[mm]						
Data tag Antenna	**77LD020**	**77LD030**	**77LD050**	**77LD100**	**77LD500**	**Reader**
77LS01	50	90	130	190	160	**77LA04/x**
77LS02	75	100	150	220	220	**77LA04/x**
77LS03	75	130	220	260	250	**77LA04/x**
77LS04	50	150	240	310	280	**77LA04/x**
77LS05	40	60	80	120	80	**77LA04/x**
77LS09	*	160	260	380	310	**77LA04/x**

Maximum communication distance for Read/Write tags of series 77

* Combination of data tag and antenna not recommended!

5.3.4 Static applications

From the above statement it is evident that the upper part of the field may only be used in static applications. Local environmental influences may have an adverse effect on the achievable Read/Write distances. It is therefore vitally important to measure the distances on site with the equipment to be used, to avoid problems in the field.

A particular problem to look out for when considering an installation, can be caused by the close proximity to strong fields generated from AC-servos.

Note! Watch out for possible disturbances in the area surrounding the antenna.

5.3.5 Dynamic applications

For dynamic applications For dynamic applications only the lower section of the lobar field should be used. This is demonstrated in the graph given on the previous page.

A second important factor to consider in dynamic applications is the off-centre deviation. The corridor W in the graph indicates the maximum deviation +/- from the antenna centre line. The field varies slightly with the data tag size. For practical purposes a value between 0,4 and 0,5 × Ø D can be used as a start value. If the data tag extends beyond these values, the contact length with the active field gets shorter, reducing the achievable passing speed.

Do not forget to consider the deviation from the antenna's centre line!

5.4 Calculating the Passing Speed

The achievable passing speed depends on the size of the antenna, data tag and the number of Bytes to be transferred. The contact time for reading the fixed-code serial number i.e. the time the data tag is required to be within the useful area of the antenna field is about 140 ms. This gives a simple rule-of-thumb to calculate the maximum passing speed for a particular antenna/data tag combination.

Desired passing speed in mm/ms × 100 = Length of useful antenna field required in mm.

Example

passing speed = 30m/min (100 ft/min)

This equals 0.5 mm/ms × 100 = 50 mm useful antenna field length.

100 ft/min = 0.02"/msec. × 100 = 2" useful antenna field length

The tables before show typical values for different antennae and different tags used. The values have been established from measurements from several tags and the average value has been taken.

Temperature variations and production tolerances may produce values that differ from the above by ±20%. Hence we recommend to perform tests with the equipment on the site in question, to establish the Read/Write distances and passing speeds achievable in the actual application.

Note! Local conditions may affect the Read/Write distances achievable. Production tolerances and temperature changes may also cause a deviation from the values in the table!

5.4.1 Communication: Reader – Antenna – Data Tag

5.4.1.1. Read Only Tag – 76LDxxx

The read only tag has a fixed timeing therefore three constant describe the typical tag-reporting rates to be expected

Read:

80 ms: reading of tag in antenna field, continuously.

117 ms: Tag enters antenna field newly, 1 time then 80ms continuously

150 ms: worst case under influence of disturbance

5.4.1.2. General formulas for Read / Write Tag Types

256Bit Tag: Type family 77LDxxx-2yy

Pages: 0, 4...7,

Number of Pages: 1..4

Read:

T_{read} [ms] = 60+ 36 * 'Number of Pages'

Example:
2 pages to read
T_{read} [ms] = 60+ 36 * 2 = 132ms

Write:

T_{write} [ms] = 65 + 39 * 'Number of Pages'

Example:
3 pages to write
T_{write} [ms] = 65 + 39 * 3 = 182ms

2kBit Tag: Type family 77LDxxx-1yy

Pages: 0, 16,..,63

Number of Pages: 1..15 or 0 for 16 pages

Note: 16 possible when using 0 as number of pages in the standard host commands using Serial, Profibus-DP or Interbus-S protocols.

Read:

Number of Pages < 16

T_{read} [ms] = 81+ 44 * 'Number of Pages'

Number of Pages = 16

T_{read} [ms] = 81+ 44 * 16 = 785ms

Example:
11 pages to read
T_{read} [ms] = 81+ 44 * 11 = 565ms

Write:

Number of Pages < 16

T_{write} [ms] = 86 + 48 * 'Number of Pages'

Number of Pages = 16

T_{write} [ms] = 86 + 48 * 16

Example:
9 pages to write
T_{write} [ms] = 86 + 48 * 9 = 518ms

5.4.2 Communication: Reader – Host (PC or PLC)

The communication time required between the central unit and the host depends mainly on three factors:

- Type of communication
- Cycle time of the host
- Software used

The communication can be split into three main steps as follows:

1) A command is prepared and executed in the host and transmitted to the central unit.

2) The central unit performs the instructions i.e. writes data to and/or reads data from the tag. The data exchange between central unit and tag starts as soon as the tag has entered the active antenna field. The data received from the tag is evaluated and verified and subsequently stored in the memory of the central unit

3) The host polls the central unit and the code stored is transmitted to the host.

5.4.2.1. Serial communication time

The communication between the host, the central unit and tag is asynchronous at a standard transfer rate of 9.600 Bps. This is the base for calculating the amount of data that may be transferred during the time the tag is within the active field of the antenna. For the serial and Interbus-S controller versions the transfertime via the serial link must be added to any read / write execution times. The Profibus-DP versions provide a faster internal transfer rate and must be handled differently.

Read command:

T_{read_comm} [ms] = $T_{rhost} + T_{roisl}$ =

(T_{rhost}) 10 * 1,1 +
(T_{roisl}) (9 + 4 * 2 * <number of pages>) * 1,1

Example: read 16 pages

T_{read_comm} [ms] = [10 + (9 + 8 * 16)] * 1,1
= <u>161,7[ms]</u>

Write command:

T_{write_comm} [ms] = $T_{whost} + T_{woisl}$ =

(T_{whost}) (10 + 4 * 2 * <number of pages>) * 1,1 +
(T_{woisl}) 9 * 1,1

Example: write 15 pages

T_{write_comm} [ms] = [(10 + 8 * 15) + 9] * 1,1
= <u>152,9 ms</u>

5.4.3 Correlation of Passing Speed vs. Amount of Read/Write Data

It isn't possible to give a general formula for the correlation of speed vs amount of data to handle due to the fact that too many different parameters are influencing this calculation. It is only possible to show the graphical representation of the correlation for typical combinations of tags, antennae to help the user to estimate the key limits of this scheme. The following information only applies to data tags within the field with the boundary W_{short} and W_{long} of the main field H_a

5.4.3.1. Component selection

Selecting the best antenna, tag combination for a given application is executed as an iterative process. Various different parameters must be varied to get a proper component match to the specific application and environmental conditions.

The following steps must be taken to determine the required parameters.

1. Select the antenna for the required read/write distance antenna – tag from tables:

   ‚Operational Read/Write range Ha'

2. Check the antenna selected for matching against the table:

   ‚Width W of reading range at distance Ha'

3. As result the Tag-Type and the Antenna are selected.

4. The given antenna size ∅D and the Tag diameter give the available physical reading length as result.

The parameter ∅D can be determined from table:

‚Width W of reading range at distance Ha'

Now all parameters referring the available length of the read/write area $\mathbf{S_{proc_len}}$ are determined.

5. With the next step the available time for communication with the data tags is calculated from the application specifications.

The user must determine the number of pages to transfer between antenna and tag.

With the parameters tag type and number of pages to transfer over all, the user can calculate the amount of time $\mathbf{T_{proc_len}}$ required to proceed.

6 The best case passing speed $\mathbf{v_{opt_proceed}}$ is calculated (using the general formula v = s/t):

$$\mathbf{v_{opt_proceed} = S_{proc_len} / T_{proc_len}}$$

Example:

The following conditions are given by the application specifications:

Controller 77LA04/2-SER with one antenna.

Required read range ~50mm (distance tag / antenna), minimum distance 30mm, max. distance 70mm.

Data tag type read only – 76LDxxx

Step 1 (Antenna/Tag) Select Antenna/Tag pairs with Ha > 70mm

Antennae 77LS02..77LS04 are matching

Data tag 76LD030 or 76LD050 are matching

Start with 77LS02 and 76LD030

Step 2 (Antenna / Tag verification)

From the table **W = 120mm** is taken.

Step 3 W should be OK this selection seems acceptable

Step 4 Check read width W

The antenna 77LS02 has an effective coil diameter of 120mm (150mm – 2*15mm), using a data tag with an effective coil diameter of 30mm. The estimated resulting field size is:

W = S_{proc_len} = 150mm – 30mm = <u>120mm</u>.

See the following drawing for details.

.

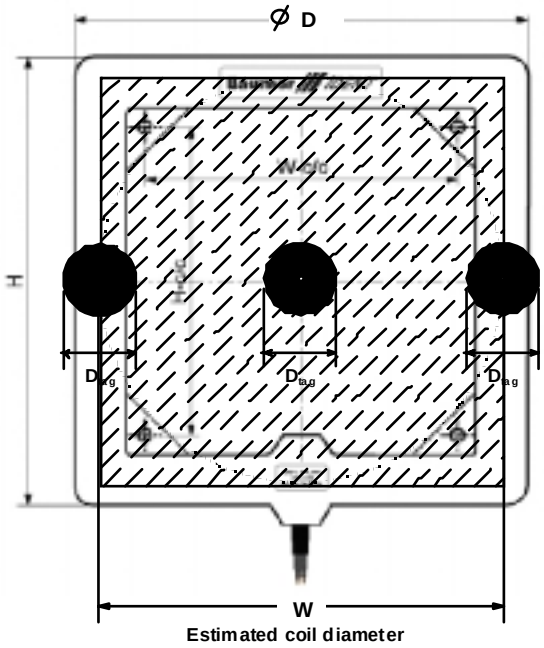

Estimate antenna reading area using given antenna diameter and tag diameter.

Step 5 Estimate the time required for Read / Write operations:

Read only tag Tag 76LD030 read time is 117ms when the tag enters the field. The worst case is typically 150ms. To be on the save side 150ms is taken for the following calculation.

$$T_{read} = T_{proc_len} = \underline{150ms}.$$

Step 6: Determine the maximum tag passing speed.

$$v_{opt_proceed} = S_{proc_len} / T_{proc_len} = W / T_{read} = \\ = 120mm/150ms = 120/150\ m/s \\ = \underline{0{,}8m/s} = \underline{48m/min}$$

If this doesn't meet the application requirement (speed is too low) then the calculation with the next larger antenna / data tag pair, i.e. 77LS03 antenna and 76LD050 data tag must be repeated with step 1.

5.5 Installation Guidelines

In an ideal situation, the system is free from environmental influences, proximity to metal and electrical noise. An industrial environment is normally far from being the ideal situation.

For that reason the installation can only be done by a technician, who has enough know ledge about the OIS-L system. Baumer Ident offers support and training in Germany.

The nearness of the antenna and/or data tag to a metal surface has more than one adverse effect on system performance.

The distance between two adjacent antennae and / or two tags plays an important role for optimal system function. Guidelines for min. distances are given in a following section.

For optimum performance please ensure that the antenna is mounted as follows:

- No metal closer than 100 mm to the antenna in any direction (Hx and Hm)
- Data tag should be arranged as parallel as possible to the antenna surface

The writing/reading range achievable depends on various factors, e.g. data tag type and position, environmental interference. For accurate values, tests should be carried out on-site. Typical values for certain antenna/tag combinations are listed in the subsequent section

All values are valid for a metal free environment at an ambient temperature of 20 °C. Due to component and production tolerances as well as temperature influences, a variance of ±20 % is allowed.

A set of mounting brackets is available and can be ordered separately.

When the tags are flush-mounted in iron or aluminium, the reading distance is substantially reduced due to the loss of energy through eddy currents and other losses.

By applying certain application techniques, it is possible to obtain reading distances of 50% as compared to the readings in air.

5.5.1 Metal-free environment

The closeness of the antenna and/or data tag to a metal surface has more than one adverse effect on the system performance.

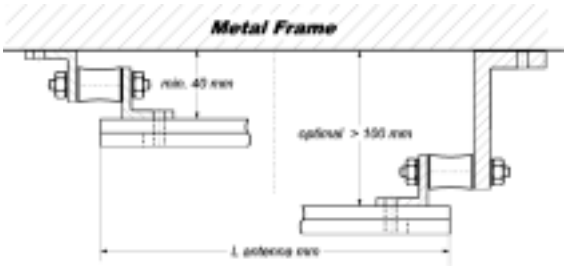

Installation Diagram

A major effect on the system is caused when a metal surface close to the coil detunes the frequency from its nominal value of 125 kHz. An iron surface will normally increase the frequency by approximately 6 kHz. An aluminium surface will increase the frequency even more; in the worst case it will cause the system to fail.

A second negative influence is the loss of energy. The metal in the form of Eddy currents will absorb a certain amount of the energy transmitted from the antenna. Hence, it is important to strictly adhere to the mounting recommendations provided in the user manual.

If mounting is required on or close to metal parts, special antennae and data tags are needed. Baumer Ident has extensive experience in this field and is therefore able to offer a solution.

The following graph shows the typical drop in system performance for any combination antenna / data tag when the antenna is mounted in close proximity to metal (Fig. 5-5). The reduction in performance is given as the distance to metal in relation to the size of the antenna loop, expressed as percentage.

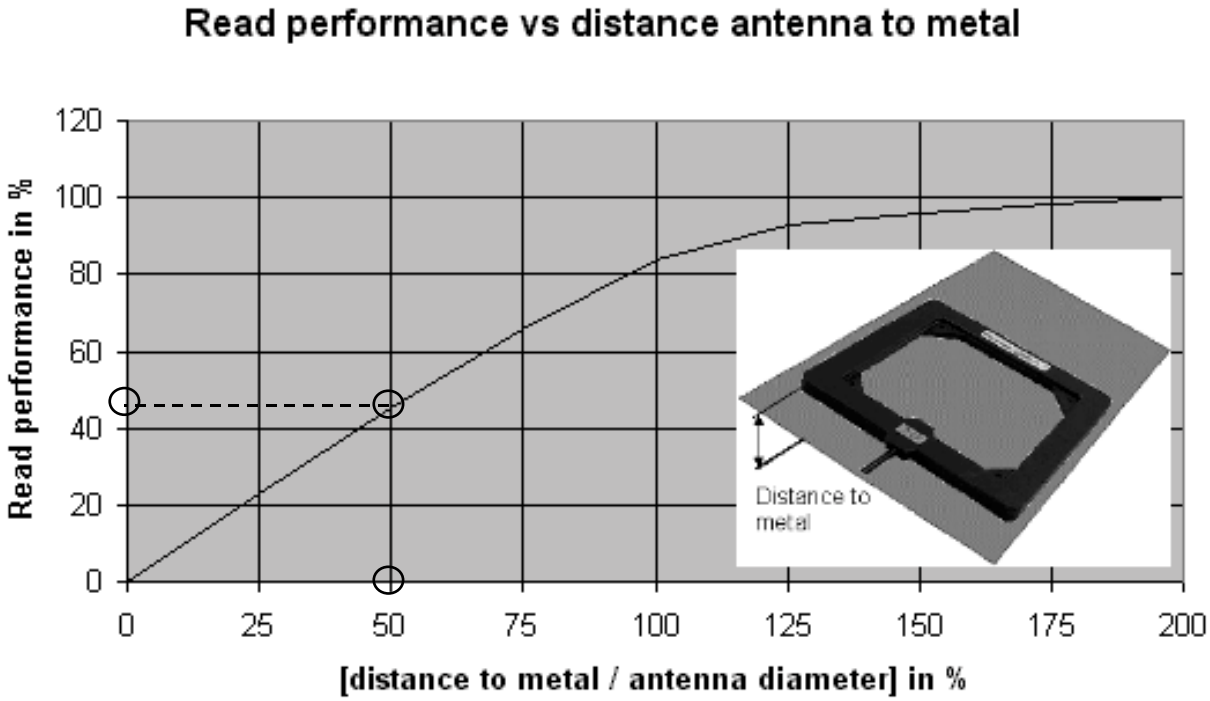

Influence on system performance by nearness to metal – distance antenna - Metal in % of antenna loop Ø

Example

The antenna 77LS09 has an antenna loop (Ø D) of 340 mm. If the antenna is mounted at a distance of 170 mm to a metal surface (=50% of loop) the system performance will be reduced to 45% of the performance it has in a metal free environment.

In order to reduce this great performance loss, antennae especially tuned to metall are available. This special antennae guarantee a performance of better than 90% of a standard antenna without influence of metal.

In the previous sections the various negative influences on system performance have been discussed. To recap, the main points are as follows:

- Mounting of the antenna and tag close to metal is not recommended. If certain critical values are not adhered to, the system performance will not only drop considerably - it can fail completely.
- Flush mounting of the antenna and/or tag in a metal environment requires special attention. There must be a metal free area in all directions (distance values for antennae, pls. refer to Fig. 5-5). For the tags it is normally sufficient to have a distance of 50 mm to metal in any direction.
- No metal brackets (or any other metal object) should be within the active field, since this will distort the field lines and reduce system performance.

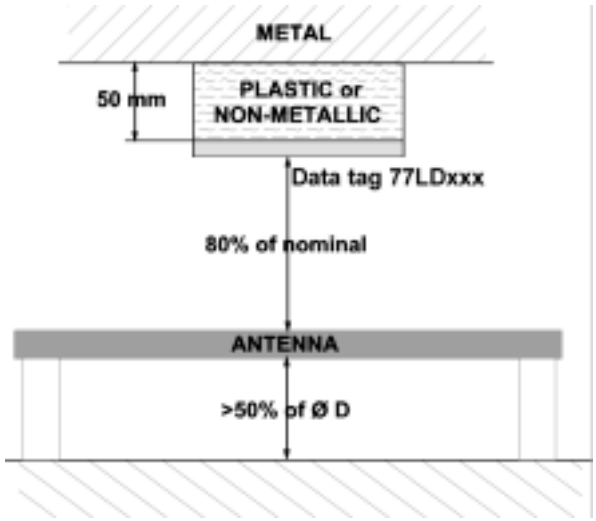

Performance with tag and antenna close to metal

5.5.2 Mounting examples

The diagrams below show a typical mounting used in industrial applications. Indicated is the recommended minimum distances between two antennae, as well as between two adjacent tags.

Should it become necessary to mount the antennae closer to each other than Shown in Fig. 5-6 an electronic interlock has to be arranged to prevent one antenna from "damping " the other.

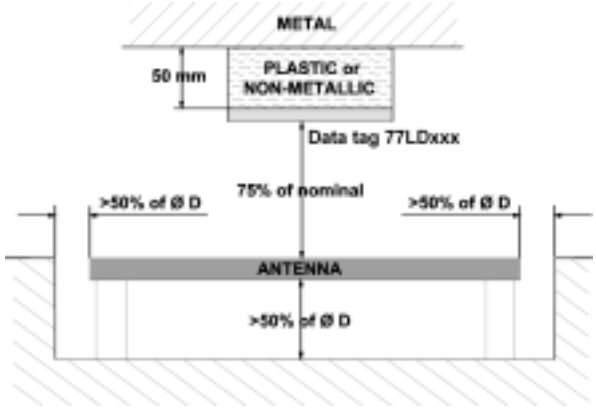

Performance with metal on three sides of antenna

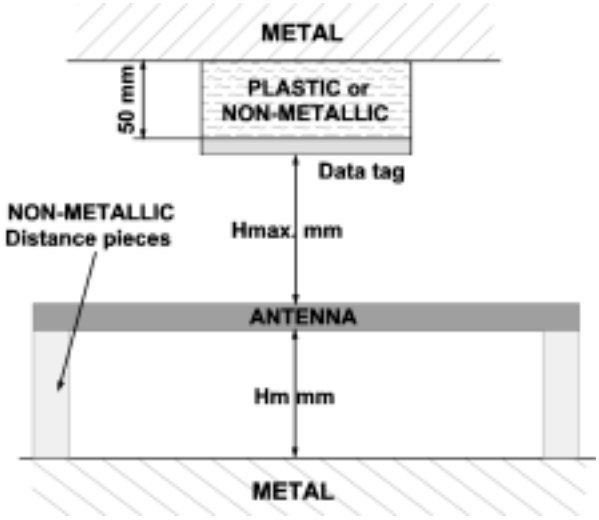

Antenna mounted close to metal

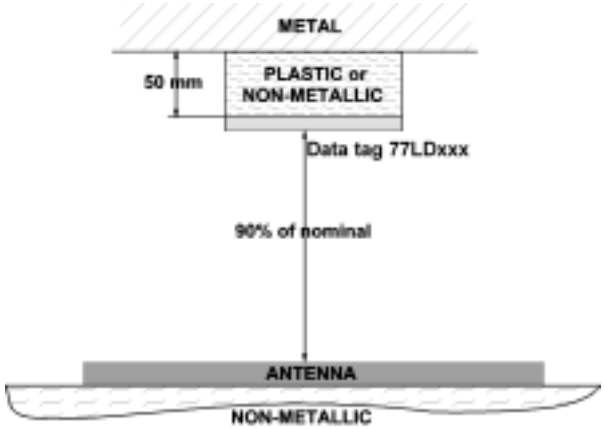

System performance with tag close to metal

Important Note!

The more metal free area there is around the antenna and tag, the betterthe system performance. Should the antenna be mounted at a distance of less than 20% of the loop diameter Ø D, there is a risk that the system will fail.

Generally it is less detrimental to system performance if the tag is closer to the metal than recommended.

5.5.3 Distance between antennae or tags

Should it become necessary to mount the antennae closer to each other than shown in Fig. 5-6 an electronic interlock has to be arranged to prevent one antenna from "killing" the other.

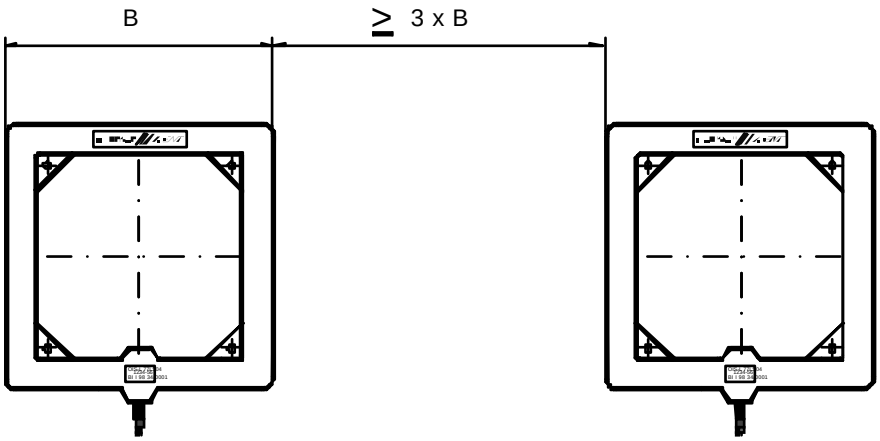

Minimum distance between two antennae driven by different central units.

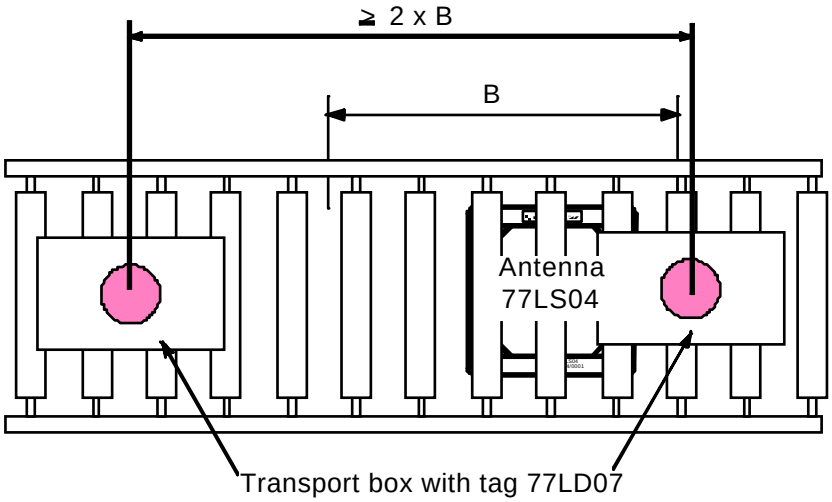

Minimum distance between two data tags – Communication with the tags through metal transport reels

5.6 EMC Guidelines

EMC stands for **E**lectro**M**agnetic **C**ompatibility.

The EMC guidelines are constantly being updated and more stringent demands are applied to electronic components and equipment.

A considerable increase in the use of electronic equipment and appliances has taken place in recent years. The required performance of the equipment increases and the physical size of the equipment decreases. The component power consumption is reduced and the communication and processing speeds increase.

The more units that are in operation, the higher the risk that they will influence each other. Hence, the reason for the stricter rules that constantly challenge the electronic companies.

Note! It is the responsibility of the general contractor of the total system to adhere to the EMC guidelines for the total installation.

Measurements taken at the planning and installation stage will prevent expensive system changes at a later stage

Specific regional or country regulations and legal requirements must not be neglected

5.6.1 General

With EMC we understand the ability of electric or electronic equipment to function without any problems in an electromagnetic environment. At the same time, the equipment is not allowed to influence or interfere with other equipment in the vicinity, beyond certain limits.

EMC can be separated into three general types:

Self-immunity

The immunity against internal (own) electrical disturbances

General immunity

The immunity against foreign electromagnetic disturbances

Emission

The degree of radiation and interference onto other equipment. EMC tests are performed according to all three types. All Baumer Ident equipment undergoes these rigorous tests.

Since the Baumer Ident equipment is only part of a total system, it is vital for the system performance that all system components adhere to these EMC guidelines.

5.6.2 Shielding concept

In the OIS-L system the data exchange between the central unit and the host is performed at a rate of at least 9600 Baud via an RS 422 interface. When Profibus DP is used, the rate is considerably higher. The maximum cable length at 9600 Baud is 1000 meters. This necessitates good shielding of the data cables.

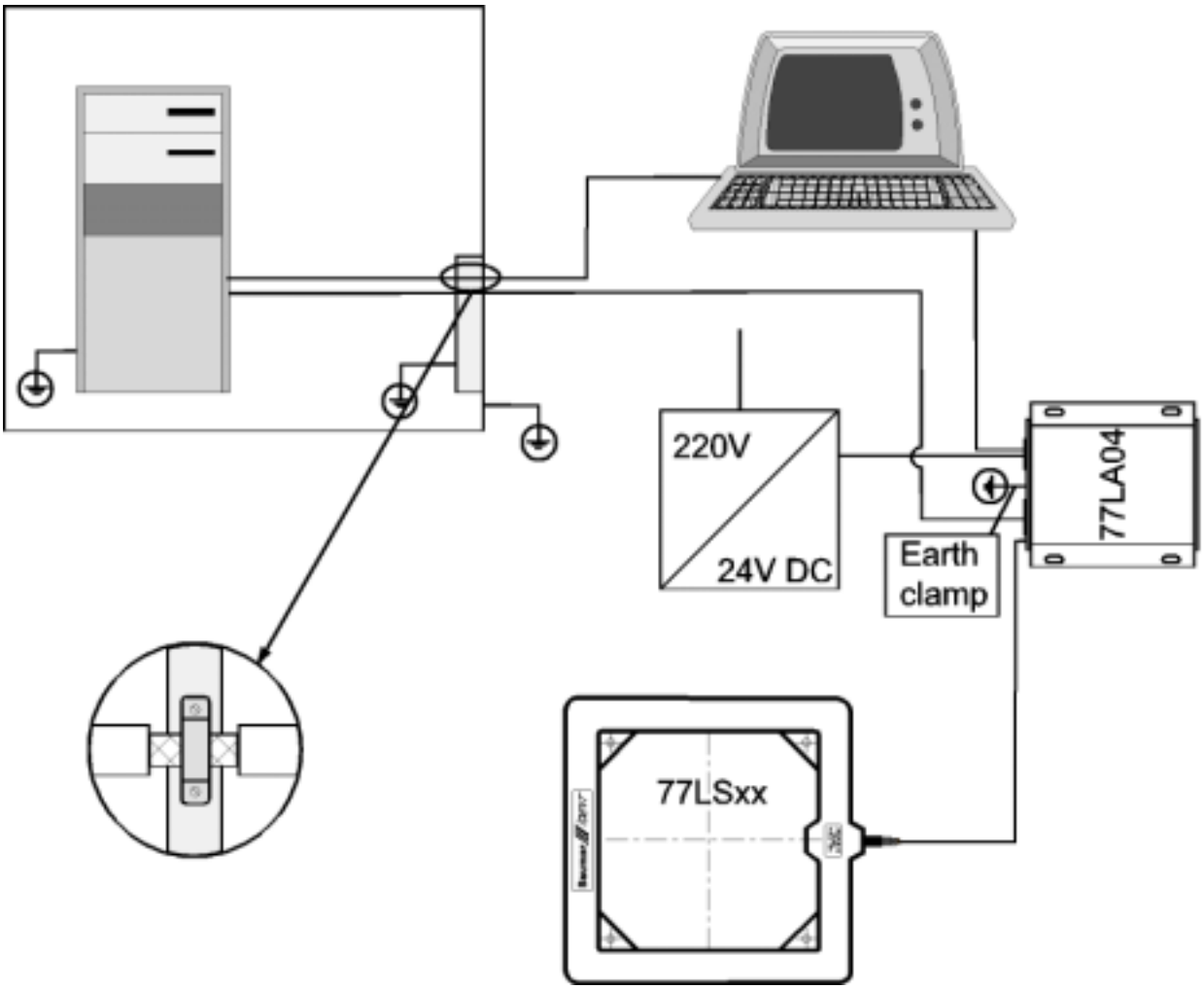

shielding

6 FAQ's

6.1 Digital Input / Trigger

To force a continuous operation with a trigger function, a 15pole adapter must be used. This sets the dedicated trigger input to an active state.

For Input 1 active

Connect Pin1-Pin14 or Pin9-Pin14 and Pin6-Pin2 with a little isolated wire

For Input 2 active

Connect Pin1-Pin13 or Pin9-Pin13 and Pin5-Pin2 with a little isolated wire

6.2 Miscellaneous

What happens if there is a polarisation error to the power supply?

Nothing. The unit is protected against such errors. The only chance to kill the central unit is to feed mains voltage or DC Voltage above the limit of 36VDC into it. So don't even try it!

What happens if there are spikes or drops on the power supply?

Normally nothing. The galvanically isolated DC-DC-Converters inside can stand an input voltage between 18 and 36 VDC. Spikes from usual electrostatic discharges should also do no harm onto this connector.

The digital outputs are also protected against misuse.

But be careful with overvoltages into the host interfaces.