CAMP ROCKER

Bluetooth Speaker Lantern

BRUNTON

OPERATION INSTRUCTION MANUAL

Model : LT-003
(FCC ID : PNXLT-0331)

READ ALL INSTRUCTIONS BEFORE FIRST USE
KEEP THIS MANUAL FOR REFERENCE.

⚠ CAUTION

RISK OF EXPLOSION IF BATTERY IS REPLACED BY AN INCORRECT TYPE. DISPOSE OF USED BATTERIES ACCORDING TO THE INSTRUCTIONS.

IMPORTANT!

Changes or modifications not expressly approved by the party responsible for compliance could void the user's authority to operate the equipment. This equipment has been tested and found to comply with the limits for a Class B digital device, pursuant to Part 15 of the FCC Rules. These limits are designed to provide reasonable protection against harmful interference in residential installation. This equipment generates, uses and can radiate radio frequency energy and, if not installed and used in accordance with the instructions may cause harmful interference to radio communications. However, there is no guarantee that interference will not occur in a particular installation. If this equipment does cause harmful interference to radio or television reception, which can be determined by turning the equipment off and on, the user is encouraged to try to correct the interference by one or more of the following measures:

- Reorient or relocate the receiving antenna.
- Increase the separation between the equipment and receiver.
- Connect the equipment into an outlet on a circuit different from that to which the receiver is connected.
- Consult the dealer or an experienced radio/TV technician for help.

WARNING!

- **DO NOT** immerse in water, drop into fire.
- **DO NOT** disassembly the product.
- Please charging the lantern at least once per 1 month in order to keep the battery in normal stage.
- Please always handle the battery in safe way.
- If the lantern has been destroyed or crashed, do not use it again or consult your product provider
- The USB charging cable is for indoor use only.
- Never short-circuit the terminal of the battery and the plug of the USB charging cable. It may cause the battery to overheat, resulting in fire or damage of the components.
- If the USB charging cable, USB plug, or lantern body is damaged. **DO NOT** use it.
- Use the Micro-USB charging cable included for charging only.
- Lithium batteries in the product can easily rupture, ignite, or explode when exposed to high temperatures, or direct sunlight. The product should be stored and charged under well ventilated environment. Short-circuiting a battery can also cause it to ignite or explode. Never open a battery's casing. Batteries contain safety devices that, protect the cells inside from abuse. If damaged, these can cause the battery to ignite or exploded
- **DO NOT** charge the lantern and charge an electronic device at the same time. This will shorten the lantern's battery life.
- Securely close the USB cover at the back of the lantern so that it will not be damage while water splash/ rain, or the water resistance will be compromised.
- Safely and properly dispose of the battery lantern according to your local regulations when it comes to the end of its useful life.
- This lantern is **NOT** a toy. Children should be supervised to ensure that they do not play with this lantern.
- A long period of non-use will lower the voltage of the battery due to natural self-discharge. If the light is kept on until the power is completely gone (i.e. over discharge), it may shorten the battery life. Even when you do not use the lantern. Charge the battery every month.
- **DO NOT** charge the lantern for more than 8 hours.
- If the lantern does not serve the proper running time even though the battery is fully charged, the battery may have reached the end of its useful life.

Specification

Illumination (Lumens)	125 (High)	45 (Low)	
Runtime w/Light	6 hrs 15 mins (High)	22 hrs (Low)	30 hrs (Red)
Runtime w/Light & Bluetooth	4 hrs 45 mins (High)	9 hrs 30 mins (Low)	
Battery Type	3.7V 2600mAh Lithium battery		
Operating Temperature	-20˚c to 45˚c		
Operating Humidity	≤ 90%		

Before First Use

Before first and every use, charge the unit battery fully following the instructions on **"HOW TO CHARGE"**. When the battery is not in use for a long period, the runtime of the light will be shortened due to the self-discharge of the battery.

Product Features

- 3 Light Modes: High, Low, Red Light and Off
- Integrated wireless Bluetooth speaker connection, Bluetooth 3.0 Audio
- Bluetooth On / Off power switch
- Built in 3.7V 2600mAh Lithium Battery
- DC 5V/2.1A USB output, suitable for battery charge on electronic devices with USB input.
- DC 5V/1A micro-USB input (Charger Port)
- Connect audio cable (not included) directly to AUX audio plug to play music without Bluetooth connection.

❶ Intergraded handle with hook
❷ Main Button (Power and mode selection)
❸ Battery Power Indicator (BPI)
❹ USB cover
❺ Micro-USB Charger Port
❻ USB Output
❼ Bluetooth "On / Off" Switch
❽ Speaker
❾ AUX audio plug (not included)
❿ Micro-USB charging cable

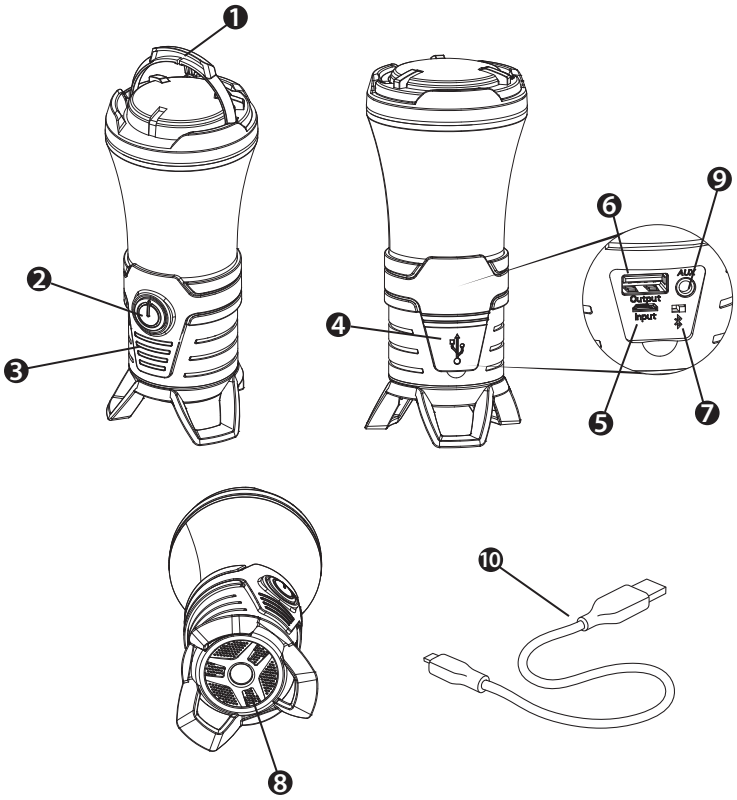

This device complies with part 15 of the FCC Rules. Operation is subject to the following two conditions: (1) This device may not cause harmful interference, and (2) this device must accept any interference received, including interference that may cause undesired operation.
The Bluetooth® word mark and logos are registered trademakrs owned by Bluetooh SIG, Inc. and any use of such marks by Brunton Group, Inc. is under license.