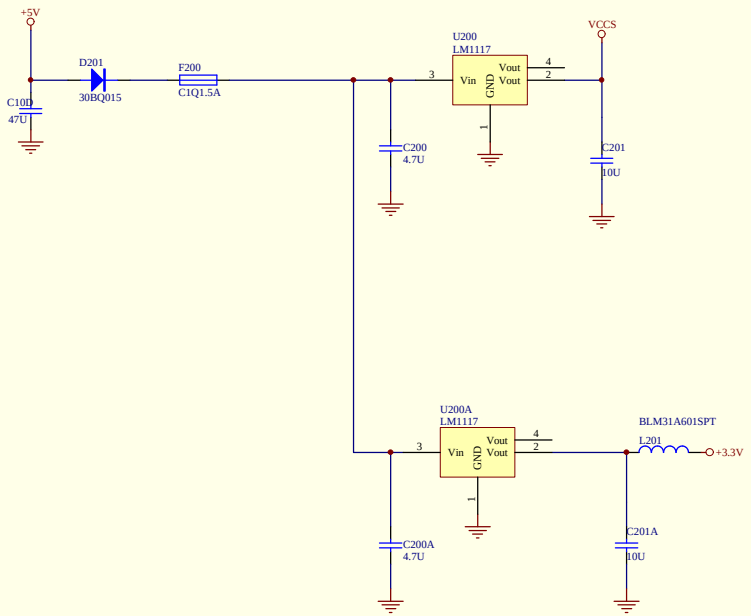

Title	11 Mbps WLAN USB Adapter	
Size B	Number USB-PWV03.SCH	Revision 03
Date: 1-Sep-2000		Sheet 5 of 7
File: \\..\usb-pwv03.SCH		Drawn By:

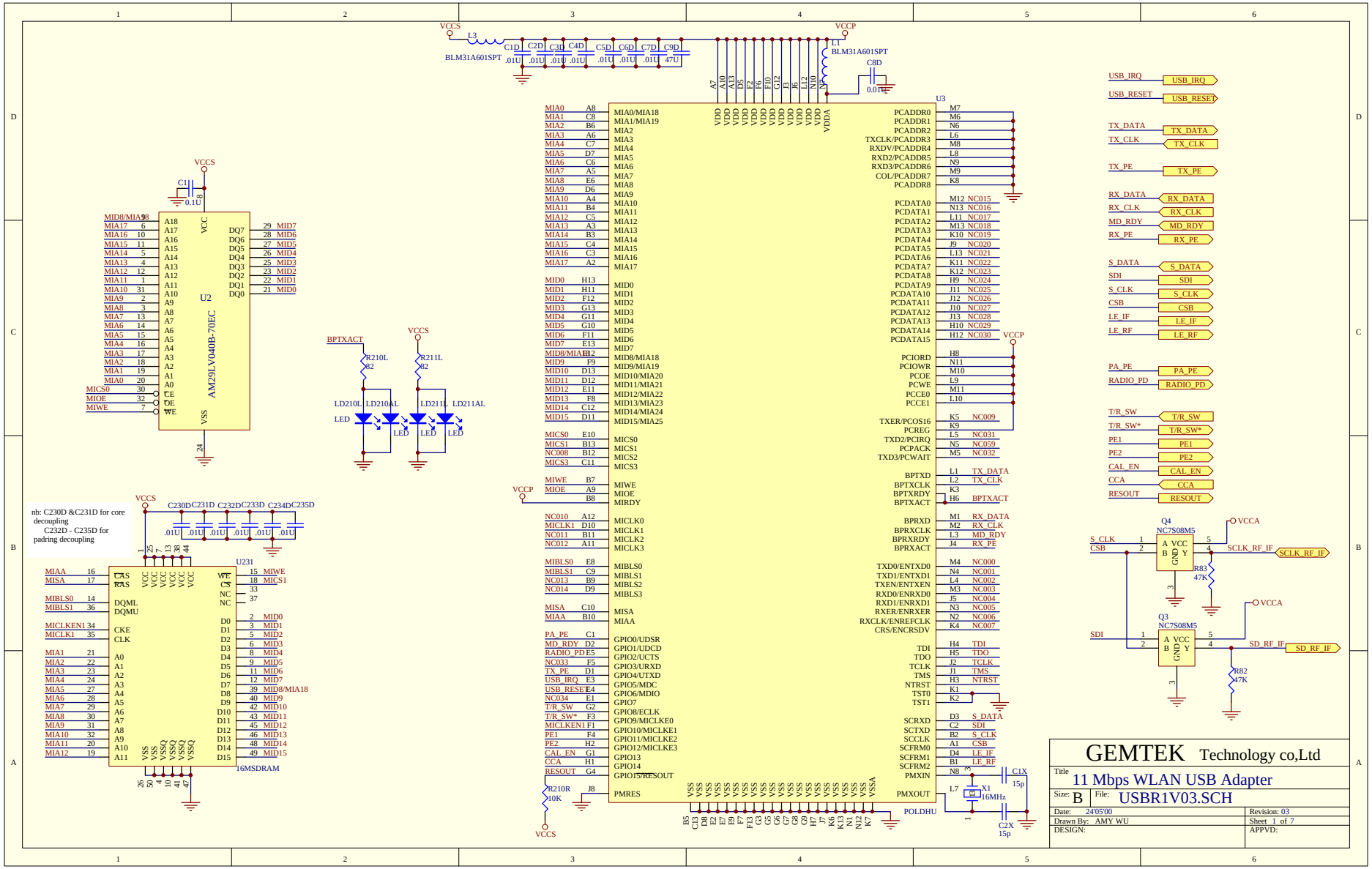
VCCS
L3
BLM31A601SPT
C1D .01U
C2D .01U
C3D .01U
C4D .01U
C5D .01U
C6D .01U
C7D .01U
C9D .47U
VCCP
L1
BLM31A601SPT
C8D 0.01U
U3
U2
AM29LV040B-70EC
C1 0.1U
R210L 62
R211L 62
BPTXACT
LD210L LD210AL LD211L LD211AL
LED
nb: C230D &C231D for core decoupling
C232D - C235D for padring decoupling
C230D C231D C232D C233D C234D C235D
U231
16MSDRAM
R210R 10K
Q4 NC7S08M5
Q3 NC7S08M5
R83 47K
R82 47K
X1 16MHz
C1X 15p
C2X 15p
USB_IRQ
USB_RESET
TX_DATA
TX_CLK
TX_PE
RX_DATA
RX_CLK
MD_RDY
RX_PE
S_DATA
SDI
S_CLK
CSB
LE_IF
LE_RF
PA_PE
RADIO_PD
T/R_SW
T/R_SW*
PE1
PE2
CAL_EN
CCA
RESOUT
SCLK_RF_IF
SD_RF_IF
GEMTEK Technology co,Ltd
Title 11 Mbps WLAN USB Adapter
Size: B File: USBR1V03.SCH
Date: 24/05/00
Revision: 03
Drawn By: AMY WU
Sheet 1 of 7
DESIGN:
APPVD:

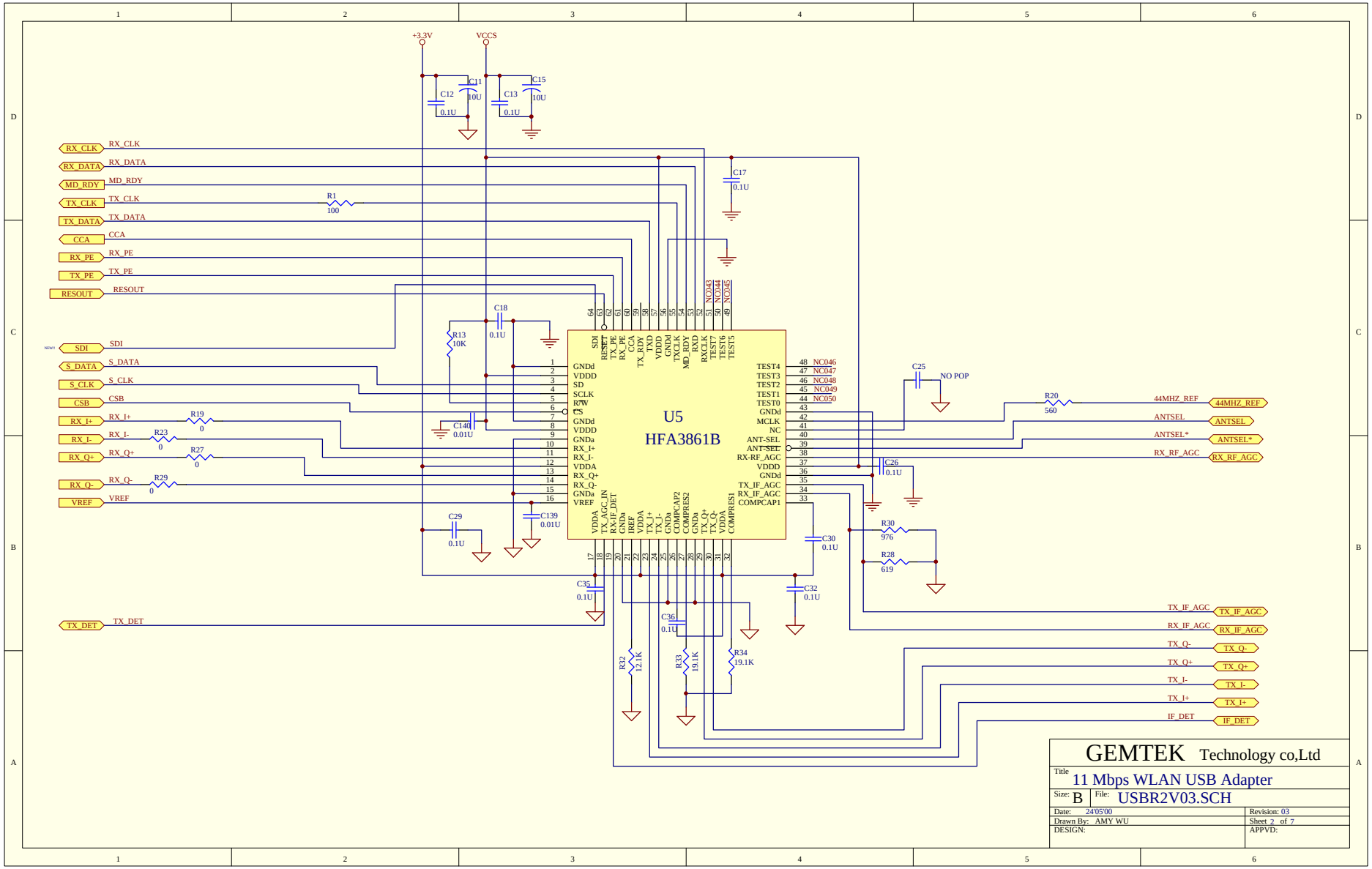
U5
HFA3861B
+3.3V
VCCS
C11 10U
C12 0.1U
C13 0.1U
C15 10U
C17 0.1U
C18 0.1U
C140 0.01U
C139 0.01U
C29 0.1U
C35 0.1U
C36 0.1U
C30 0.1U
C32 0.1U
C26 0.1U
C25 NO POP
R1 100
R13 10K
R19 0
R23 0
R27 0
R29 0
R20 560
R30 976
R28 619
R32 12.1K
R33 19.1K
R34 19.1K
RX_CLK
RX_DATA
MD_RDY
TX_CLK
TX_DATA
CCA
RX_PE
TX_PE
RESOUT
SDI
S_DATA
S_CLK
CSB
RX_I+
RX_I-
RX_Q+
RX_Q-
VREF
TX_DET
44MHZ_REF
ANTSEL
ANTSEL*
RX_RF_AGC
TX_IF_AGC
RX_IF_AGC
TX_Q-
TX_Q+
TX_I-
TX_I+
IF_DET
GEMTEK Technology co,Ltd
Title
11 Mbps WLAN USB Adapter
Size: B
File: USBR2V03.SCH
Date: 24'05'00
Revision: 03
Drawn By: AMY WU
Sheet 2 of 7
DESIGN:
APPVD:

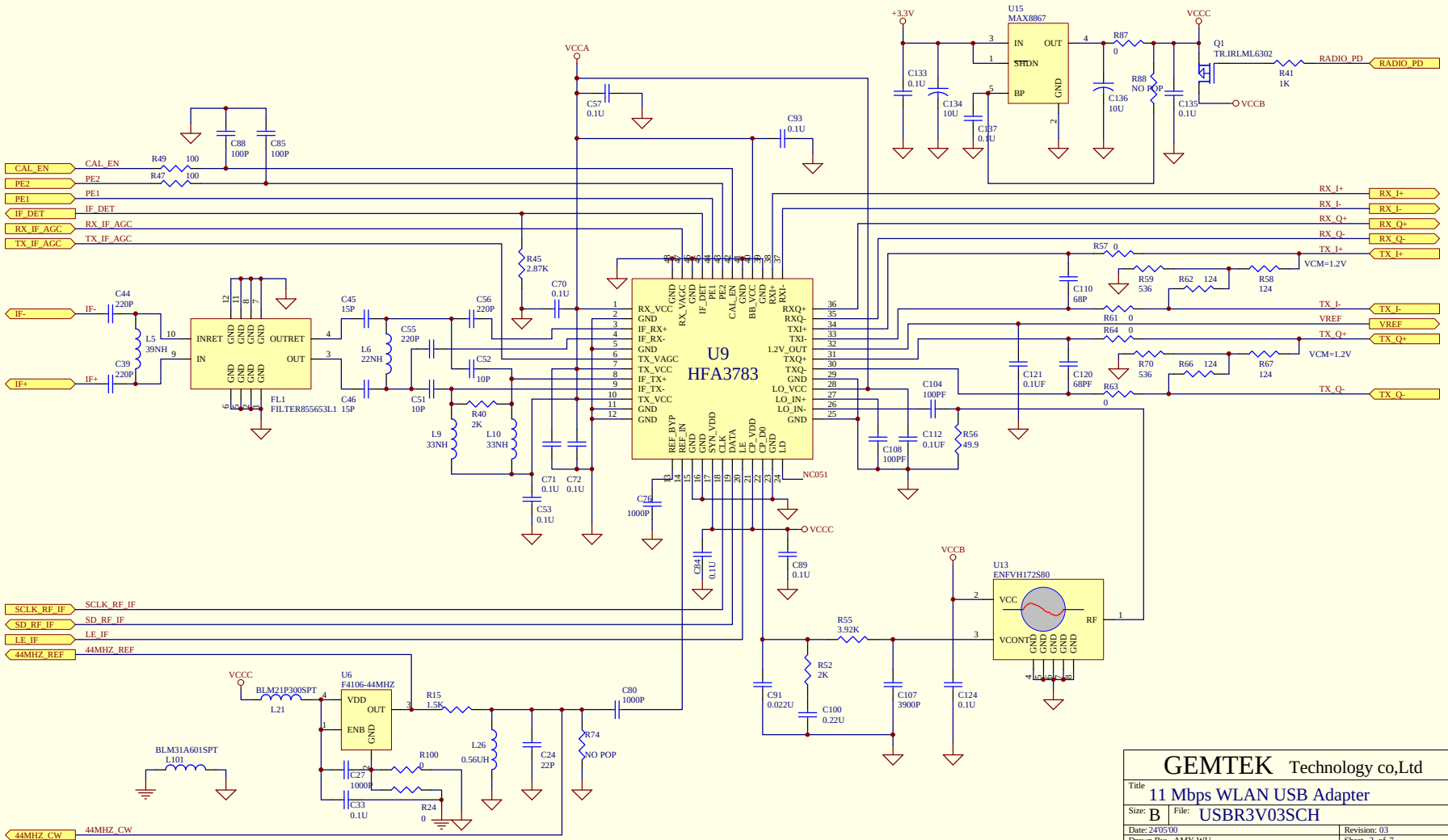

GEMTEK Technology co,Ltd

Title	11 Mbps WLAN USB Adapter
Size: B	File: USBR3V03SCH
Date: 2405/00	Revision: 03
Drawn By: AMY WU	Sheet 3 of 7
DESIGN:	APPVD:

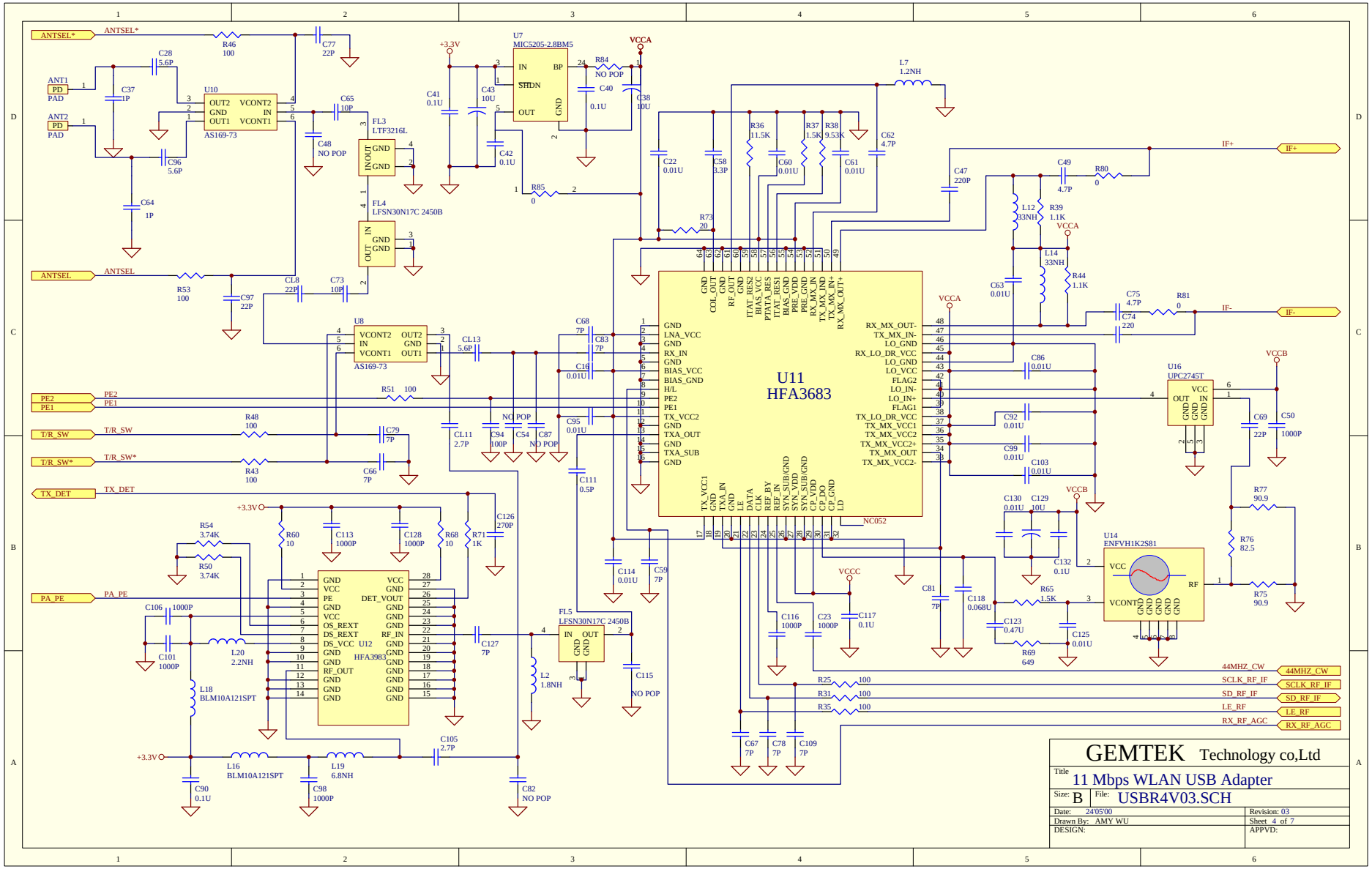
U11
HFA3683
U10
AS169-73
U8
AS169-73
U7
MIC5205-2.8BM5
U12
HFA3983
U16
UPC2745T
U14
ENFVH1K2S81
FL3
LTF3216L
FL4
LFSN30N17C 2450B
FL5
LFSN30N17C 2450B
ANTSEL*
ANTSEL
ANT1
ANT2
PE2
PE1
T/R_SW
T/R_SW*
TX_DET
PA_PE
IF+
IF-
VCCA
VCCB
VCCC
+3.3V
44MHZ_CW
SCLK_RF_IF
SD_RF_IF
LE_RF
RX_RF_AGC
GEMTEK Technology co,Ltd
Title
11 Mbps WLAN USB Adapter
Size: B
File: USBR4V03.SCH
Date: 24'05'00
Revision: 03
Drawn By: AMY WU
Sheet 4 of 7
DESIGN:
APPVD:

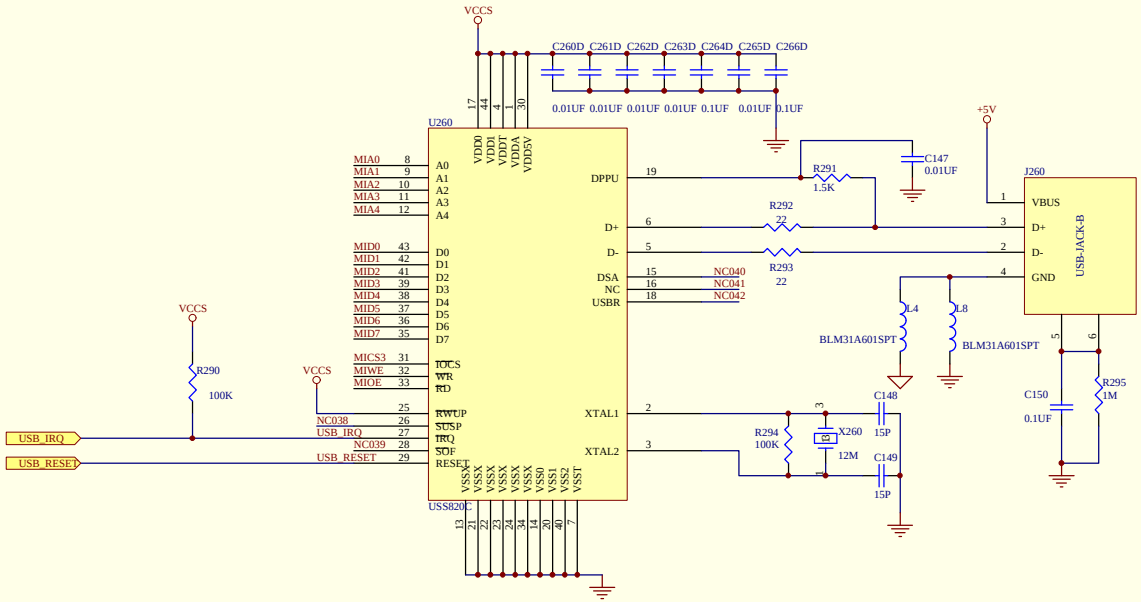

Title
11 Mbps WLAN USB Adapter

Size	Number	Revision
B	USB-USBV03.SCH	03

Date:	1-Sep-2000	Sheet 7 of 7	
File:	\\..\usb-usbv03.sch	Drawn By:	