NetModule Automotive Gateway NG800

User Manual for Software Version 99.99

Manual Version 1.13

NetModule AG, Switzerland

October 12, 2023

NetModule Automotive Gateway NG800

This manual covers all variants of the *NG800* product type.

The specifications and information regarding the products in this manual are subject to change without notice. We would like to point out that NetModule makes no representation or warranties with respect to the contents herein and shall not be responsible for any loss or damage caused to the user by the direct or indirect use of this information This document may contain information about third party products or processes. Such third party information is generally out of influence of NetModule and therefore NetModule shall not be responsible for the correctness or legitimacy of this information. Users must take full responsibility for their application of any products.

Copyright ©2023 NetModule AG, Switzerland All rights reserved

This document contains proprietary information of NetModule. No parts of the work described herein may be reproduced. Reverse engineering of the hardware or software is prohibited and protected by patent law. This material or any portion of it may not be copied in any form or by any means, stored in a retrieval system, adopted or transmitted in any form or by any means (electronic, mechanical, photographic, graphic, optic or otherwise), or translated in any language or computer language without the prior written permission of NetModule.

A large amount of the source code to this product is available under licenses which are both free and open source. Most of it is covered by the GNU General Public License which can be obtained from www.gnu.org. The remainder of the open source software which is not under the GPL, is usually available under one of a variety of more permissive licenses. A detailed license information for a particular software package can be provided on request.

All other products or company names mentioned herein are used for identification purposes only and may be trademarks or registered trademarks of their respective owners. The following description of software, hardware or process of NetModule or other third party provider may be included with your product and will be subject to the software, hardware or other license agreements.

Contact

https://support.netmodule.com

NetModule AG	Tel +41 31 985 25 10
Maulbeerstrasse 10	Fax +41 31 985 25 11
CH-3011 Bern	info@netmodule.com
Switzerland	https://www.netmodule.com

Contents

1. Welcome to NetModule . . . 9
2. Conformity . . . 10
   2.1. Safety Instructions . . . 10
   2.2. Declaration of Conformity . . . 12
   2.3. Waste Disposal . . . 14
   2.4. National Restrictions . . . 14
   2.5. Open Source Software . . . 15
3. Specifications . . . 16
   3.1. Appearance . . . 16
   3.2. Features . . . 17
   3.3. Environmental Conditions . . . 17
   3.4. Interfaces . . . 18
      3.4.1. Overview . . . 18
      3.4.2. Default LED Indicators . . . 19
      3.4.3. Reset . . . 19
      3.4.4. Mobile . . . 21
      3.4.5. Bluetooth . . . 21
      3.4.6. WLAN . . . 22
      3.4.7. GNSS . . . 23
      3.4.8. Pin Assignment X48 . . . 24
      3.4.9. Power Supply . . . 26
      3.4.10. Fast Ethernet (100 Base-Tx Interface) . . . 27
      3.4.11. Automotive Ethernet (100 Base-T1 Interface) . . . 27
      3.4.12. 2x CAN Interface . . . 29
      3.4.13. Serial RS-232 . . . 30
4. Installation . . . 31
   4.1. Installation of SIM . . . 31
   4.2. Installation of the Cellular Antenna . . . 31
   4.3. Installation of the WLAN Antennas . . . 32
   4.4. Installation of the Bluetooth Antenna . . . 32
   4.5. Installation of the GNSS Antenna . . . 32
   4.6. Installation of the Local Area Network / Fast Ethernet . . . 32
   4.7. Installation of the Automotive Ethernet . . . 32
   4.8. Installation of the Power Supply & Delayed Power Off . . . 33
5. Configuration . . . 34
   5.1. First Steps . . . 34
      5.1.1. Initial Access . . . 34
      5.1.2. Automatic Mobile Data Connection . . . 35
      5.1.3. Recovery . . . 36
   5.2. HOME . . . 37
   5.3. INTERFACES . . . 40
      5.3.1. WAN . . . 40
      5.3.2. Ethernet . . . 46
      5.3.3. Mobile . . . 56
      5.3.4. WLAN . . . 64
      5.3.5. Software Bridges . . . 75
      5.3.6. Serial . . . 76
      5.3.7. Bluetooth Low Energy . . . 81

5.3.8. GNSS . . . 82
5.4. ROUTING . . . 85
5.4.1. Static Routes . . . 85
5.4.2. Extended Routing . . . 87
5.4.3. Multipath Routes . . . 88
5.4.4. Multicast . . . 89
5.4.5. BGP . . . 91
5.4.6. OSPF . . . 93
5.4.7. Mobile IP . . . 94
5.4.8. Quality Of Service . . . 98
5.5. FIREWALL . . . 100
5.5.1. Administration . . . 100
5.5.2. Adress/Port Groups . . . 100
5.5.3. Rules . . . 101
5.5.4. NAPT . . . 103
5.6. VPN . . . 106
5.6.1. OpenVPN . . . 106
5.6.2. IPsec . . . 112
5.6.3. PPTP . . . 118
5.6.4. GRE . . . 121
5.6.5. L2TP . . . 122
5.6.6. Dial-In . . . 123
5.7. SERVICES . . . 125
5.7.1. SDK . . . 125
5.7.2. DHCP Server . . . 134
5.7.3. DNS Server . . . 137
5.7.4. NTP Server . . . 140
5.7.5. Dynamic DNS . . . 141
5.7.6. E-Mail . . . 143
5.7.7. Events . . . 145
5.7.8. SMS . . . 146
5.7.9. SSH/Telnet Server . . . 148
5.7.10. SNMP Agent . . . 150
5.7.11. Let's Encrypt . . . 155
5.7.12. Web Server . . . 156
5.7.13. MQTT Broker . . . 157
5.7.14. Softflow . . . 158
5.7.15. Discovery . . . 159
5.7.16. Redundancy . . . 160
5.7.17. ITxPT . . . 162
5.7.18. Voice Gateway . . . 171
5.7.19. Access Controller WLAN-AP . . . 177
5.8. SYSTEM . . . 185
5.8.1. System . . . 185
5.8.2. Authentication . . . 189
5.8.3. Software Update . . . 192
5.8.4. Module Firmware Update . . . 193
5.8.5. Software Profiles . . . 194
5.8.6. Configuration . . . 195

5.8.7. Troubleshooting . . . 198
5.8.8. Keys and Certificates . . . 201
5.8.9. Licensing . . . 206
5.8.10. Legal Notice . . . 207
5.9. LOGOUT . . . 208
6. Command Line Interface . . . 209
6.1. General Usage . . . 209
6.2. Print Help . . . 210
6.3. Getting Config Parameters . . . 210
6.4. Setting Config Parameters . . . 211
6.5. Checking Config Completed . . . 211
6.6. Getting Status Information . . . 211
6.7. Scanning Networks . . . 212
6.8. Sending E-Mail or SMS . . . 212
6.9. Updating System Facilities . . . 212
6.10. Manage keys and certificates . . . 213
6.11. Restarting Services . . . 213
6.12. Debug System . . . 214
6.13. Resetting System . . . 214
6.14. Rebooting System . . . 215
6.15. Running Shell Commands . . . 215
6.16. Working with History . . . 215
6.17. CLI-PHP . . . 215
A. Appendix . . . 221
A.1. Abbrevations . . . 221
A.2. System Events . . . 223
A.3. Factory Configuration . . . 226
A.4. SNMP VENDOR MIB . . . 227
A.5. SDK Examples . . . 228

List of Figures

3.1. Reset Input (Serial Interface not used) . . . 20
3.2. Reset Input (Serial Interface used) . . . 20
3.3. Pin Assignment X48 . . . 24
3.4. X48 Outline . . . 24

5.1. Initial Login . . . 35
5.2. Home . . . 37
5.3. WAN Links . . . 40
5.4. Link Supervision . . . 43
5.5. WAN Settings . . . 45
5.6. Ethernet Ports . . . 46
5.7. Ethernet Link Settings . . . 47
5.8. Authentication via IEEE 802.1X . . . 48
5.9. VLAN Management . . . 50
5.10. LAN IP Configuration . . . 51
5.11. LAN IP Configuration - LAN Interface . . . 52
5.12. LAN IP Configuration - WAN Interface . . . 53
5.13. SIMs . . . 56
5.14. eSIM Profiles . . . 59
5.15. Add eUICC Profile . . . 60
5.16. WWAN Interfaces . . . 62
5.17. WLAN Management . . . 64
5.18. WLAN Configuration . . . 69
5.19. WLAN IP Configuration . . . 73
5.20. Serial Port Administration . . . 77
5.21. Serial Port Settings . . . 78
5.22. Static Routing . . . 85
5.23. Extended Routing . . . 87
5.24. Multipath Routes . . . 88
5.25. Mobile IP . . . 96
5.26. Firewall Groups . . . 100
5.27. Firewall Rules . . . 101
5.28. Masquerading . . . 103
5.29. Inbound NAPT . . . 104
5.30. OpenVPN Administration . . . 106
5.31. OpenVPN Configuration . . . 107
5.32. OpenVPN Client Management . . . 111
5.33. IPsec Administration . . . 113
5.34. IPsec Configuration . . . 114
5.35. PPTP Administration . . . 118
5.36. PPTP Tunnel Configuration . . . 119
5.37. PPTP Client Management . . . 120
5.38. Dial-in Server Settings . . . 123
5.39. SDK Administration . . . 129
5.40. SDK Jobs . . . 130
5.41. DHCP Server . . . 134
5.42. DNS Server . . . 137
5.43. NTP Server . . . 140

5.44. Dynamic DNS Settings . . . 141
5.45. E-Mail Settings . . . 143
5.46. SMS Configuration . . . 146
5.47. SSH and Telnet Server . . . 148
5.48. SNMP Agent . . . 151
5.49. Web Server . . . 156
5.50. VRRP Configuration . . . 160
5.51. ITxPT configuration . . . 162
5.52. ITxPT FMStoIP . . . 164
5.53. ITxPT GNSS . . . 168
5.54. ITxPT Time . . . 169
5.55. ITxPT VEHICLEtoIP . . . 170
5.56. Voice Gateway Administration . . . 171
5.57. AC WLAN-AP Administration . . . 178
5.58. AC WLAN-AP Configuration . . . 180
5.59. AC WLAN-AP Profiles . . . 183
5.60. System . . . 185
5.61. Regional settings . . . 188
5.62. User Accounts . . . 189
5.63. Remote Authentication . . . 191
5.64. Manual File Configuration . . . 195
5.65. Automatic File Configuration . . . 196
5.66. Factory Configuration . . . 197
5.67. Log Viewer . . . 199
5.68. Tech Support File . . . 200
5.69. Keys and certificates . . . 201
5.70. Certificate Configuration . . . 203
5.71. Licensing . . . 206

List of Tables

3.1. Environmental Conditions . . . 17
3.2. NG800 Interfaces . . . 18
3.3. NG800 Status Indicators . . . 19
3.4. Mobile Antenna Port Specification . . . 21
3.5. IEEE 802.11 Standards . . . 22
3.6. WLAN Antenna Port Specification . . . 22
3.7. GNSS Specifications . . . 23
3.8. GNSS / GPS Antenna Port Specification . . . 23
3.9. Pin Assignments of X48 . . . 25
3.10. Power Specifications . . . 26
3.11. Pin Assignments of Power Supply . . . 26
3.12. Fast Ethernet Port Specification . . . 27
3.13. Pin Assignments of Fast Ethernet Connector . . . 27
3.14. Automotive Ethernet Port Specification . . . 28
3.15. Pin Assignments of Automotive Ethernet Port 1 . . . 28
3.16. Pin Assignments of Automotive Ethernet Port 2 . . . 28
3.17. Specification of 2xCAN Interface . . . 29
3.18. Pin Assignments of 2xCAN Interface . . . 29
3.19. RS-232 Port Specification . . . 30
3.20. Pin Assignments of RS-232 Interface . . . 30

5.25. IEEE 802.11 Network Standards . . . 66
5.50. Static Route Flags . . . 86
5.98. SMS Control Commands . . . 133
5.112. SMS Number Expressions . . . 147
5.175. Certificate Sections . . . 202
5.176. Certificate Operations . . . 202

A.1. Abbreviations . . . 223
A.2. Systemereignisse . . . 225
A.3. SDK Examples . . . 230

1. Welcome to NetModule

Thank you for purchasing a NetModule product. This document should give you an introduction to the device and its features. The following chapters describe any aspects of commissioning the device, installation procedure and provide helpful information towards configuration and maintenance.

Please find further information such as sample SDK scripts or configuration samples in our wiki on https://wiki.netmodule.com.

2. Conformity

This chapter provides general information for putting the gateway into operation.

2.1. Safety Instructions

Please carefully observe all safety instructions in the manual that are marked with the symbol ⚠.

Compliance information: The NetModule gateways must be used in compliance with any and all applicable national and international laws and with any special restrictions regulating the utilization of the communication module in prescribed applications and environments.

Information about the accessories / changes to the device:

- Please only use original accessories to prevent injuries and health risks.
- Changes made to the device or the use of non-authorized accessories will render the warranty null and void and potentially invalidate the operating license.

Information about the device interfaces:

- All systems that are connected to the NetModule router interfaces must meet the requirements for SELV (Safety Extra Low Voltage) systems.
- Interconnections must not leave the building nor penetrate the body shell of a vehicle.
- Connections for antennas may only exit the building or the vehicle hull if transient overvoltages (according to IEC 62368-1) are limited by external protection circuits down to 1 500 V_{peak}. All other connections must remain within the building or the vehicle hull.
- Installed antennas must always be at least 40 cm away from people.
- Devices with a WLAN interface may be operated only with applicable Regulatory Domain configured. Special attention must be paid to country, number of antennas and the antenna gain (see also chapter 5.3.4). WLAN antennas with a higher amplification may be used with the NetModule router "Enhanced-RF-Configuration" software license and the antenna gain and cable attenuation that have been correctly configured by certified specialized personnel. A misconfiguration will lead to loss of the approval.
- The maximum gain of an antenna (incl. the attenuation of the connection cables) must not exceed the following values in the corresponding frequency range:
  - Mobile radio (600MHz .. 1GHz) < 3.2dBi
  - Mobile radio (1.7GHz .. 2GHz) < 6.0dBi
  - Mobile radio (2.5GHz .. 4.2GHz) < 6.0dBi
  - WiFi (2.4GHz .. 2.5GHz) < 3.2dBi
  - WiFi (5.1GHz .. 5.9GHz) < 4.5dBi
- Note that GNSS signals can be obfuscated or blocked by malicious third-party devices.
- Only CE-compliant power supplies with a current-limited SELV output voltage range may be used with the NetModule routers.

FCC Warning:

- Any Changes or modifications not expressly approved by the party responsible for compliance could void the user's authority to operate the equipment.
- This device complies with part 15 of the FCC Rules. Operation is subject to the following two conditions:
- (1) This device may not cause harmful interference , and
- (2) this device must accept any interference received , including interference that may cause undesired operation.

- Exposure Requirements: To comply with the FCC RF exposure compliance requirements, the device must be installed to provide a separation distance of at least 40 cm from all persons.

General safety instructions:

- Observe the usage limitations of radio units at filling stations, in chemical plants, in systems with explosives or potentially explosive locations.
- The devices may not be used in airplanes.
- Exercise particular caution near personal medical aids, such as pacemakers and hearing aids.
- The NetModule gateways may also cause interference in the nearer distance of TV sets, radio receivers and personal computers.
- Never perform work on the antenna system during a thunderstorm.
- Protect them against aggressive chemical atmospheres and humidity or temperatures outside specifications.
- We highly recommended creating a copy of a working system configuration. It can be easily applied to a newer software release afterwards.

2.2. Declaration of Conformity

NetModule hereby declares that under our own responsibility that the gateways comply with the relevant standards following the provisions of the *RED Directive 2014/53/EU*. The signed version of the *Declaration of Conformity* can be obtained from https://www.netmodule.com/downloads

Operating frequency bands and related maximum radio frequency power transmitted is shown below, according to RED Directive 2014/53/EU, Article 10 (8a, 8b).

WLAN maximum output power

IEE 802.11b/g/n
Operation frequency range: 2412-2472 MHz (13 channels)
Maximum output power: 20.7 dBm EIRP average (on antenna port,calculated)

IEE 802.11a/n
Operation frequency range: 5180-5350 MHz / 5470-5700 MHz (19 channels)
Maximum output power: 24 dBm EIRP average (on antenna port,calculated)

Bluetooth Low Energy (BLE) maximum output power
Operation frequency range: 2402-2480 MHz (79 channels)
Maximum output power: 15.7 dBm EIRP average (on antenna port, calculated)

Cellular maximum output power

GSM Band 900
Operation frequency range: 880-915, 925-960 MHz

Maximum output power: 33.5 dBm rated

GSM Band 1800
Operation frequency range: 1710-1785, 1805-1880 MHz
Maximum output power: 30.5 dBm rated

WCDMA Band I
Operation frequency range: 1920-1980, 2110-2170 MHz
Maximum output power: 24 dBm rated

WCDMA Band VIII
Operation frequency range: 880-915, 925-960 MHz
Maximum output power: 24 dBm rated

LTE FDD Band 1
Operation frequency range: 1920-1980, 2110-2170 MHz
Maximum output power: 24 dBm rated

LTE FDD Band 3
Operation frequency range: 1710-1785, 1805-1880 MHz
Maximum output power: 24 dBm rated

LTE FDD Band 7
Operation frequency range: 2500-2570, 2620-2690 MHz
Maximum output power: 23.5 dBm rated

LTE FDD Band 8
Operation frequency range: 880-915, 925-960 MHz
Maximum output power: 24 dBm rated

LTE FDD Band 20
Operation frequency range: 832-862, 791-821 MHz
Maximum output power: 24 dBm rated

LTE FDD Band 28
Operation frequency range: 703-748, 758-803
Maximum output power: 24 dBm rated

LTE FDD Band 38
Operation frequency range: 2570-2620 MHz
Maximum output power: 24 dBm rated

LTE FDD Band 40
Operation frequency range: 2300-2400 MHz
Maximum output power: 24 dBm rated

2.3. Waste Disposal

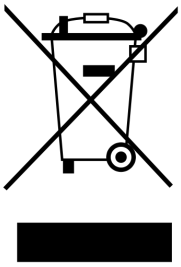

In accordance with the requirements of the *Council Directive 2012/19/EU* regarding Waste Electrical and Electronic Equipment (WEEE), you are urged to ensure that this product will be segregated from other waste at end-of-life and delivered to the WEEE collection system in your country for proper recycling.

2.4. National Restrictions

This product may be generally used in all EU countries (and other countries following the *RED Directive 2014/53/EU*) without any limitation. Please refer to our WLAN Regulatory Database for getting further national radio interface regulations and requirements for a particular country.

2.5. Open Source Software

We inform you that NetModule products may contain in part open-source software. We are distributing such open-source software to you under the terms of GNU General Public License (GPL)[1], GNU Lesser General Public License (LGPL)[2] or other open-source licenses[3]. These licenses allow you to run, copy, distribute, study, change and improve any software covered by GPL, Lesser GPL, or other open-source licenses without any restrictions from us or our end user license agreement on what you may do with that software. Unless required by applicable law or agreed to in writing, software distributed under open-source licenses is distributed on an "AS IS" basis, WITHOUT WARRANTIES OR CONDITIONS OF ANY KIND, either express or implied.

To obtain the corresponding open source codes covered by these licenses, please contact our technical support at router@support.netmodule.com.

Acknowledgements

This product includes:

- PHP, freely available from http://www.php.net
- Software developed by the OpenSSL Project for use in the OpenSSL Toolkit (http://www.openssl.org)
- Cryptographic software written by Eric Young (eay@cryptsoft.com)
- Software written by Tim Hudson (tjh@cryptsoft.com)
- Software written Jean-loup Gailly and Mark Adler
- MD5 Message-Digest Algorithm by RSA Data Security, Inc.
- An implementation of the AES encryption algorithm based on code released by Dr Brian Gladman
- Multiple-precision arithmetic code originally written by David Ireland
- Software from The FreeBSD Project (http://www.freebsd.org)

[1] Please find the GPL text under http://www.gnu.org/licenses/gpl-2.0.txt
[2] Please find the LGPL text under http://www.gnu.org/licenses/lgpl.txt
[3] Please find the license texts of OSI licenses (ISC License, MIT License, PHP License v3.0, zlib License) under http://opensource.org/licenses

3. Specifications

3.1. Appearance

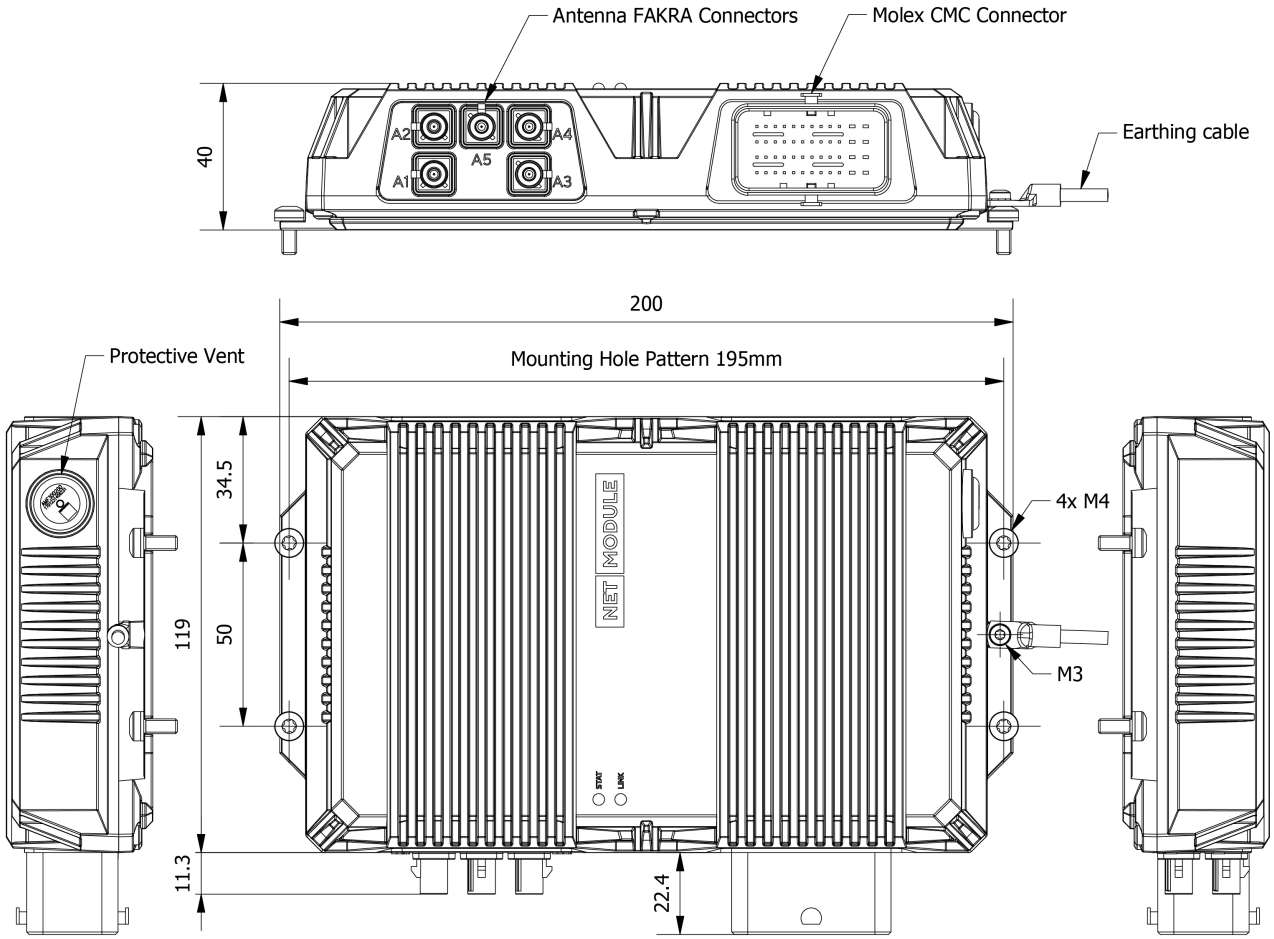

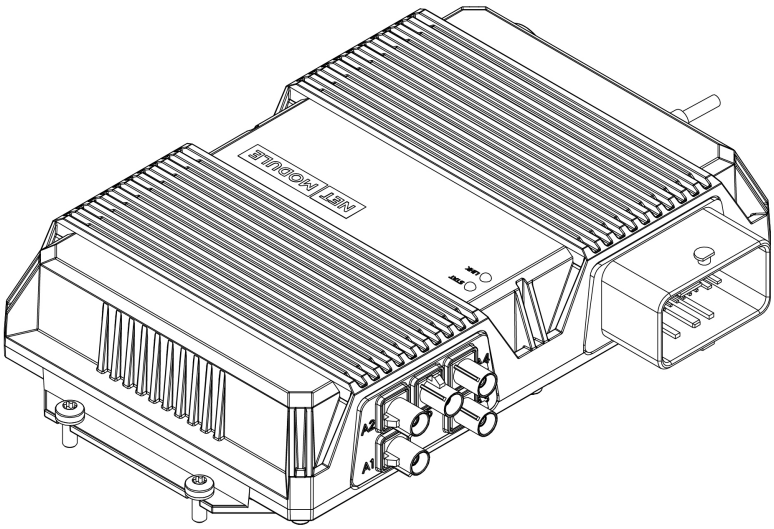

3.2. Features

All models of the NG800 Family have following standard functionalities:

- 1x LTE, UMTS, GSM
- 1x WLAN IEEE 802.11abgn with Bluetooth and Bluetooth Low Energy
- 1x GNSS with automotive Dead Reckoning
- 1x Fast Ethernet port (10/100 Mbit/s)
- 2x Automotive Ethernet ports (100BASE-T1)
- 1x eUICC SIM
- 1 GHz CPU, 512 MB RAM, 8 GB Flash
- 2x CAN-passive (2x CAN-active on request)
- Battery backed real time clock for time keeping
- Inertial Motion Unit, 6 Axis (SW support on request)
- Full featured router software

The NG800 can optionally be equipped with Software Keys for additional functionality.

Due to its modular approach, the NG800 router and its hardware components can be arbitrarily assembled according to its indented usage or application. Please contact us in case of special project requirements.

3.3. Environmental Conditions

Parameter	Rating
Nominal Input Voltage	12 V_{DC} to 24 V_{DC}
Absolute Input Voltage	9 V_{DC} to 36 V_{DC}
Operating Temperature Range	$-40\,°C$ to $+75\,°C$
Storage Temperature Range	$-40\,°C$ to $+85\,°C$
Humidity	5 to 95% (non-condensing)
Altitude	up to 4000 m
Over-Voltage Category	Vehicle based equipment
Pollution Degree	2
Ingress Protection Rating	IP69k
Vibration	ISO 16750-3 (road vehicles), IEC 60068-2-64 (24 h)
Shock	ISO 16750-3 (road vehicles), IEC 60068-2-27 (60 shocks)

Table 3.1.: Environmental Conditions

3.4. Interfaces

3.4.1. Overview

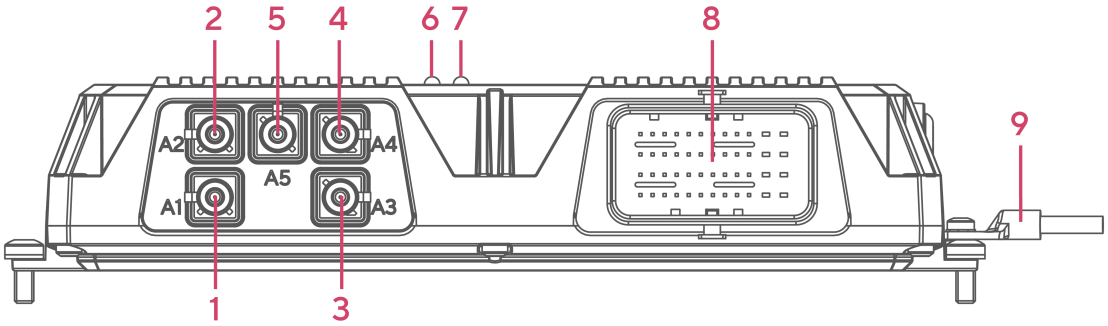

Nr.	Label	Function
1	A1 Cellular	FAKRA male connector for cellular main antenna
2	A2 Cellular	FAKRA male connector for cellular auxiliary antenna
3	A3 WLAN/BT	FAKRA male connector for WLAN/Bluetooth main antenna (2.4 GHz, 5 GHz)
4	A4 WLAN	FAKRA male connector for WLAN auxiliary antenna (2.4 GHz)
5	A5 GNSS	FAKRA male connector for GNSS
6	LED 1	Status LED
7	LED 2	Link LED
8	X48	48-pin CMC Molex interface for all wired connections
9	Earthing cable	Earthing the base plate is optional (protective earth is not compulsory)

Table 3.2.: NG800 Interfaces

3.4.2. Default LED Indicators

The following table describes the NG800 status indicators.

Housing Label	Software Label	Color	State	Function
STAT	SYS			Shows the overall system state. This could be derived from health indicators such as: – all services up and running – overall throughput is normal – CPU load is normal – the supervisor – . . . – User application (state set by user in SDK or container)
		●g	On	System operation state: normal
		●g	Blinking	System operation state: during startup
		●r	On	System operation state: emergency, watchdog, failure
LINK	WAN	●g	On	The hotlink connection is up.
		●g	Blinking	The hotlink connection is established or changing the interface.
		❍	Off	The hotlink is disabled.

Table 3.3.: NG800 Status Indicators

3.4.3. Reset

NG800 does not have a built-in reset button. An external reset can be triggered as described below (e.g. by installing an external reset button). The reset button has two functions:

1. Reboot the system:
   Apply reset signal for at least 3 seconds to trigger a system reboot.
   The reboot is indicated with the blinking STAT LED.
2. Factory reset:
   Apply reset signal for at least 10 seconds to trigger a factory reset.
   The start of the factory reset is confirmed by all LEDs lighting up for a second.

The RS232 receive input (RS232-RXD, Pin L1 of X48 connector) also serves also reset input. To assert a reset condition, the input is tied to a positive voltage >5.0 V_{DC}. It is possible to connect to the battery (12 V_{DC}, 24 V_{DC}).

When the input is asserted for longer than 100 micro-seconds (a character time) the receiver detects a break condition which is treated as reset active indication. Further processing of the signal is performed by software.

When the serial interface is not used, a push button can be connected from the positive battery port to the serial interface receive input (X48:L1) as shown in the following image.

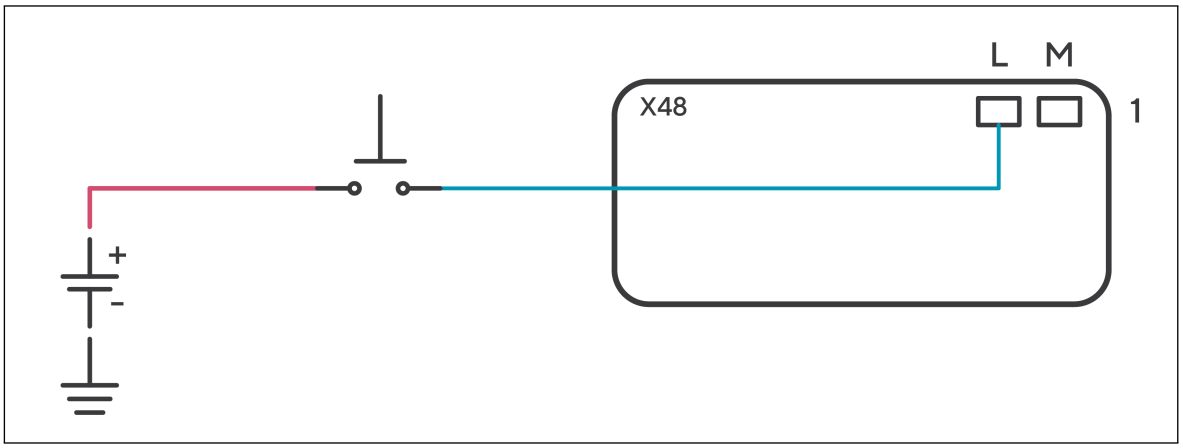

Figure 3.1.: Reset Input (Serial Interface not used)

If the serial interface is used in the application, a **break-before-make** switch must be used. The switch is required to protect the terminal equipment from the battery voltage.

In the inactive position the serial interface is connected between the terminal and the device, allowing serial communication. In the active position, the terminal is disconnected, and the receiver input is connected to the battery.

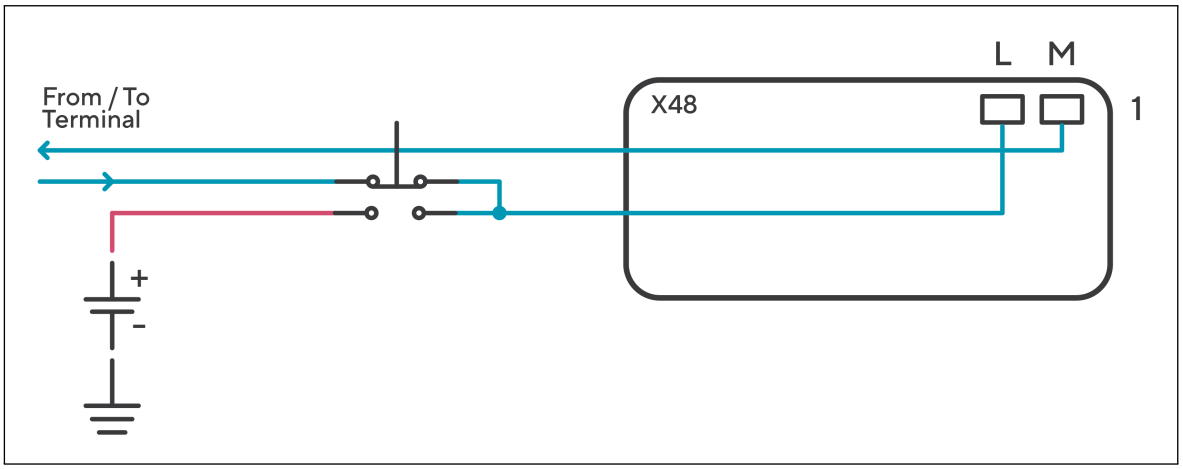

Figure 3.2.: Reset Input (Serial Interface used)

3.4.4. Mobile

The variants of the NG800 support multiple multimode modules for mobile communication. The LTE modules supports 2x2 MIMO.
Here you will find an overview of the different modems and the individual bands

The mobile antenna ports have the following specification:

Feature	Specification
Max. allowed cable length	30 m
Min. number of antennas 4G-LTE	2
Max. allowed antenna gain including cable attenuation	Mobile radio (600MHz .. 1GHz) < 3.2dBi Mobile radio (1.7GHz .. 2GHz) < 6.0dBi Mobile radio (2.5GHz .. 4.2GHz) < 6.0dBi
Min. distance between collocated radio transmitter antennas	20 cm
Min. distance between people and antenna	40 cm
Connector type	FAKRA, D-Code, Bordeaux

Table 3.4.: Mobile Antenna Port Specification

3.4.5. Bluetooth

The NG800 supports Bluetooth 4.2 including Bluetooth Low Energy.

3.4.6. WLAN

The variants of the NG800 support a IEEE 802.11a/b/g/n WLAN module.

Standard	Frequencies	Bandwidth	Max. Data Rate
802.11a	5 GHz	20 MHz	54 Mbit/s
802.11b	2.4 GHz	20 MHz	11 Mbit/s
802.11g	2.4 GHz	20 MHz	54 Mbit/s
802.11n	2.4 GHz	20 MHz	144 Mbit/s
802.11n	5 GHz	40 MHz	150 Mbit/s

Table 3.5.: IEEE 802.11 Standards

Note: 802.11n supports 2x2 MIMO in 2.4 GHz and 1x1 in 5 GHz.

The WLAN antenna ports have the following specification:

Feature	Specification
Max. allowed cable length	30 m
Max. allowed antenna gain including cable attenuation	3.2dBi (2,4GHz) resp. 4.5dBi (5GHz) [1]
Min. distance between collocated radio transmitter antennas	20 cm
Min. distance between people and antenna	40 cm
Connector type	FAKRA, I-Code, Beige

Table 3.6.: WLAN Antenna Port Specification

[1] **Note:** WLAN antennas with a higher gain may be used with the NetModule router "Enhanced-RF-Configuration" software license and the antenna gain and cable attenuation that have been correctly configured by certified specialized personnel.

3.4.7. GNSS

The GNSS module supports Dead Reckoning with onboard 3D accelerometer and 3D gyroscope.

Feature	Specification
Systems	GPS/GLONASS/BeiDou/Galileo
Data stream	JSON or NMEA
Channels	92
Tracking sensitivity	Up to -159 dBm
Accuracy	Up to 2.0 m CEP
Dead Reckoning Modes	UDR: Untethered Dead Reckoning ADR: Automotive Dead Reckoning
Supported antennas	Active and passive

Table 3.7.: GNSS Specifications

The GNSS antenna port has the following specification:

Feature	Specification
Max. allowed cable length	30 m
Antenna LNA gain	15-20 dB typ, 30 dB max.
Min. distance between collocated radio transmitter antennas	20 cm
Active antenna supply	3.0 V, 100 mA max.
Connector type	FAKRA, C-Code, Blue

Table 3.8.: GNSS / GPS Antenna Port Specification

3.4.8. Pin Assignment X48

X48 is a combination connector that carries all wired signals (except antennas).

	A	B	C	D	E F G H J K	L	M
1	BRDR1-TRXP	BRDR1-TRXN	GND	CAN1-L	Reserved for Extension Module	RS232-RXD	RS232-TXD
2	BRDR2-TRXP	BRDR2-TRXN		CAN1-H		GND	GND
3	ETH1-RxP	ETH1-RxN	CAN2-T	CAN2-L		IGN (KI15)	PWR (KI30)
4	ETH1-TxP	ETH1-TxN	GND	CAN2-H		GND (VM1)	GND (VM2)

Figure 3.3.: Pin Assignment X48

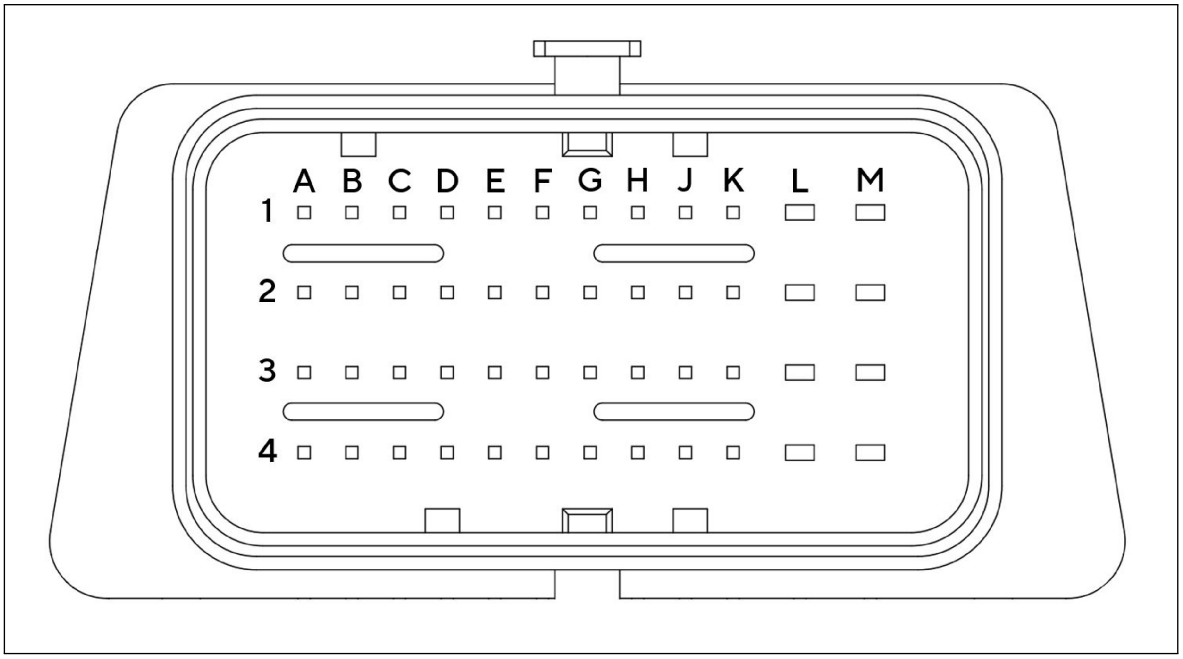

Figure 3.4.: X48 Outline

Group	Pin	Signal	Description
100 Base-T1 Interface 1	A1	BRDR1-TRXP	+ terminal for transmit/receive signal
	B1	BRDR1-TRXN	- terminal for transmit/receive signal
100 Base-T1 Interface 2	A2	BRDR2-TRXP	+ terminal for transmit/receive signal
	B2	BRDR2-TRXN	- terminal for transmit/receive signal
100 Base-Tx Interface	A3	ETH1-RxP	
	B3	ETH1-RxN	
	A4	ETH1-TxP	
	B4	ETH1-TxN	
CAN Interface 1	D1	CAN1-L	Low Level CAN bus line

Group	Pin	Signal	Description
	D2	CAN1-H	High Level CAN bus line
CAN Interface 2	D3	CAN2-L	Low Level CAN bus line
	D4	CAN2-H	High Level CAN bus line
	C3	CAN2-T	120 Ω termination resistor
EIA-232 UART Console/Debug	L1	RS232-RXD	Receive signal input
	M1	RS232-TXD	Transmit signal output
Power / Supply	M3	Power input KL30	Power entry
	L3	Ignition Input KL15	Ignition sense input (refer to chapter 4.8)
	L4	Power Ground	VM1
	M4	Power Ground	VM2
Signal Ground	C1 C2 C4 L2 M2	Ground Ground Ground Ground Ground	
Extension Module	E1- K4		Reserved for Extension Module

Table 3.9.: Pin Assignments of X48

Note:
The following mating material for X48 cable connection may be used.
Molex 0643201311, CMC48 female connector (for crimp contacts)
Molex 0643201301, CMC48 female connector cover
Molex 0643231029, crimp contact 18-20AWG for L and M rows
Molex 0643221039, crimp contact 20AWG for A to K rows

3.4.9. Power Supply

NG800 routers have a non-isolated power supply input. It has the following specifications:

Feature	Specification
Power supply nominal voltages	12 V_{DC} and 24 V_{DC}
Voltage range (absolute maximum)	9 V_{DC} to 36 V_{DC}
Power consumption	7 W (average), 10 W (max.), Power Down <2 mA @24V
Max. cable length	30 m
Cable shield	not required
Ignition	Threshold: 6.0 V / Input impedance: 400 kΩ
Reverse polarity protection	Yes

Table 3.10.: Power Specifications

Requires external fuse (recommended type: Littlefuse ATOF Blade Fuse, 32 V, 3 A, 0287003.PXCN) Minimal cable cross section: 0.75 mm2 (AWG 20) You may also refer to chapter 4.8.

Pin Assignment

Pin	Signal
M3	Power Input KL30
L3	Ignition Input KL15 (needs to be connected, refer to chapter 4.8
L4	Power Ground VM1
M4	Power Ground VM2

Table 3.11.: Pin Assignments of Power Supply

3.4.10. Fast Ethernet (100 Base-Tx Interface)

Specification

The Fast Ethernet port is specified as follows:

Feature	Specification
Isolation	1500 V_{DC}
Speed	10/100 Mbit/s
Mode	Half- & Full-Duplex
Crossover	Automatic MDI/MDI-X
Max. cable length	100 m
Cable type	CAT5e or better
Cable shield	Mandatory
Connector type	Molex CMC48

Table 3.12.: Fast Ethernet Port Specification

Pin Assignment

Pin	Signal
A3	ETH1-RxP
B3	ETH1-RxN
A4	ETH1-TxP
B4	ETH1-TxN

Table 3.13.: Pin Assignments of Fast Ethernet Connector

3.4.11. Automotive Ethernet (100 Base-T1 Interface)

Specification

The Automotive Ethernet ports are specified as follows:

Feature	Specification
Isolation	None
Speed	100 Mbit/s
Mode	Full-Duplex
Max. cable length	15 m

Feature	Specification
Cable type	twisted pair, i.e. KROCAR 64996795, 2x 0.13 mm^2
Cable shield	Unshielded
Connector type	Molex CMC48

Table 3.14.: Automotive Ethernet Port Specification

Pin Assignment 100 Base-T1 Interface 1

A1	BRDR1-TRXP	+ terminal for transmit/receive signal
B1	BRDR1-TRXN	- terminal for transmit/receive signal

Table 3.15.: Pin Assignments of Automotive Ethernet Port 1

Pin Assignment 100 Base-T1 Interface 2

A2	BRDR2-TRXP	+ terminal for transmit/receive signal
B2	BRDR2-TRXN	- terminal for transmit/receive signal

Table 3.16.: Pin Assignments of Automotive Ethernet Port 2

3.4.12. 2x CAN Interface

The CAN interfaces have the following specifications:

Feature	Specification
Features	2x CAN V2.0B
Signals	CANH, CANL
Signal Level	High > 2.75 V_{DC}, low < 2.0 V_{DC}
Bitrate	Up to 1 Mbit/s
Termination	Both ports have 6 kΩ (weak termination) CAN2 has configurable 120 Ω termination
Bus access	With option Cm: Passive (read access only) With option Cn: Active (read/write access)
Max. cable length	30 m
Cable type	Twisted pair
Cable shield	Mandatory
Connector type	Molex CMC48

Table 3.17.: Specification of 2xCAN Interface

Pin Assignment

Pin	Signal	Description
D1	CAN1-L	Low Level CAN bus line
D2	CAN1-H	High Level CAN bus line
D3	CAN2-L	Low Level CAN bus line
D4	CAN2-H	High Level CAN bus line
C3	CAN2-T	120 Ω termination resistor. Connect to pin D3 to enable termination on interface.

Table 3.18.: Pin Assignments of 2xCAN Interface

Note: Cables with length >30m must be shielded.

3.4.13. Serial RS-232

The RS-232 port has the following specification (bold values show the default configuration):

Feature	Specification
Protocol	3-wire RS-232: GND, TXD, RXD
Baud rate	300, 1 200, 2 400, 4 800, 9 600, 19 200, 38 400, 57 600, **115 200**
Data bits	7 bit, **8 bit**
Parity	**none**, odd, even
Stop bits	**1**, 2
Software flow control	**none**, XON/XOFF
Hardware flow control	none
Galvanic isolation to enclosure	none
Max. cable length	3 m
Cable shield	not required
Connector type	Molex CMC48

Table 3.19.: RS-232 Port Specification

Pin Assignment

Pin	Signal	Description
L1	RS232-RXD	Receive signal input.
M1	RS232-TXD	Transmit signal output.

Table 3.20.: Pin Assignments of RS-232 Interface

4. Installation

The NG800 is designed for mounting on a wall. Please consider the safety instructions in chapter 2 and the environmental conditions in chapter 3.3.

The following precautions must be taken before installing a NG800 router:
- Avoid direct solar radiation
- Protect the device from aggressive fluids

Attention: NetModule routers are not intended for the end consumer market. The device must be installed and commissioned by a certified expert.

4.1. Installation of SIM

NG800 with IP69K protection housing cannot be opened and contains an eUICC chip (eSIM) which replaces the conventional SIM card. This embedded SIM allows the user to switch network/provider profiles per software configuration without physically exchanging a SIM card. In other words eUICC enables remote switching of SIM profiles.
For evaluation purposes NG800 can be shipped with a housing which can be opened (IP55 protection). These devices contain a Micro-SIM card connector, where a SIM card can be inserted.

Warning
- The IP55 housing may only be opened by qualified personnel.
- Please request instructions for SIM change.

4.2. Installation of the Cellular Antenna

For a reliable function of the NetModule router via the mobile network, the NetModule routers require a good signal. Use suitable remote antennas with extended cables to achieve an optimal location with a sufficient signal and to maintain the distances to other antennas (at least 20cm to each other). The antenna manufacturer's instructions must be observed."
Keep in mind that effects caused by Faraday cages such as large metal surfaces (elevators, machine housings, etc.), close meshed iron constructions and others may reduce signal reception significantly.
The antenna or antenna cable has to be mounted to the MOB ports A1 and A2. 4G-LTE antennas require both the main and auxiliary ports to be connected.

Attention:
When installing the antenna be sure to observe chapter 2

4.3. Installation of the WLAN Antennas

WLAN antennas must be mounted to the connectors of WLAN ports A3 and A4. The number of attached antennas can be configured in the software. If only one antenna is used, it must be attached to port A3. However, for better diversity and thus better throughput and coverage, we highly recommend using two antennas. Only use antennas with cables shorter than 3 meters.

Attention:
When installing the antenna be sure to observe chapter 2

4.4. Installation of the Bluetooth Antenna

The Bluetooth antenna must be mounted to the connector BT port A3. Only use antennas with cables shorter than 3 meters.

4.5. Installation of the GNSS Antenna

The GNSS antenna must be mounted to the connector GNSS. Whether the antenna is an active or passive GNSS antenna has to be configured in the software. We recommend active GNSS antennas for highly accurate GNSS tracking.

Attention:
When installing the antenna be sure to observe chapter 2

4.6. Installation of the Local Area Network / Fast Ethernet

Please refer to 3.4.10.
By default, the gateway is configured as a DHCP server and has the default IP address 192.168.1.1.

Attention:
Only a shielded Ethernet cable may be used.

4.7. Installation of the Automotive Ethernet

Please refer to 3.4.11

Attention:
Only a twisted pair cable may be used.

4.8. Installation of the Power Supply & Delayed Power Off

The gateway can be powered with an external source supplying between 12 V_{DC} or 24 V_{DC}. It is to be used with a certified (CE or equivalent) power supply, which must have a limited and SELV circuit output. The power supply may also be a vehicle battery. It must be ensured by installation that the input current of the gateway cannot exceed 3 A. This can be accomplished by using a 3 A fuse. This fuse must be installed close to the power supply in order to protect the power supply cable (which otherwise could heat up significantly e.g. due to a short circuit and as a result damage its isolation). You may also refer to chapter 3.4.9.

Attention: Only CE-compliant power supplies with a current-limited SELV output voltage range may be used with the NetModule gateway. A battery may be used. Requires external fuse (recommended type: Littlefuse ATOF Blade Fuse, 32 V, 3 A,0287003.PXCN). Minimal wire cross section: 0.75 mm^2 (AWG 20).

When no "delayed power off" is required, connect both ignition input pin L3 and power input pin M3 to the supply voltage. When using the "delayed power off" function, the ignition pin L3 must be connected to the ignition circuit of the vehicle instead. You can enable ignition sense and configure the "delayed power off" in the WebManager System menu. Using this feature, the router powers off for a defined time (SW configurable) after the vehicle is turned off, instead of an immediate shut down. You may also refer to chapters 3.4.8 and 3.4.9.

Attention: Ignition pin L3 needs to be connected. Connect it to power supply or ignition circuit of the vehicle.