Let’s Get Started

Google Meet | Lenovo

Viking Booklet Mechanical_01a.indd 1 7/22/20 2:52 PM

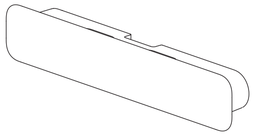

1x

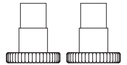

2x

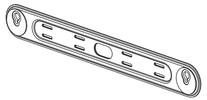

1x

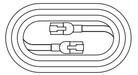

1x

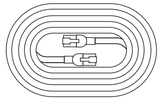

1x

4x

1x

1x

1x

Viking Booklet Mechanical_01a.indd 2-3

7/22/20 2:52 PM

1

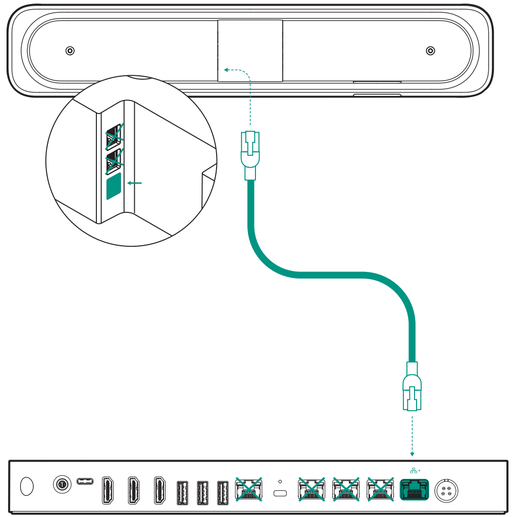

2

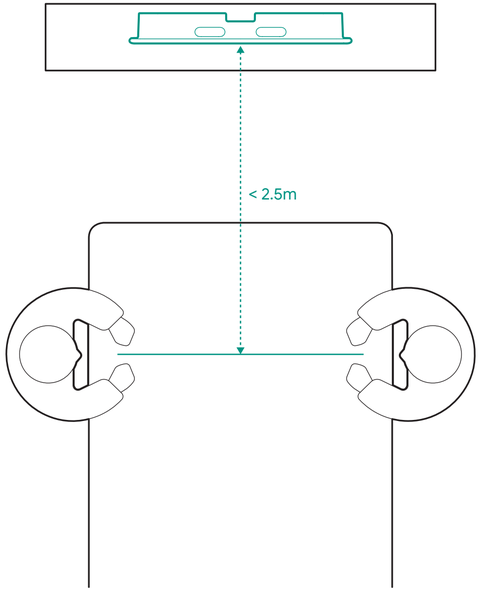

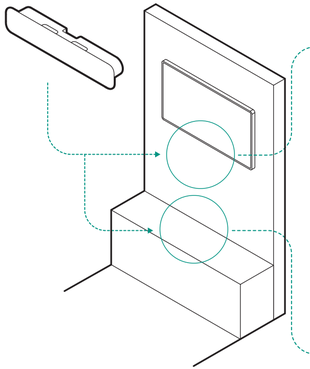

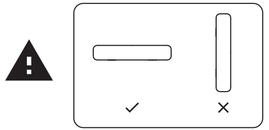

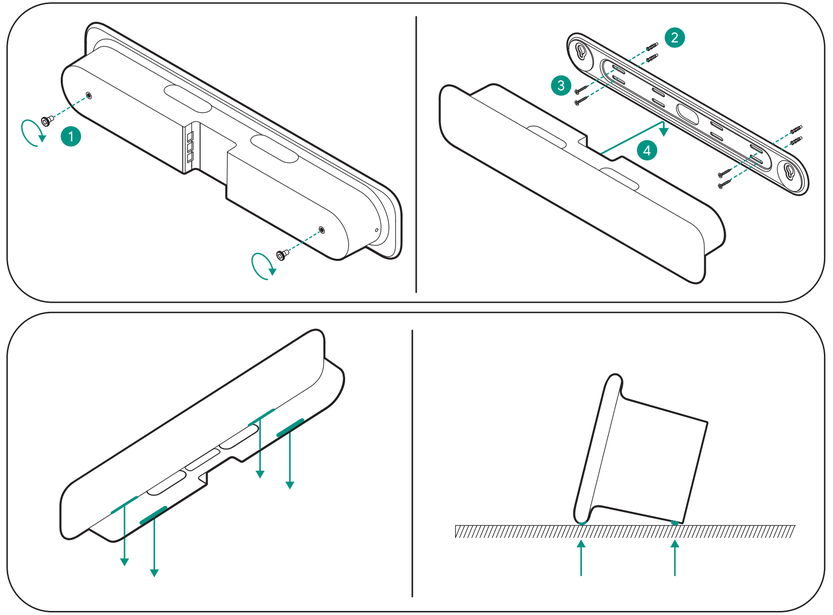

Viking Booklet Mechanical_01a.indd 4-5

7/22/20 2:52 PM

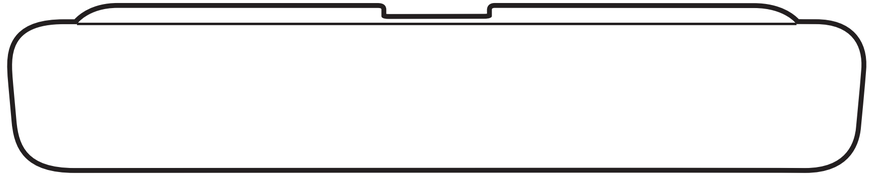

hardware.meet/start

Viking Booklet Mechanical_01a.indd 6-7 7/22/20 2:52 PM

Smart Audio Bar (GIV10L)

Safety and Warranty Guide

Google Meet | Lenovo

LIMITED AND RESTRICTED RIGHTS NOTICE: If data or software is delivered pursuant to a General Services Administration "GSA" contract, use, reproduction, or disclosure is subject to restrictions set forth in Contract No. GS-35F-05925. GOOGLE, the GOOGLE logo, GOOGLE MEET, and the GOOGLE MEET logo are trademarks of Google LLC. All other trademarks are the property of their respective owners. © 2020 Google LLC. LENOVO and the LENOVO logo are trademarks of Lenovo. All other trademarks are the property of their respective owners. © 2020 Lenovo. First Edition (July 2020) © Copyright Google LLC 2020. © Copyright Lenovo 2020. Printed in China

https://smartsupport.lenovo.com/Reduce

Reduce | Reuse | Recycle

https//smartsupport.lenovo.com/contactus

https://smartsupport.lenovo.com/supportphonelist

https://pcsupport.lenovo.com/warrantylookup

Read and follow all instructions in the documentation before you operate your system.

Chapter 1: Safety Information

Plastic bag notice

DANGER: Plastic bags can be dangerous. Keep plastic bags away from babies and children to avoid danger of suffocation.

Important Notes

- Familiarize yourself with the port layout on the back of the Smart Audio Bar.
- Connect the Smart Audio Bar power in port to the matching port on the Meet Compute System.
- The Smart Audio Bar should be placed on a level surface below your display.
- Rubber feet of the Smart Audio Bar should touch surface for correct orientation

Attention

- This device is intended for use in ambient temperatures between 0°C and 35°C (32°F and 95°F)
- Avoid using or storing next to a heat source, in direct sunlight or near water.

Wall Mount

- The device can only be mounted in horizontal orientation
- The device shall not be mounted higher than 2m from the floor or shall not be mounted higher than 75cm from a flat surface
- Make sure your device is turned off before installing your mount kit

Warnings Do not:

- Throw or immerse into water
- Heat to more than 100°C (212°F)
- Repair or disassemble
- Leave in an extremely low air pressure environment
- Leave in an extremely high-temperature environment

Input Rating:

- Voltage: 54V–
- Current: 1.76A

Chapter 2: Compliance Information

North America

Federal Communication Commission Notice

This equipment has been tested and found to comply with the limits for a Class A digital device, pursuant to part 15 of the FCC Rules. These limits are designed to provide reasonable protection against harmful interference when the equipment is operated in a commercial environment. This equipment generates, uses and can radiate radio frequency energy and, if not installed and used in accordance with the instructions, may cause harmful interference to radio communications. Operation of this equipment in a residential area is likely to cause harmful interference in which case the user will be required to correct the interference at his own expense.

This device complies with Part 15 of the FCC Rules. Operation is subject to the following two conditions: 1. this device may not cause harmful interference. 2. This device must accept any interference received, including interference that may cause undesired operation.

Changes or modification not expressly approved by the grantee of this device could void the user's authority to operate the equipment.

Innovation, Science and Economic Development (ISED) Notice

This device complies with Innovation, Science and Economic Development Canada (ISED) licence-exempt RSS standard(s).

Operation is subject to the following two conditions: (1) this device may not cause interference, and (2) this device must accept any interference, including interference that may cause undesired operation of the device.

Avis d'Innovation, Sciences et Développement économique Canada (ISED) Le présent appareil est conforme aux CNR d'ISED applicables aux appareils radio exempts de licence. L'exploitation est autorisée aux deux conditions suivantes: (1) l'appareil ne doit pas produire de brouillage, et(2) l'appareil doit accepter tout brouillage radioélec- trique subi, même si le brouillage est susceptible d'en compromettre le fonctionnement.

CAN ICES-3 (A)/NMB-3(A)

Radio Frequency Exposure

This equipment complies with FCC radiation exposure limits set forth for an uncontrolled environment. This equipment should be installed and operated with minimum distance 20cm between the radiator & your body. This transmitter must not be co-located or operated with any other antenna or transmitter.

ISED Radiation Exposure

This equipment complies with ISED radiation exposure limits set forth for an uncontrolled environment. This equipment should be installed and operated with minimum distance 20cm between the radiator & your body. This transmitter must not be co-located or operated with any other antenna or transmitter.

Le rayonnement de la classe b respecte ISED fixaient un environnement non contrôles et mise en oeuvre de ce matériel devrait avec échangeur distance minimale entre 20 cm ton corps. Lanceurs ou ne peurvent pas coexister cette antenne ou capteurs ave d'autres.

Electromagnetic emission notices

This device has been tested and found to comply with the limits for a Class A digital device.

European Union conformity

EU contact: Lenovo (Slovakia),
Landererova 12, 811 09 Bratislava,
Slovakia

Compliance with the Radio Equipment Directive

Hereby, Lenovo (Singapore) Pte. Ltd., declares that the radio equipment type GIV10L is in compliance with Directive 2014/53/EU.

The full text of the system EU declaration of conformity is available at the following Internet address:
https://www.lenovo.com/us/en/compliance/eu-doc

This radio equipment operates with the following frequency bands and maximum radio-frequency power:

Function	Frequency	Maximum Output Power (EIRP)
Bluetooth	2402-2480MHz	1.56dBm

Radio frequency compliance information

Product models equipped with wireless communications comply with the radio frequency and safety standards of any country or region in which it has been approved for wireless use.

Regional Notices

Brazil

Este produto está homologado pela ANATEL, de acordo com a Resolução n°. 242/2000 e atende aos requisitos técnicos aplicáveis. Este equipamento não tem direito à proteção contra interferência prejudicial e não pode causar interferência em sistemas devida- mente autorizados. Para maiores informações, consulte o site da ANATEL – www.anatel.gov.br

Japan

この装置は、クラスA情報技術装置です。この装置を家庭環境で使用すると電波妨害を引き起こすことがあります。この場合には使用者が適切な対策を講ずるよう要求されることがあります。 VCCI－A

South Korea

명칭/모델명: 스마트 컨퍼런스 스피커 / GIV10L
인증번호: R-R-LVK-GIV10L
제조 년월일 : 레퍼런스 제품 라벨
신청자: 레퍼런스 제품 라벨
제조자/제조국 : Lenovo 중국

이 기기는 업무용(A급)으로 전자파적합기기로서 판매자 또는 사용자는 이 점을 주의하시기 바라며, 가정외의 지역에서 사용하는 것을 목적으로 합니다.

Taiwan

低功率電波輻射性電機管理辦法

第十二條:

經型式認證合格之低功率射頻電機，非經許可，公司、商號或使用者均不得擅自變更頻率、加大功率或變更原設計之特性及功能。

低功率射頻電機之使用不得影響飛航安全及干擾合法通信；經發現有干擾現象時，應立即停用，並改善至無干擾時方得繼續使用。

前項合法通信，指依電信法規定作業之無線電通信。低功率射頻電機須忍受合法通信或工業、科學及醫療用電波輻射性電機設備之干擾。

無線資訊傳輸設備避免影響附近雷達系統之操作

警告使用者：此為甲類資訊技術設備，於居住環境中使用時，可能會造成 射頻擾動，在此種情況下，使用者會被要求採取某些適當的 對策

Chapter 3: Environmental Information

Recycling and environmental information

This section shows the recycling and environmental information for specific countries or regions.

Lenovo encourages owners of information technology (IT) equipment to responsibly recycle their equipment when it is no longer needed. Lenovo offers a variety of programs and services to assist equipment owners in recycling their IT products. For information on recycling Lenovo products, go to https://www.lenovo.com/recycling

For additional recycling and environmental statements, refer to your User Guide. The latest environmental information about our products is available at https://www.lenovo.com/ecodeclaration.

Disposal and Recycling

Dispose of the battery and accessories in accordance with local ordinances or regulations. The following statement applies to users in the state of California, U.S.A.

California Perchlorate Information:

Products containing manganese dioxide lithium coin-cell batteries may contain perchlorate. Perchlorate Material - special handling may apply, see https://www.dtsc.ca.gov/hazardouswaste/perchlorate

Important battery and WEEE information

The WEEE Directive symbols above means that according to local laws and regulations your product and its battery(ies) should be disposed of separately from household waste. When this product reaches its end of life, take it to a collection point designated by local authorities for safe disposal or recycling. The separate collection and recycling of your product, its electrical accessories, and its battery(ies) will help conserve natural resources, protect human health, and help the environment.

Restriction of Hazardous Substances (RoHS) Directive

European Union RoHS

This Lenovo product, with included parts (cables, cords, and so on) meets the requirements of Directive 2015/863/EU on the restriction of the use of certain hazardous substances in electrical and electronic equipment (RoHS 3).

For more information about Lenovo worldwide compliance on RoHS, go to: https://www.lenovo.com/rohs-communication

Regional Notices Brazil

Descarte de um Produto Lenovo Fora de Uso

Equipamentos elétricos e eletrônicos não devem ser descartados em lixo comum, mas enviados à pontos de coleta, autorizados pelo fabricante do produto para que sejam encaminhados e processados por empresas especializadas no manuseio de resíduos industriais, devidamente certificadas pelos orgãos ambientais, de acordo com a legislação local.

A Lenovo possui um canal específico para auxiliá-lo no descarte desses produtos. Caso você possua um produto Lenovo em situação de descarte, ligue para o nosso SAC ou encaminhe um e-mail para: reciclar@lenovo.com, informando o modelo, número de série e cidade, a fim de enviarmos as instruções para o correto descarte do seu produto Lenovo.

Japan

日本でのリサイクルまたは廃棄についての詳細は、以下のURLを参照して下さい:

Recycling and disposal information for Japan is available at following URL: https://www.lenovo.com/recycling/japan

Taiwan

所有 Lenovo 產品均滿足台灣 RoHS 要求。

設備名稱：智能會議音箱 Equipment name：Smart Audio Bar	型號（型式）：GIV10L Type designation (Type)：GIV10L

單元 Unit	限用物質及其化學符號 Restricted substances and its chemical symbols					
	鉛 Lead (Pb)	汞 Mercury (Hg)	鎘 Cadmium (Cd)	六價鉻 Hexavalent chromium (Cr^{+6})	多溴聯苯 Polybrominated biphenyl (PBB)	多溴二苯醚 Polybrominated diphenyl ether (PBDE)
印刷電路板	-	○	○	○	○	○
塑膠外殼	○	○	○	○	○	○
散熱片	○	○	○	○	○	○
喇叭	○	○	○	○	○	○
線材	○	○	○	○	○	○

備考 1.“超出 0.1 wt %”及“超出 0.01 wt %”係指限用物質之百分比含量超出百分比含量基準值。
Note 1：“Exceeding 0.1 wt %” and “exceeding 0.01 wt %” indicate that the percentage content of the restricted substance exceeds the reference percentage value of presence condition.
備考 2.“○”係指該項限用物質之百分比含量未超出百分比含量基準值。
Note 2：“○” indicates that the percentage content of the restricted substance does not exceed the percentage of reference value of presence.
備考 3.“－”係指該項限用物質為排除項目。
Note 3：The “–” indicates that the restricted substance corresponds to the exemption.

Additional Compliance and Environmental Notices

Malaysia

CIDF15000051

Singapore

Complies with IMDA Standards DB102306

Thailand