RF Test Report

Applicant	:	Inventec Appliances Corp.
Applicant Address	:	37 Wugong 5th road, New Taipei Industrial Park, Wugu District, New Taipei City Taiwan
Product Name	:	Chiline Blood Pressure Monitor
Trade Name	:	Chiline Chiline
Model Number	:	J21A
Applicable Standard	:	FCC 47 CFR PART 15 SUBPART C ANSI C63.10:2013
Received Date	:	Oct. 19, 2022
Test Period	:	Oct. 19 ~ Oct. 27, 2022
Issued Date	:	Dec. 21, 2022

Issued by

Eurofins E&E Wireless Taiwan Co., Ltd.
No. 140-1, Changan Street, Bade District,
Taoyuan City 334025, Taiwan (R.O.C.)
Tel：+886-3-2710188 / Fax：+886-3-2710190

Taiwan Accreditation Foundation accreditation number: 1330
Frequency Range: 9 kHz to 325 GHz (Bade test site)
Frequency Range: 9 kHz to 40 GHz (Wugu test site)
Test Firm MRA designation number: TW0010

Note:
1.The test results are valid only for samples provided by customers and under the test conditions described in this report.
2.This report shall not be reproduced except in full, without the written approval of Eurofins E&E Wireless Taiwan Co., Ltd.
3.The relevant information is provided by customers in this test report. According to the correctness, appropriateness or completeness of the information provided by the customer, if there is any doubt or error in the information which affects the validity of the test results, the laboratory does not take the responsibility.

Revision History

Version	Issued Date	Revisions	Revised By
00	Dec. 21, 2022	Initial Issue	Abby Huang

Verification of Compliance

Applicant	:	Inventec Appliances Corp.
Product Name	:	Chiline Blood Pressure Monitor
Trade Name	:	Chiline Chiline
Model Number	:	J21A
FCC ID	:	POTJ21A
Applicable Standard	:	FCC 47 CFR PART 15 SUBPART C ANSI C63.10:2013
Test Result	:	Complied
Performing Lab.	:	Eurofins E&E Wireless Taiwan Co., Ltd. No. 140-1, Changan Street, Bade District, Taoyuan City 334025, Taiwan (R.O.C.) Tel：+886-3-2710188 / Fax：+886-3-2710190 Taiwan Accreditation Foundation accreditation number: 1330

Testing Laboratory 1330

Eurofins E&E Wireless Taiwan Co., Ltd. tested the above equipment in accordance with the requirements set forth in the above standards. All indications of Pass/Fail in this report are opinions expressed by Eurofins E&E Wireless Taiwan Co., Ltd. based on interpretations and/or observations of test results. The test results show that the equipment tested is capable of demonstrating compliance with the requirements as documented in this report.

Approved By : Kai Yu Yang

TABLE OF CONTENTS

1 General Information 5
1.1. Summary of Test Result 5
1.2. Testing Location 6
1.3. Measurement Uncertainty 6
2 EUT Description 7
3 Test Methodology 8
3.1. Mode of Operation 8
3.2. EUT Test Step 8
3.3. Configuration of Test System Details 9
3.4. Test Instruments 11
3.5. Test Site Environment 14
4 Measurement Procedure 15
4.1. AC Power Line Conducted Emission Measurement 15
4.2. Radiated Emission Measurement 17
4.3. Maximum Conducted Output Power Measurement 21
4.4. 6 dB RF Bandwidth Measurement 22
4.5. Maximum Power Density Measurement 23
4.6. Out of Band Conducted Emissions Measurement 24
4.7. Antenna Measurement 24
5 Test Results 25
5.1. Conducted Emission 25
5.2. Conducted Test Results 27
5.3. Radiated Emission Measurement 28

Appendix A. Test Data
Appendix B. Test Plots
Appendix C. Test Setup Photographs

1 General Information

1.1. Summary of Test Result

Standard	Item	Result	Remark
15.207	AC Power Conducted Emission	PASS	-----
15.247(d)	Transmitter Radiated Emissions	PASS	-----
15.247(b)(3)	Max. Output Power	PASS	-----
15.247(a)(2)	6 dB RF Bandwidth	PASS	-----
15.247(e)	Maximum Power Spectral Density	PASS	-----
15.247(d)	Out of Band Conducted Spurious Emission	PASS	-----
15.203	Antenna Requirement	PASS	-----

Decision Rule

■ Uncertainty is not included.

□ Uncertainty is included.

Standard	Description
CFR47, Part 15, Subpart C	Intentional Radiators
ANSI C63. 10: 2013	American National Standard of Procedures for Compliance Testing of Unlicensed Wireless Devices
KDB 558074 D01 15.247 Meas Guidance v05r02	GUIDANCE FOR COMPLIANCE MEASUREMENTS ON DIGITAL TRANSMISSION SYSTEM, FREQUENCY HOPPING SPREAD SPECTRUM SYSTEM, AND HYBRID SYSTEM DEVICES OPERATING UNDER SECTION 15.247 OF THE FCC RULES

1.2. Testing Location

Lab Name: Eurofins E&E Wireless Taiwan Co., Ltd.

Site Address: ■ No. 140-1, Changan Street, Bade District, Taoyuan City 334025, Taiwan (R.O.C.)

Site Address: ☐ No. 2, Wuquan 5th Rd. Wugu Dist., New Taipei City, Taiwan (R.O.C.)

1.3. Measurement Uncertainty

Test Item	Frequency Range	Uncertainty
Conducted Emission	150 kHz ~ 30 MHz	2.7 dB
Radiated Emission	9 kHz ~ 30 MHz	2.2 dB
	30 MHz ~ 1000 MHz	5.1 dB
	1000 MHz ~ 18000 MHz	5.2 dB
	18000 MHz ~ 26500 MHz	4.6 dB
	26500 MHz ~ 40000 MHz	4.6 dB
Conducted Output Power	1.1 dB	
RF Bandwidth	4.7 %	
Power Spectral Density	1.1 dB	

2 EUT Description

Applicant	Inventec Appliances Corp. 37 Wugong 5th road, New Taipei Industrial Park, Wugu District, New Taipei City Taiwan	
Product Name	Chiline Blood Pressure Monitor	
Trade Name	Chiline Chiline	
Model No.	J21A	
FCC ID	POTJ21A	
Frequency Range	2402 ~ 2480 MHz	
Modulation Type	GFSK	
Operate Temp. Range	10 ~ 40 ℃	
EUT Power Rating	5.0 Vdc, 1.0 A	
Antenna information	Type	Max. Gain (dBi)
	Chip Antenna	5.19
RF Output Power	0.00132 W	

3 Test Methodology

3.1. Mode of Operation

Decision of Test Eurofins has verified the construction and function in typical operation. All the test modes were carried out with the EUT in normal operation, which was shown in this test report and defined as:

Test Mode
Transmit Mode
BLE 1M

Software used to control the EUT for staying in continuous transmitting mode was programmed.

After verification, all tests were carried out with the worst case test modes.

Note: The EUT was programmed to be in continuously transmitting mode and the transmit duty cycle is not less than 98 %.

3.2. EUT Test Step

1	Setup the EUT shown on “Configuration of Test System Details”.
2	Turn on the power of all equipment.
3	Turn on TX function.
4	EUT run test program.

3.3. Configuration of Test System Details

CE & Radiated Emission Below 1GHz

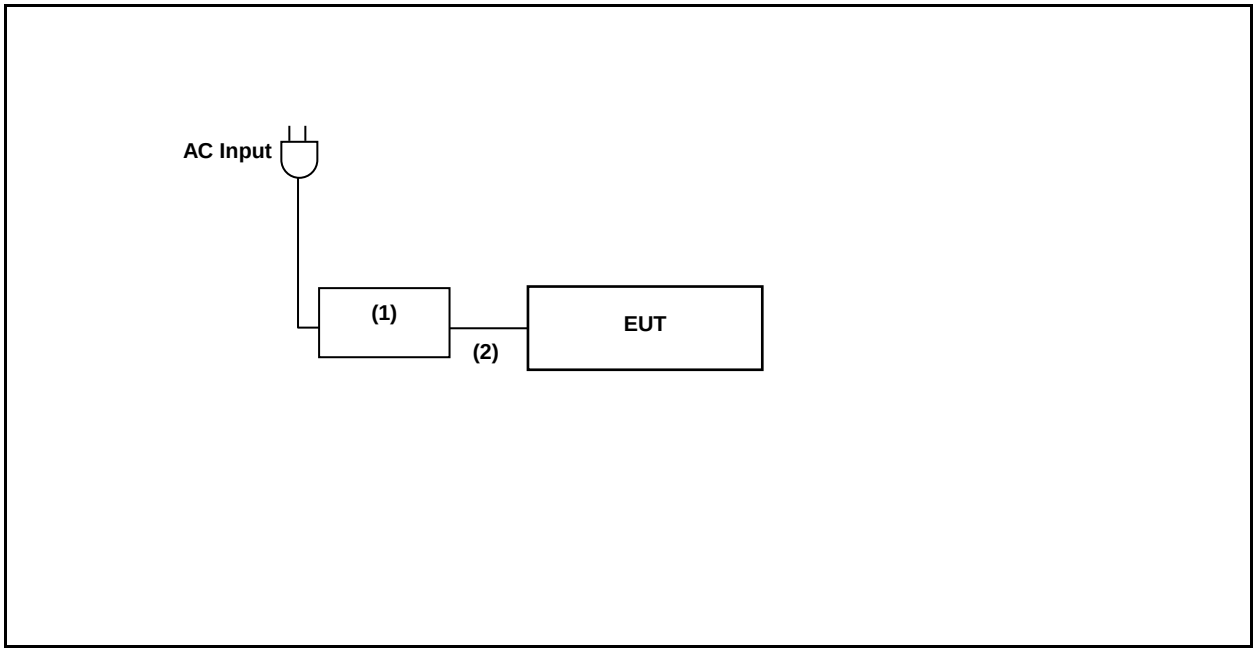

Radiated Emission Above 1GHz

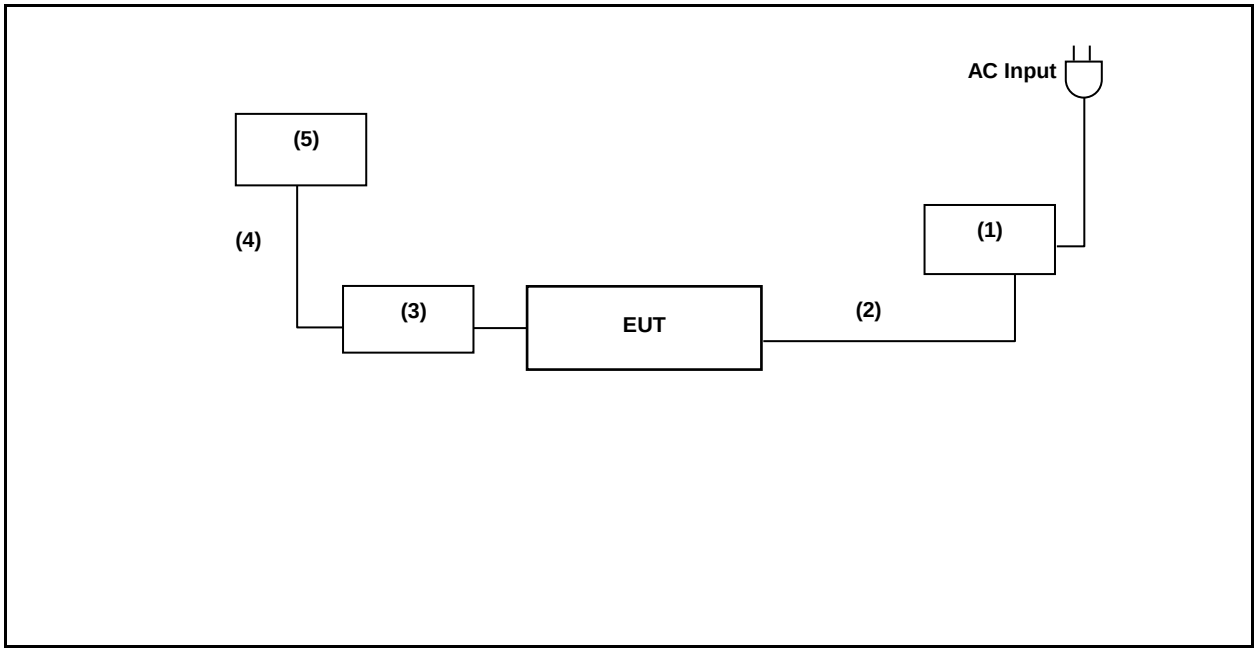

Devices Description					
Product		Manufacturer	Model Number	Serial Number	Power Cord
(1)	Medical Power Supply	ADAPTER TECH.	ATM012T-W050VU	---	---
(2)	USB CABLE	UTE	61401. 12A40	---	---
(3)	Fixture	Chiline	Type C to UART	---	---
(4)	USB-SPI Cable	CSR	USB-SPI programmer	---	---
(5)	NoteBook	acer	NXEG8TA008109033BD3400	---	---

3.4. Test Instruments

For Conducted Emission
Test Period: Oct. 19, 2022
Testing Engineer: Jayson Hsieh

Test Site		Conduction01-BD				
Use	Equipment	Manufacturer	Model Number	Serial Number	Cal. Date	Cal. Period
☒	Test Receiver	R&S	ESCI	100367	May 19, 2022	1 year
☐	Test Receiver	R&S	ESCI	100722	Nov. 02, 2021	1 year
☐	Test Receiver	R&S	ESCI	101000	Nov. 26, 2021	1 year
☒	LISN	R&S	ENV216	101040	Apr. 06, 2022	1 year
☐	LISN	R&S	ENV216	101140	Jan. 25, 2022	1 year
☒	RF Cable	Woken	00100D1380194M	TE-02-03	May 27, 2022	1 year
☒	Software	EZ EMC	1.1.4.3	N/A	N.C.R.	---

Note: N.C.R. = No Calibration Request.

For Radiated Emissions
Test Period: Oct. 27, 2022
Testing Engineer: Hung Chou

Test Site		96603-BD				
Radiation test sites		Semi Anechoic Room				
Use	Equipment	Manufacturer	Model Number	Serial Number	Cal. Date	Cal. Period
☐	Spectrum Analyzer (10 Hz~44 GHz)	Keysight	N9010A	MY52221312	Jan. 13, 2022	1 year
☐	Spectrum Analyzer (3 Hz~50 GHz)	Agilent	N9030A	MY53120541	Jan. 05, 2022	1 year
☐	Spectrum Analyzer (2 Hz~50 GHz)	Keysight	N9030B	MY57143537	Apr. 14, 2022	1 year
☒	Spectrum Analyzer (10 Hz~44 GHz)	Keysight	N9020B	MY60112363	Feb. 27, 2022	1 year
☒	Amplifier (100 kHz~1.3 GHz)	Agilent	8447D	2944A11119	Jan. 14, 2022	1 year
☐	Amplifier (100 kHz~1.3 GHz)	Agilent	8447D	2944A10961	Jul. 07, 2022	1 year
☐	Broadband Amplifier (100 kHz~1 GHz)	Titan	T0910E00014330A1F	001	Jul. 21, 2022	1 year
☐	Amplifier (1 GHz~26.5 GHz)	Agilent	8449B	3008A02237	Oct. 21, 2021	1 year
☒	Broadband Amplifier (1 GHz~26.5 GHz)	Titan	T0912E01263025A1F	002	Jul. 21, 2022	1 year
☐	Preamplifier (26.5 GHz~40 GHz)	EMCI	EMC2654045	980028	Sep. 02, 2022	1 year
☒	Loop Antenna (9 kHz~30 MHz)	COM-POWER CORPORATION	AL-130	121014	Mar. 28, 2022	1 year
☐	Active Loop Antenna (9 kHz~30 MHz)	Schwarzbeck Mess-Elektronik	FMZB 1513-60	1513-60-031	Feb. 17, 2022	1 year
☐	Trilog Broadband Antenna (30 kHz~1 GHz)	Schwarzbeck Mess-Elektronik	VULB9168	01146	Jul. 22, 2022	1 year
☒	Trilog Broadband Antenna (30 kHz~1 GHz)	Schwarzbeck Mess-Elektronik	VULB9168	416	Nov. 17, 2021	1 year
☒	Broadband Horn Antenna (1 GHz~18 GHz)	Schwarzbeck Mess-Elektronik	9120D	02207	Jul. 13, 2022	1 year
☐	Broadband Horn Antenna (1 GHz~18 GHz)	Schwarzbeck Mess-Elektronik	9120D	9120D-550	Aug. 25, 2022	1 year

Note: N.C.R. = No Calibration Request.

For Radiated Emissions
Test Period: Oct. 27, 2022
Testing Engineer: Hung Chou

Test Site		96603-BD				
Radiation test sites		Semi Anechoic Room				
Use	Equipment	Manufacturer	Model Number	Serial Number	Cal. Date	Cal. Period
☒	Broadband Horn Antenna (18 GHz~40 GHz)	Schwarzbeck Mess-Elektronik	9170	9170-320	Aug. 25, 2022	1 year
☐	Horn Antenna (18 GHz~40 GHz)	ETS	3116	00086467	Dec. 03, 2021	1 year
☐	RF Cable	EMCI	EMC104-N-N-6000	TE01-1	Feb. 18, 2022	1 year
☐	Microwave Cable	EMCI	EMC104-SM-SM-13000	170814	Feb. 18, 2022	1 year
☐	Microwave Cable	EMCI	EMC102-KM-KM-14000	151001	Feb. 18, 2022	1 year
☒	Coaxial Cable	Titan	T0710AT327A10A100	J11005	Aug. 04, 2022	1 year
☒	Coaxial Cable	Titan	T0710AT327A10A900	J11004	Aug. 04, 2022	1 year
☒	Coaxial Cable	Titan	CFD400NL-LW	001	Aug. 04, 2022	1 year
☐	Bluetooth Tester	R&S	CBT	100350	Mar. 17, 2021	2 years
☐	Wireless Connectivity Tester	R&S	CMW270	102208	Jun. 01, 2022	1 year
☐	Power Supply	KEITHLEY	2303	4045290	Jan. 19, 2022	1 year
☒	Software	EZ EMC	1.1.4.4	N/A	N.C.R.	---

Note: N.C.R. = No Calibration Request.

For Conducted
Test Period: Oct. 27, 2022
Testing Engineer: Brian Lin

Test Site		RF01-BD				
Use	Equipment	Manufacturer	Model Number	Serial Number	Cal. Date	Cal. Period
☐	Power Sensor	Anritsu	MA2411B	1126022	Sep. 04, 2022	1 year
☐	Power Meter	Anritsu	ML2495A	1135009	Sep. 04, 2022	1 year
☒	Power Sensor	Agilent	N1921A	MY45241957	Dec. 06, 2021	1 year
☒	Power Meter	Agilent	N1911A	MY45101619	Dec. 06, 2021	1 year
☒	Spectrum Analyzer (10 Hz~26.5 GHz)	Keysight	N9010B	MY59071418	Mar. 16, 2022	1 year
☐	Spectrum Analyzer (9 kHz~26.5 GHz)	Agilent	N9010A	MY48030518	Jul. 21, 2022	1 year
☐	Spectrum Analyzer (20 Hz~26.5 GHz)	Agilent	N9020A	US47520902	Sep. 01, 2022	1 year
☐	Spectrum Analyzer (3 Hz~50 GHz)	Agilent	N9030A	MY53120541	Jan. 05, 2022	1 year
☐	Temperature & Humidity Chamber	TAICHY	MHU-225LA	980729	Mar. 28, 2022	1 year
☐	Signal Generator	Keysight	N5182B	MY53052569	Apr. 16, 2022	1 year
☐	Signal Generator	Keysight	N5182BX07	MY59360221	Apr. 16, 2022	1 year
☐	Bluetooth Tester	R&S	CBT	100350	Mar. 17, 2021	2 years
☐	Wireless Connectivity Tester	R&S	CMW270	102208	Jun. 01, 2022	1 year
☐	Power Supply	KEITHLEY	2303	4045290	Jan. 19, 2022	1 year

Note: N.C.R. = No Calibration Request.

3.5. Test Site Environment

Items	Required (IEC 60068-1)	Actual
Temperature (°C)	15-35	20-30
Humidity (%RH)	25-75	45-75

4 Measurement Procedure

4.1. AC Power Line Conducted Emission Measurement

■ **Limit**

Frequency (MHz)	Quasi-peak	Average
0.15 - 0.5	66 to 56	56 to 46
0.50 - 5.0	56	46
5.0 - 30.0	60	50

■ **Test Setup**

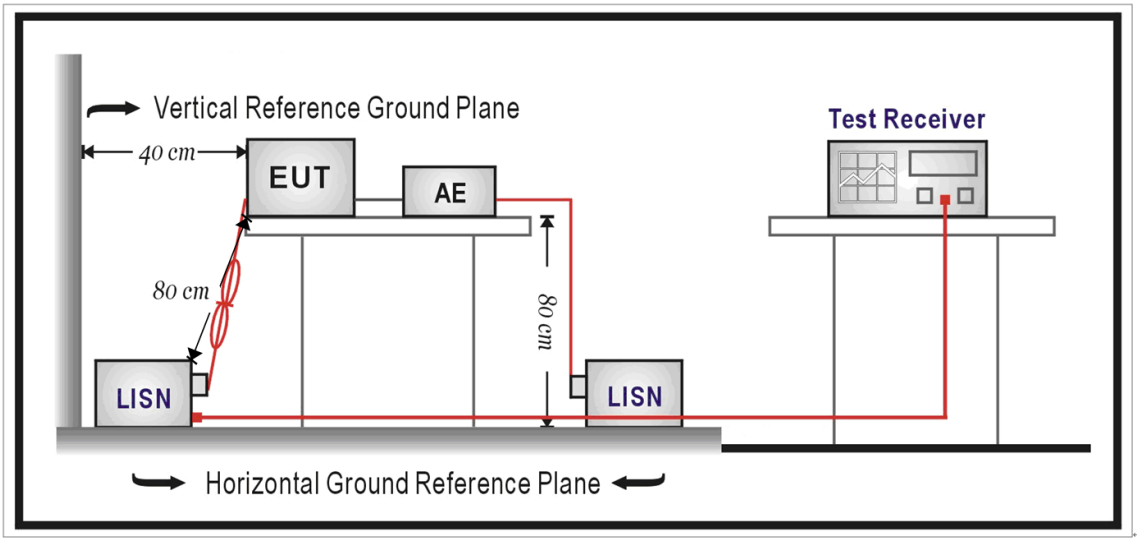

■ **Test Procedure**

The EUT and simulators are connected to the main power through a line impedance stabilization network (L.I.S.N.). This provides a 50 Ω// 50 uH coupling impedance for the measuring equipment. The peripheral devices are also connected to the main power through a LISN that provides a 50 Ω// 50 uH coupling impedance with 50 ohm termination.

Tabletop device shall be placed on a non-conducting platform, of nominal size 1 m by 1.5 m, raised 80 cm above the reference ground plane. The wall of screened room shall be located 40 cm to the rear of the EUT. Other surfaces of tabletop or floor standing EUT shall be at least 80 cm from any other ground conducting surface including one or more LISNs. For floor-standing device shall be placed under the EUT with a 12 mm insulating material.

Conducted emissions were investigated over the frequency range from 0.15 MHz to 30 MHz using a resolution bandwidth of 9 kHz. The equipment under test (EUT) shall be meet the limits in section 4.1, as applicable, including the average limit and the quasi-peak limit when using respectively, an average detector and quasi-peak detector measured in accordance with the methods described of related standard. When all of peak value were complied with quasi-peak and average limit from 150 kHz to 30 MHz then quasi-peak and average measurement was unnecessary.

The AMN shall be placed 0.8 m from the boundary of the unit under test and bonded to a ground reference plane for AMNs mounted on top of the ground reference plane. This distance is between the closest points of the AMN and the EUT. All other units of the EUT and associated equipment shall be at least 0.8 m from the AMN. If the mains power cable is longer than 1 m then the cable shall be folded back and forth at the centre of the lead to form a bundle no longer than 0.4 m. All of interconnecting cables that hang closer than 40 cm to the ground plane shall be folded back and forth in the center forming a bundle 30 cm to 40 cm long. All of EUT and AE shall be separate place more than 0.1 m. All 50 Ω ports of the LISN shall be resistively terminated into 50 Ω loads when not connected to the measuring instrument.

If the reading of the measuring receiver shows fluctuations close to the limit, the reading shall be observed for at least 15 s at each measurement frequency; the higher reading shall be recorded with the exception of any brief isolated high reading which shall be ignored.

4.2. Radiated Emission Measurement

■ **Limit**

According to §15.209(a), except as provided elsewhere in this subpart, the emissions from an intentional radiator shall not exceed the field strength levels specified in the following table:

Frequency (MHz)	Field Strength (μV/m at meter)	Measurement Distance (meters)
0.009 – 0.490	2400 / F (kHz)	300
0.490 – 1.705	24000 / F (kHz)	30
1.705 – 30.0	30	30
30 - 88	100**	3
88-216	150**	3
216-960	200**	3
Above 960	500	3

** Except as provided in paragraph (g), fundamental emissions from intentional radiators operating under this Section shall not be located in the frequency bands 54-72 MHz, 76-88 MHz, 174-216 MHz or 470-806 MHz. However, operation within these frequency bands is permitted under other sections of this Part, e.g., Sections 15.231 and 15.241.

■ **Setup**

9 kHz ~ 30 MHz

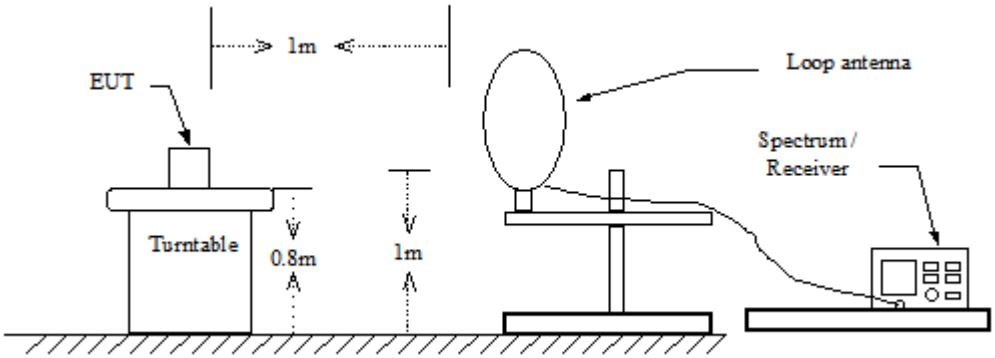

Below 1 GHz

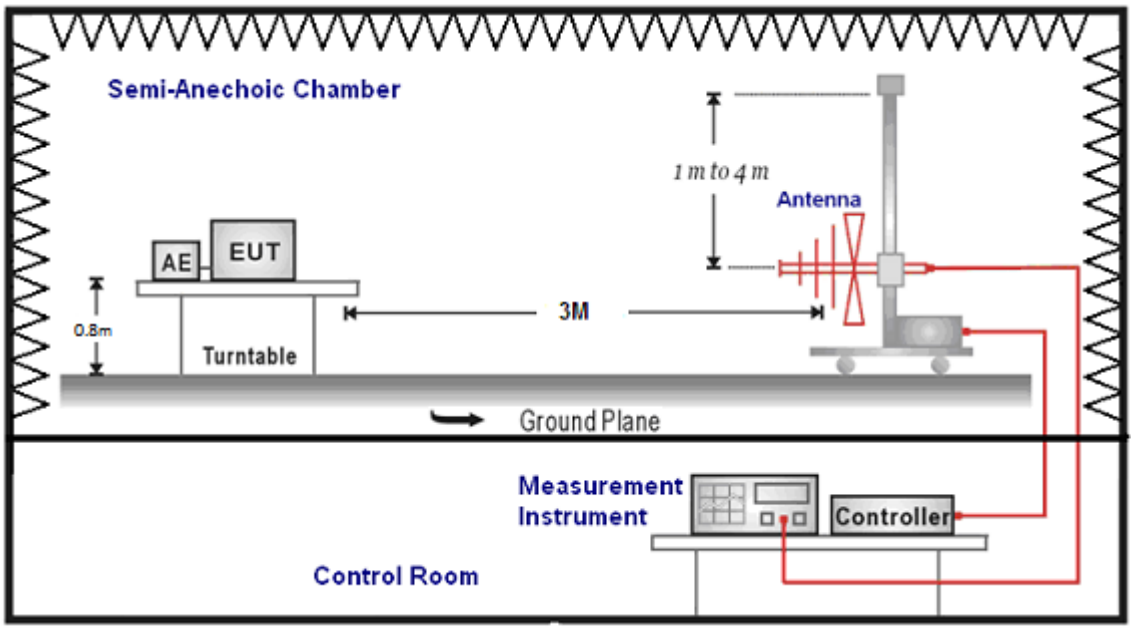

Above 1 GHz

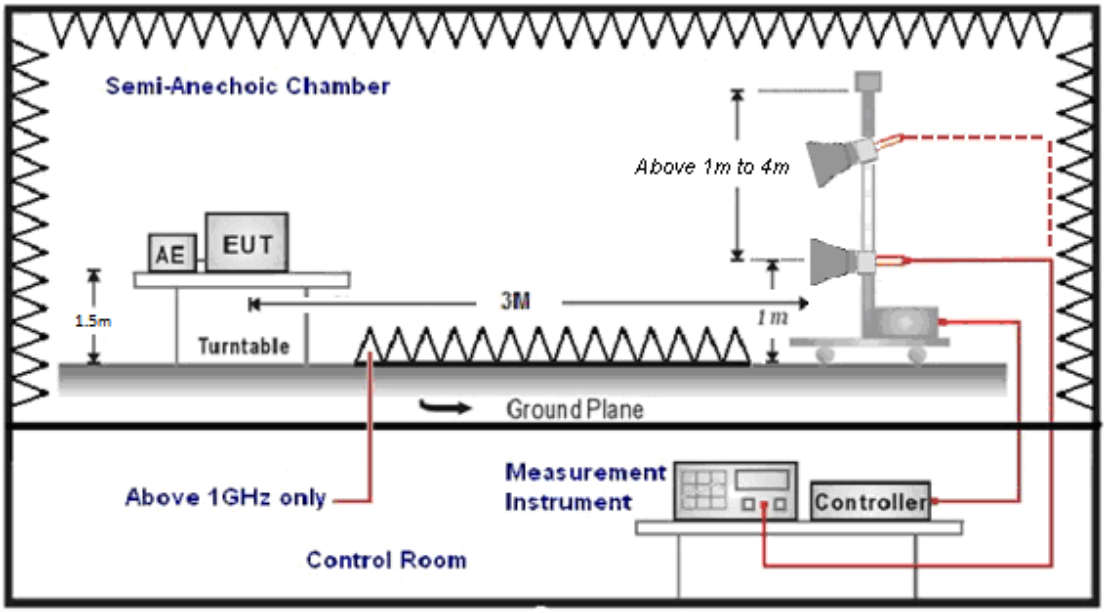

■ **Test Procedure**

Final radiation measurements were made on a three-meter, Semi Anechoic Chamber. The EUT system was placed on a nonconductive turntable which is 0.8 or 1.5 meters height, top surface 1.0 x 1.5 meter. The spectrum was examined from 250 MHz to 2.5 GHz in order to cover the whole spectrum below 10th harmonic which could generate from the EUT. During the test, EUT was set to transmit continuously & Measurements spectrum range from 9 kHz to 26.5 GHz is investigated.

For measurements below 1 GHz the resolution bandwidth is set to 100 kHz for peak detection measurements or 120 kHz for quasi-peak detection measurements. Peak detection is used unless otherwise noted as quasi-peak.

For measurements above 1 GHz the resolution bandwidth is set to 1 MHz, and then the video bandwidth is set to 3 MHz for peak measurements and 10 Hz for average measurements when Duty cycle >0.98 / 1/T for average measurements when Duty cycle <0.98. A nonconductive material surrounded the EUT to supporting the EUT for standing on tree orthogonal planes. At each condition, the EUT was rotated 360 degrees, and the antenna was raised and lowered from one to four meters to find the maximum emission levels. Measurements were taken using both horizontal and vertical antenna polarization.

SCHWARZBECK MESS-ELEKTRONIK Biconilog Antenna at 3 Meter and the SCHWARZBECK Double Ridged Guide Antenna was used in frequencies 1 –26.5 GHz at a distance of 3 meter. The antenna at an angle toward the source of the emission. All test results were extrapolated to equivalent signal at 3 meters utilizing an inverse linear distance extrapolation Factor (20 dB/decade).

For testing above 1 GHz, the emission level of the EUT in peak mode was 20 dB lower than average limit (that means the emission level in peak mode also complies with the limit in average mode), then testing will be stopped and peak values of EUT will be reported, otherwise, the emissions will be measured in average mode again and reported.

Appropriate preamplifiers were used for improving sensitivity and precautions were taken to avoid overloading or desensitizing the spectrum analyzer. No post – detector video filters were used in the test.

The spectrum analyzer's 6 dB bandwidth was set to 1 MHz, and the analyzer was operated in the peak detection mode, for frequencies both below and up 1 GHz. The average levels were obtained by subtracting the duty cycle correction factor from the peak readings.

The following procedures were used to convert the emission levels measured in decibels referenced to 1 microvolt (dBuV) into field intensity in micro volts pre meter (uV/m).

The actual field intensity in decibels referenced to 1 microvolt in to field intensity in micro colts per meter (dBuV/m).

The actual field is intensity in referenced to 1 microvolt per meter (dBuV/m) is determined by algebraically adding the measured reading in dBuV, the antenna factor (dB), and cable loss (dB) and Subtracting the gain of preamplifier (dB) is auto calculate in spectrum analyzer.

(1) Amplitude (dBuV/m) = FI (dBuV) +AF (dBuV) +CL (dBuV)-Gain (dB)
FI= Reading of the field intensity.
AF= Antenna factor.
CL= Cable loss.
P.S Amplitude is auto calculate in spectrum analyzer.

(2) Actual Amplitude (dBuV/m) = Amplitude (dBuV)-Dis(dB)
The FCC specified emission limits were calculated according the EUT operating frequency and by following linear interpolation equations:
(a) For fundamental frequency : Transmitter Output < +30 dBm
(b) For spurious frequency : Spurious emission limits = fundamental emission limit /10

Data of measurement within this frequency range without mark in the table above means the reading of emissions are attenuated more than 20 dB below the permissible limits or the field strength is too small to be measured.

4.3. Maximum Conducted Output Power Measurement

■ **Limit**

For systems using digital modulation in the 2400-2483.5 MHz, the limit for peak output power is 30 dBm.

■ **Test Setup**

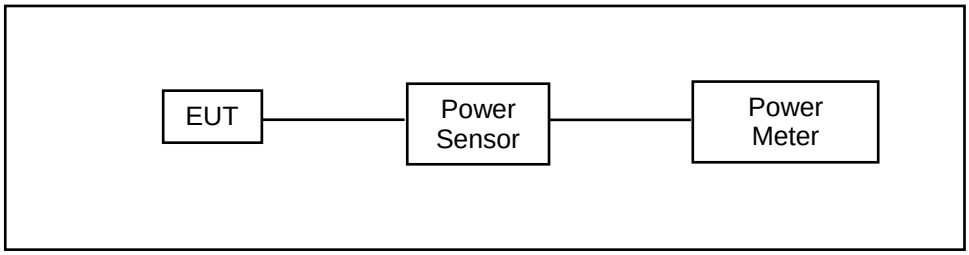

■ **Test Procedure**

The testing follows the Measurement Procedure of ANSI C63.10:2013 section 11.9.2.3.2 Method AVGPM.

The tests below are run with the EUT's transmitter set at high power in TX mode. The EUT is needed to force selection of output power level and channel number. While testing, EUT was set to transmit continuously. Remove the Subjective device's antenna and connect the RF output port to power sensor..

4.4. 6 dB RF Bandwidth Measurement

■ **Limit**

6 dB RF Bandwidth: Systems using digital modulation techniques may operate in the 2400–2483.5 MHz bands. The minimum 6 dB band-width shall be at least 500 kHz.

99 % Occupied Bandwidth: N/A

■ **Test Setup**

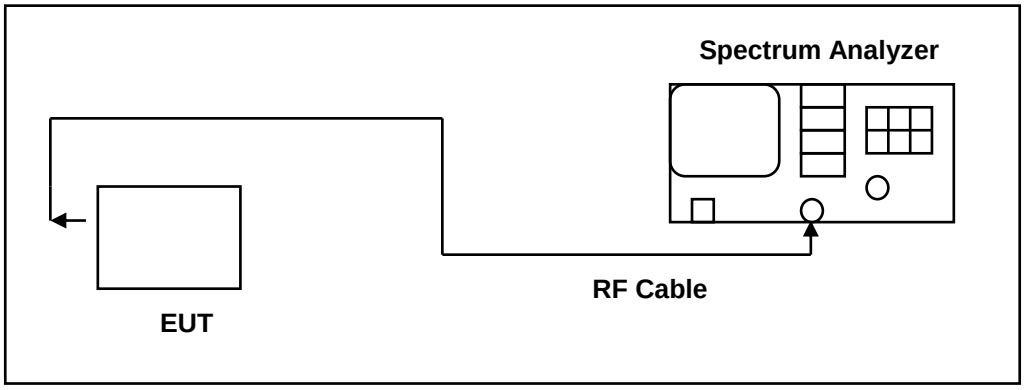

■ **Test Procedure**

The EUT tested to DTS test procedure of ANSI C63.10-2013 section 11.8.2 option2 for compliance to FCC 47CFR 15.247 requirements.

6 dB RF Bandwidth: The antenna port of the EUT was connected to the input of a spectrum analyzer. Analyzer RBW was set to 100 kHz. For each RF output channel investigated, the spectrum analyzer center frequency was set to the channel carrier. A peak output reading was taken, a DISPLAY line was drawn 6 dB lower than peak level. The 6 dB bandwidth was determined from where the channel output spectrum intersected the display line.

The test was performed at 3 channels (Channel low, middle, high)

4.5. Maximum Power Density Measurement

■ **Limit**

For digitally modulated systems, the power spectral density conducted from the intentional radiator to the antenna shall not be greater than 8 dBm in any 3 kHz band during any time interval of continuous transmission.

■ **Test Setup**

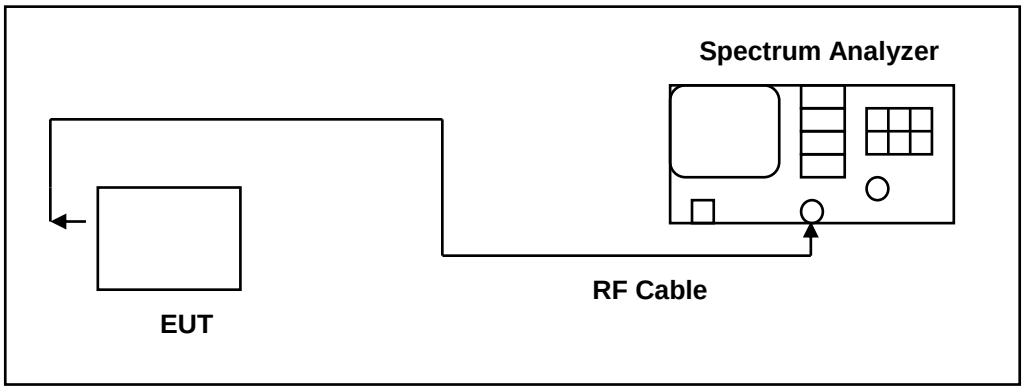

■ **Test Procedure**

The EUT tested to DTS test procedure of ANSI C63.10:2013 section 11.10.2 Method PKPSD.

1. Set analyzer center frequency to DTS channel center frequency.
2. Set the span to 1.5 times the DTS bandwidth.
3. Set the RBW to: 3 kHz ≤ RBW ≤ 100 kHz.
4. Set the VBW ≥ 3 × RBW.
5. Detector = peak.
6. Sweep time = auto couple.
7. Trace mode = max hold.
8. Allow trace to fully stabilize.
9. Use the peak marker function to determine the maximum amplitude level within the RBW.
10. If measured value exceeds limit, reduce RBW (no less than 3 kHz) and repeat.

4.6. Out of Band Conducted Emissions Measurement

■ **Limit**

In any 100 kHz bandwidth outside the frequency band in which the spread spectrum or digitally modulated intentional radiator is operating, the radio frequency power that is produced by the intentional radiator shall be at least 20 dB below that in the 100 kHz bandwidth within the band that contains the highest level of the desired power

■ **Test Setup**

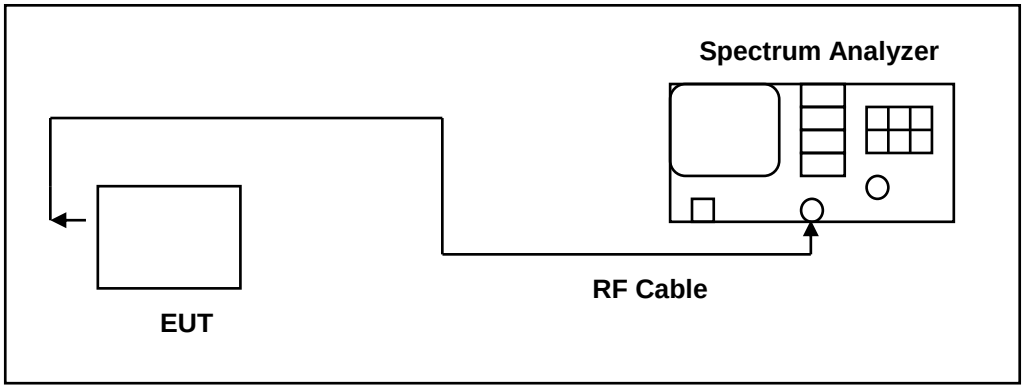

■ **Test Procedure**

In any 100 kHz bandwidth outside the EUT pass band, the RF power produced by the modulation products of the spreading sequence, the information sequence, and the carrier frequency shall be at least 20 dB below that of the maximum in-band 100 kHz emission, antenna output of the EUT was coupled directly to spectrum analyzer; if an external attenuator and/or cable was used, these losses are compensated for with the analyzer OFFSET function.

All other types of emissions from the EUT shall meet the general limits for radiated frequencies outside the pass band.

The test was performed at 3 channels.

4.7. Antenna Measurement

■ **Limit**

For intentional device, according to 15.203, an intentional radiator shall be designed to ensure that no antenna other than that furnished by the responsible party shall be used with the device.

And According to 15.247 (b), if transmitting antennas of directional gain greater than 6 dBi are used, the power shall be reduced by the amount in dB that the directional gain of the antenna exceeds 6 dBi.

■ **Antenna Connector Construction**

See section 2 – antenna information.

5 Test Results

5.1. Conducted Emission

Standard:	FCC Part 15.247	Line:	L1
Test item:	Conducted Emission	Power:	AC 120 V/60 Hz
Mode:	Transmit Mode	Temp.(℃)/Hum.(%RH):	26(℃)/60 %RH
Description:			

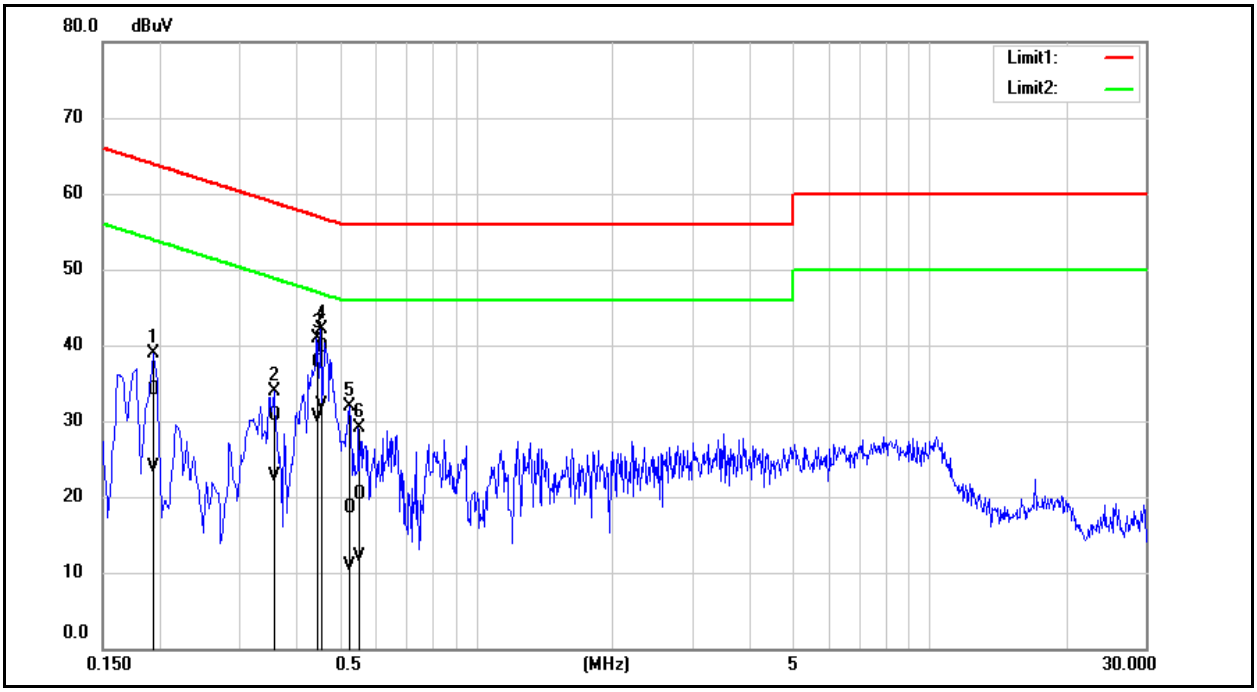

No.	Frequency (MHz)	QP reading (dBuV)	AVG reading (dBuV)	Correction factor (dB)	QP result (dBuV)	AVG result (dBuV)	QP limit (dBuV)	AVG limit (dBuV)	QP margin (dB)	AVG margin (dB)	Remark
1	0.1940	24.64	14.44	9.54	34.18	23.98	63.86	53.86	-29.68	-29.88	Pass
2	0.3580	21.17	13.06	9.55	30.72	22.61	58.77	48.77	-28.05	-26.16	Pass
3	0.4460	28.20	20.87	9.55	37.75	30.42	56.95	46.95	-19.20	-16.53	Pass
4	0.4540	30.12	22.60	9.55	39.67	32.15	56.80	46.80	-17.13	-14.65	Pass
5	0.5260	8.94	1.39	9.55	18.49	10.94	56.00	46.00	-37.51	-35.06	Pass
6	0.5500	10.79	2.47	9.55	20.34	12.02	56.00	46.00	-35.66	-33.98	Pass

Note: 1. Result (dBuV) = Correction factor (dB) + Reading(dBuV).
2. Correction factor (dB) = Cable loss (dB) + L.I.S.N. factor (dB).

Standard:	FCC Part 15.247	Line:	N
Test item:	Conducted Emission	Power:	AC 120 V/60 Hz
Mode:	Transmit Mode	Temp.(℃)/Hum.(%RH):	26(℃)/60 %RH
Description:			

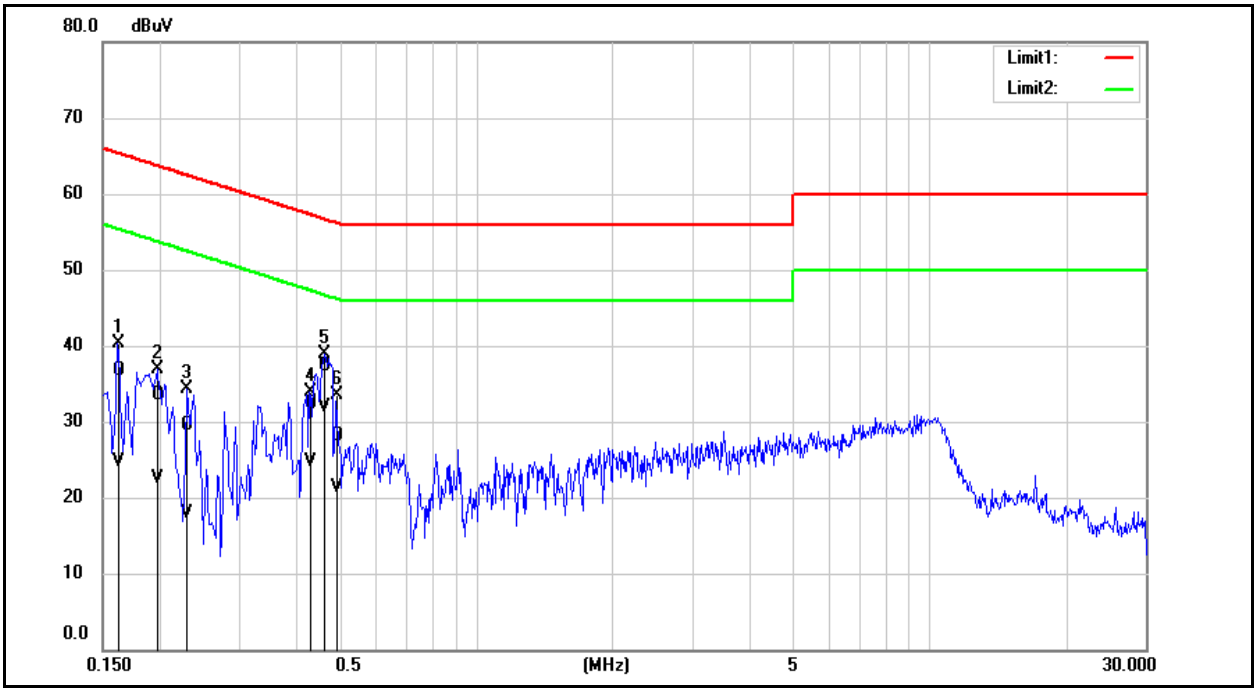

No.	Frequency (MHz)	QP reading (dBuV)	AVG reading (dBuV)	Correction factor (dB)	QP result (dBuV)	AVG result (dBuV)	QP limit (dBuV)	AVG limit (dBuV)	QP margin (dB)	AVG margin (dB)	Remark
1	0.1620	27.20	15.03	9.60	36.80	24.63	65.36	55.36	-28.56	-30.73	Pass
2	0.1980	23.91	12.96	9.60	33.51	22.56	63.69	53.69	-30.18	-31.13	Pass
3	0.2300	19.91	8.33	9.60	29.51	17.93	62.45	52.45	-32.94	-34.52	Pass
4	0.4300	22.74	15.19	9.61	32.35	24.80	57.25	47.25	-24.90	-22.45	Pass
5	0.4620	27.78	22.37	9.61	37.39	31.98	56.66	46.66	-19.27	-14.68	Pass
6	0.4900	18.41	11.62	9.61	28.02	21.23	56.17	46.17	-28.15	-24.94	Pass

Note: 1. Result (dBuV) = Correction factor (dB) + Reading(dBuV).

2. Correction factor (dB) = Cable loss (dB) + L.I.S.N. factor (dB).

5.2. Conducted Test Results

Reference Appendix A

Reference Appendix B

5.3. Radiated Emission Measurement

Below 1 GHz

Standard:	FCC Part 15.247	Test Distance:	3 m
Mode:	Transmit Mode		
Ant.Polar.:	Horizontal		

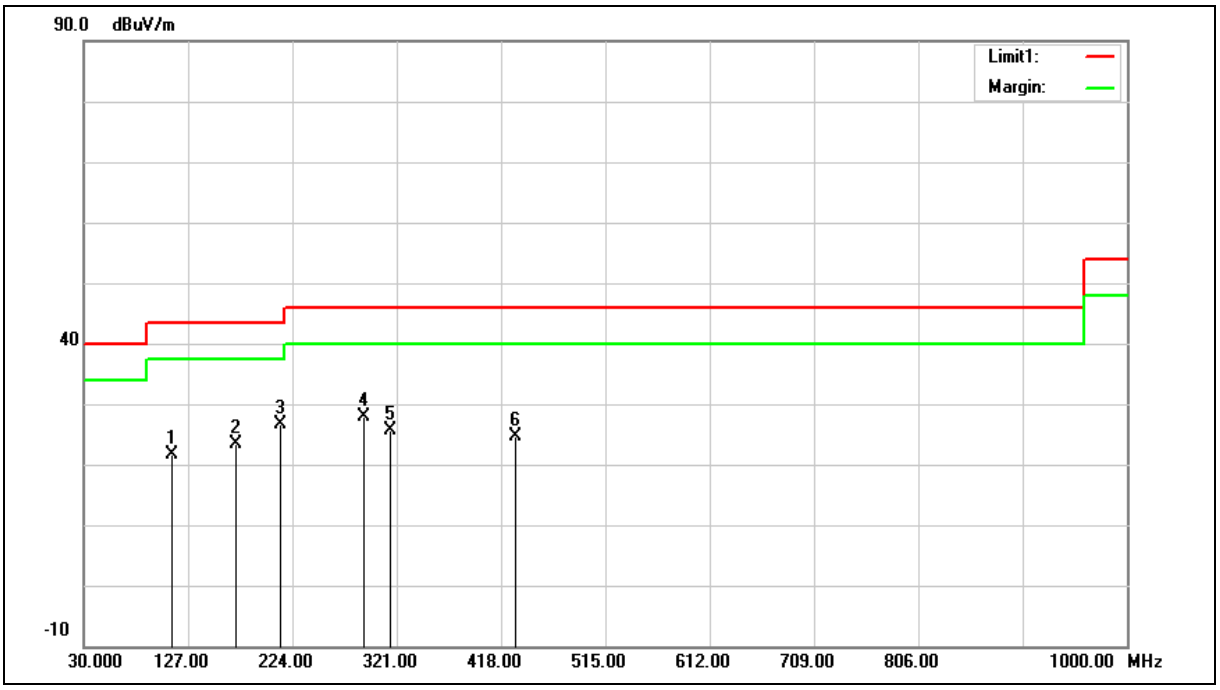

No.	Frequency (MHz)	Reading (dBuV)	Correct Factor (dB/m)	Result (dBuV/m)	Limit (dBuV/m)	Margin (dB)	Remark
1	111.4800	32.11	-10.55	21.56	43.50	-21.94	QP
2	171.6200	30.47	-7.04	23.43	43.50	-20.07	QP
3*	212.3600	36.04	-9.32	26.72	43.50	-16.78	QP
4	290.9300	34.19	-6.25	27.94	46.00	-18.06	QP
5	315.1800	31.53	-5.87	25.66	46.00	-20.34	QP
6	431.5800	27.52	-2.98	24.54	46.00	-21.46	QP

Note:1.Result (dBuV/m) = Correct Factor (dB/m) + Reading(dBuV).

2.Correction factor (dB/m) = Antenna Factor (dB/m) + Cable loss (dB) – Pre-Amplifier gain (dB).

3.When the peak results are less than average limit, so not need to evaluate the average.

Standard:	FCC Part 15.247	Test Distance:	3 m
Mode:	Transmit Mode		
Ant.Polar.:	Vertical		

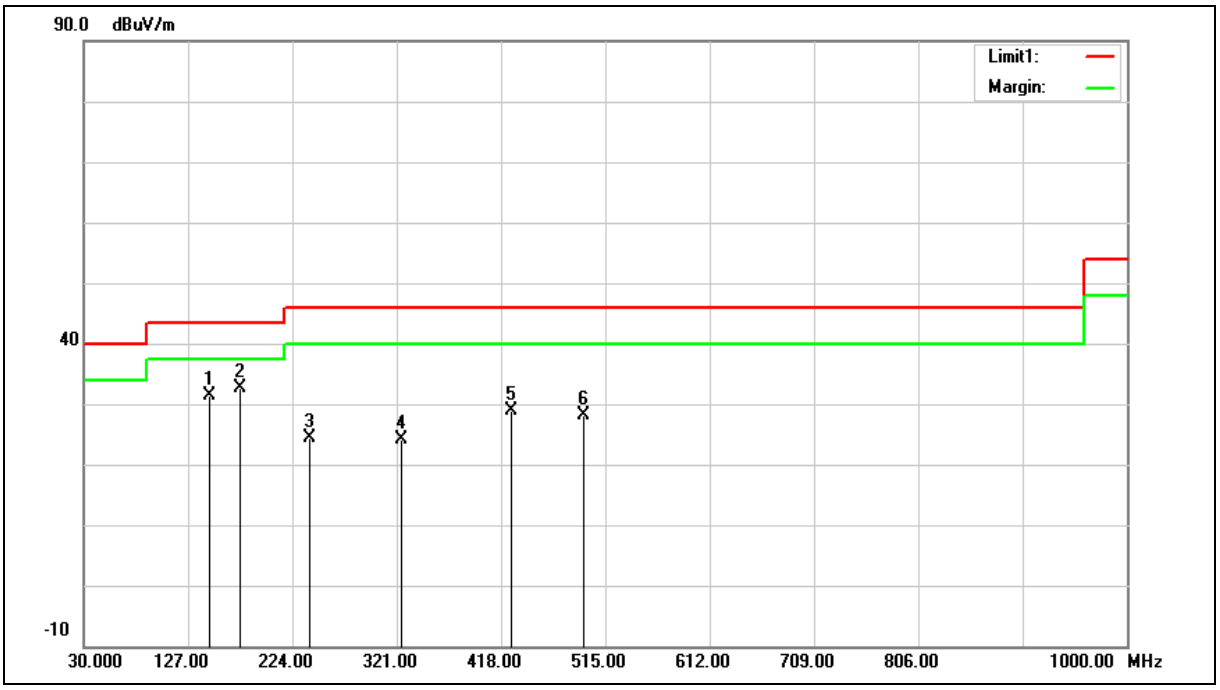

No.	Frequency (MHz)	Reading (dBuV)	Correct Factor (dB/m)	Result (dBuV/m)	Limit (dBuV/m)	Margin (dB)	Remark
1	147.3700	38.48	-7.10	31.38	43.50	-12.12	QP
2*	175.5000	39.92	-7.36	32.56	43.50	-10.94	QP
3	239.5200	32.16	-7.77	24.39	46.00	-21.61	QP
4	325.8500	29.66	-5.60	24.06	46.00	-21.94	QP
5	427.7000	31.87	-3.07	28.80	46.00	-17.20	QP
6	494.6300	29.99	-1.89	28.10	46.00	-17.90	QP

Note:1.Result (dBuV/m) = Correct Factor (dB/m) + Reading(dBuV).

2.Correction factor (dB/m) = Antenna Factor (dB/m) + Cable loss (dB) – Pre-Amplifier gain (dB).

3.When the peak results are less than average limit, so not need to evaluate the average.

Harmonic

Above 1 GHz

Standard:	FCC Part 15.247	Test Site:	966 Chamber
Polarization:	Horizontal		
Test Mode:	BLE 1M 2402 MHz		
Remark:			

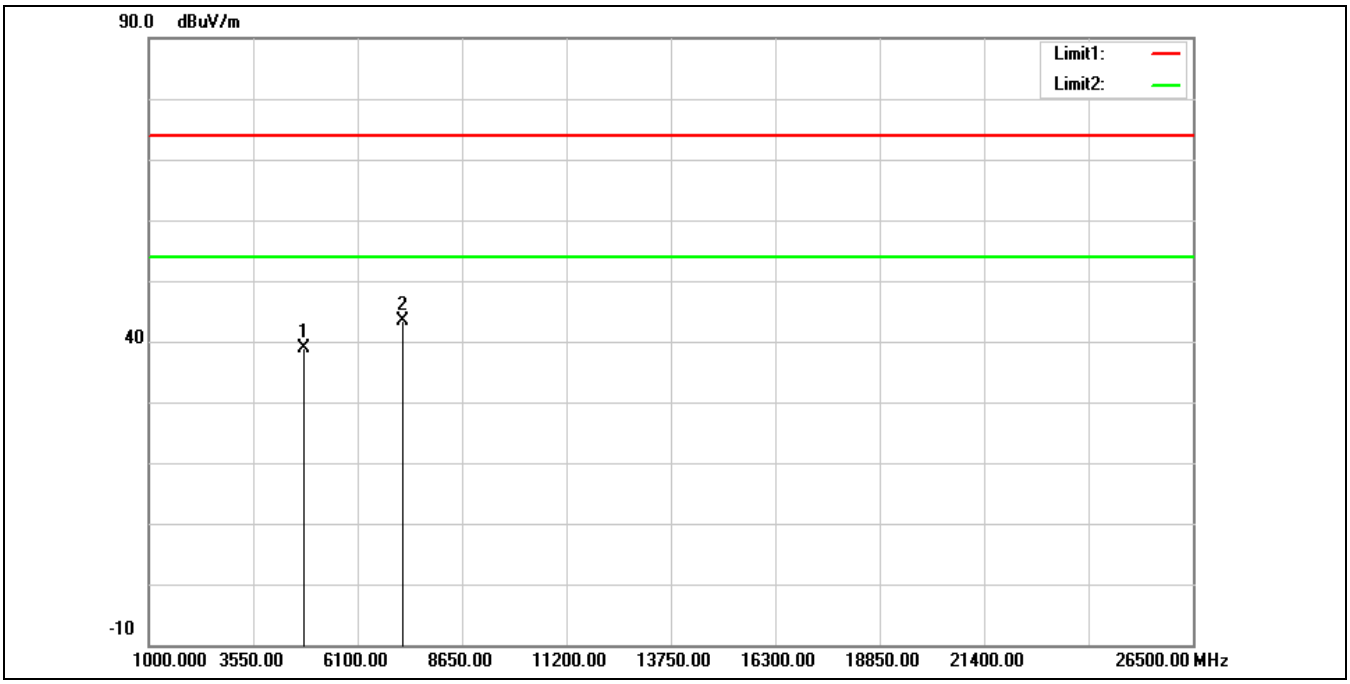

No.	Frequency (MHz)	Reading (dBuV)	Correction (dB/m)	Result (dBuV/m)	Limit (dBuV/m)	Margin (dB)	Remark
1	4804.000	38.58	0.29	38.87	74.00	-35.13	peak
2*	7206.000	35.52	7.82	43.34	74.00	-30.66	peak

Standard:	FCC Part 15.247	Test Site:	966 Chamber
Polarization:	Vertical		
Test Mode:	BLE 1M 2402 MHz		
Remark:			

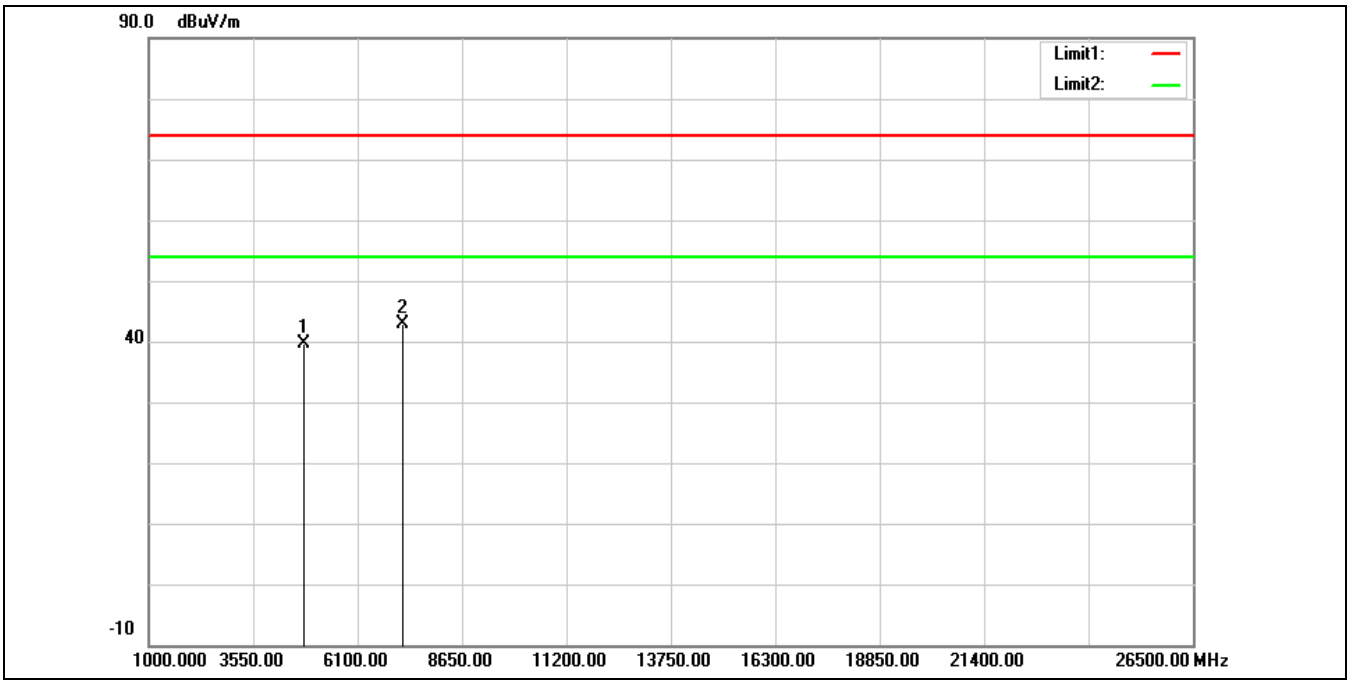

No.	Frequency (MHz)	Reading (dBuV)	Correction (dB/m)	Result (dBuV/m)	Limit (dBuV/m)	Margin (dB)	Remark
1	4804.000	39.39	0.29	39.68	74.00	-34.32	peak
2*	7206.000	35.02	7.82	42.84	74.00	-31.16	peak

Standard:	FCC Part 15.247	Test Site:	966 Chamber
Polarization:	Horizontal		
Test Mode:	BLE 1M 2440 MHz		
Remark:			

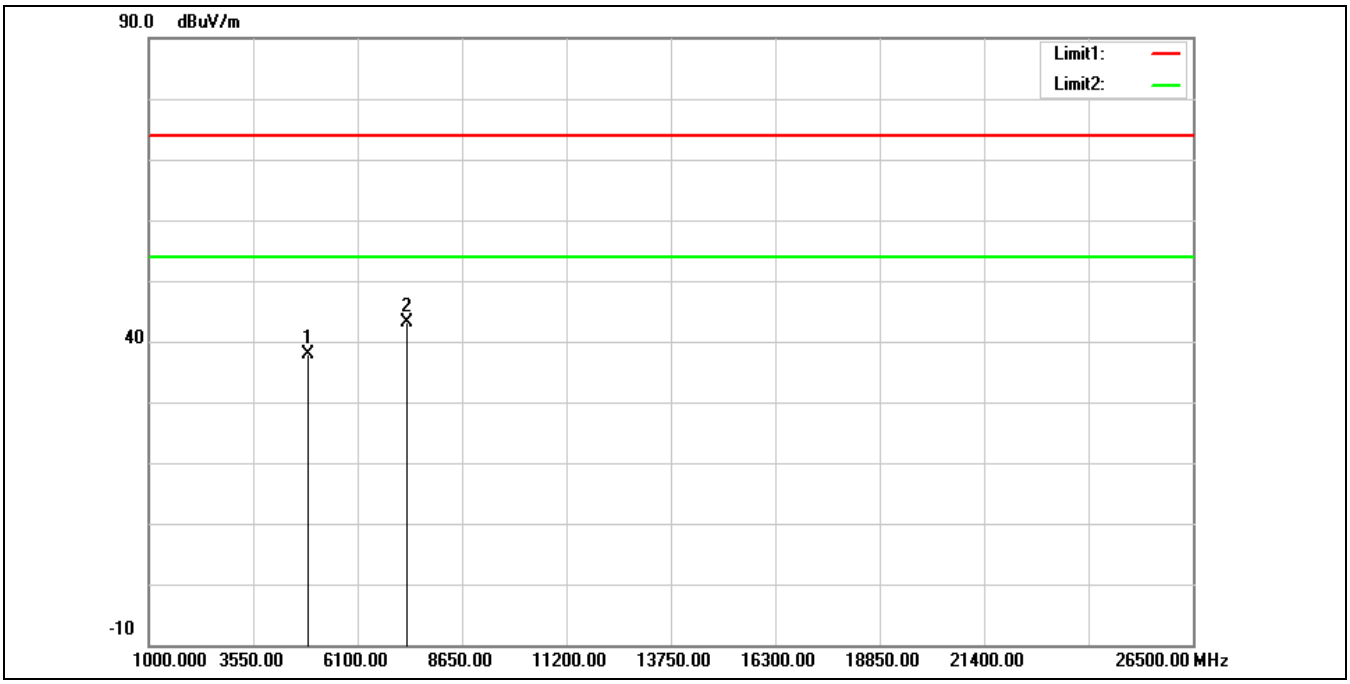

No.	Frequency (MHz)	Reading (dBuV)	Correction (dB/m)	Result (dBuV/m)	Limit (dBuV/m)	Margin (dB)	Remark
1	4880.000	37.62	0.38	38.00	74.00	-36.00	peak
2*	7320.000	35.22	7.99	43.21	74.00	-30.79	peak

Standard:	FCC Part 15.247	Test Site:	966 Chamber
Polarization:	Vertical		
Test Mode:	BLE 1M 2440 MHz		
Remark:			

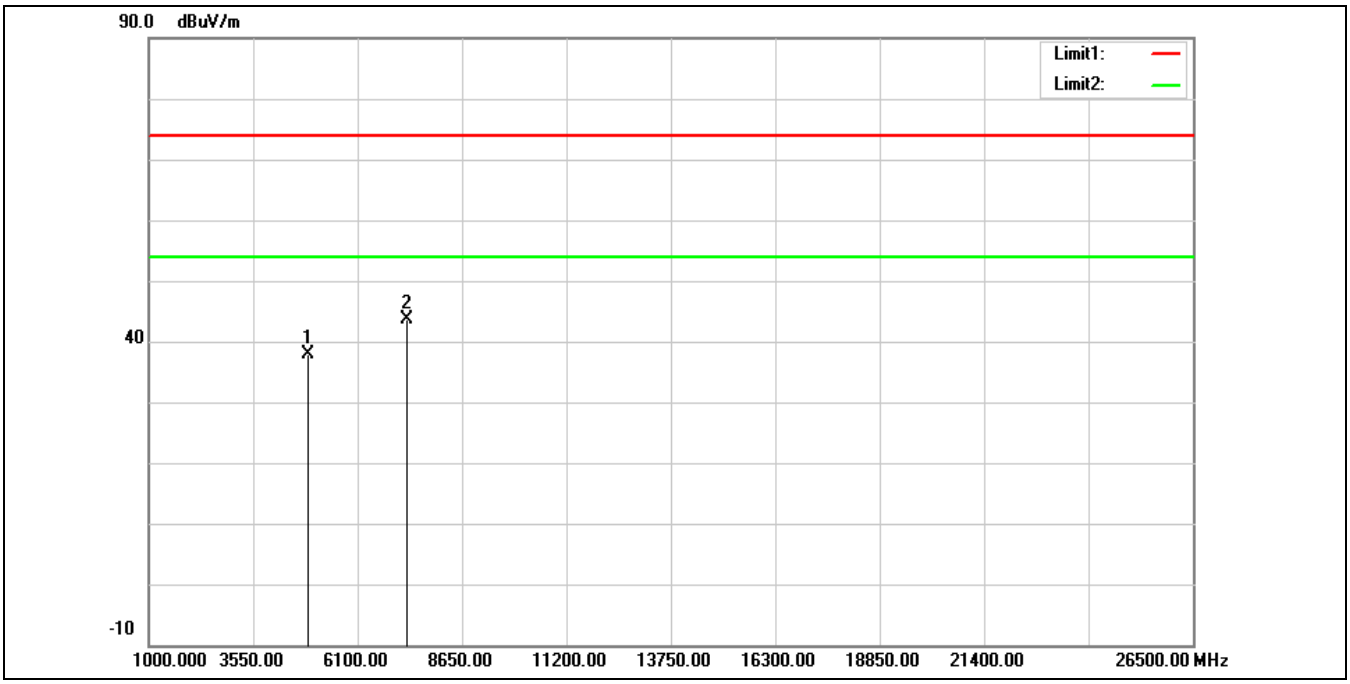

No.	Frequency (MHz)	Reading (dBuV)	Correction (dB/m)	Result (dBuV/m)	Limit (dBuV/m)	Margin (dB)	Remark
1	4880.000	37.49	0.38	37.87	74.00	-36.13	peak
2*	7320.000	35.73	7.99	43.72	74.00	-30.28	peak

Standard:	FCC Part 15.247	Test Site:	966 Chamber
Polarization:	Horizontal		
Test Mode:	BLE 1M 2480 MHz		
Remark:			

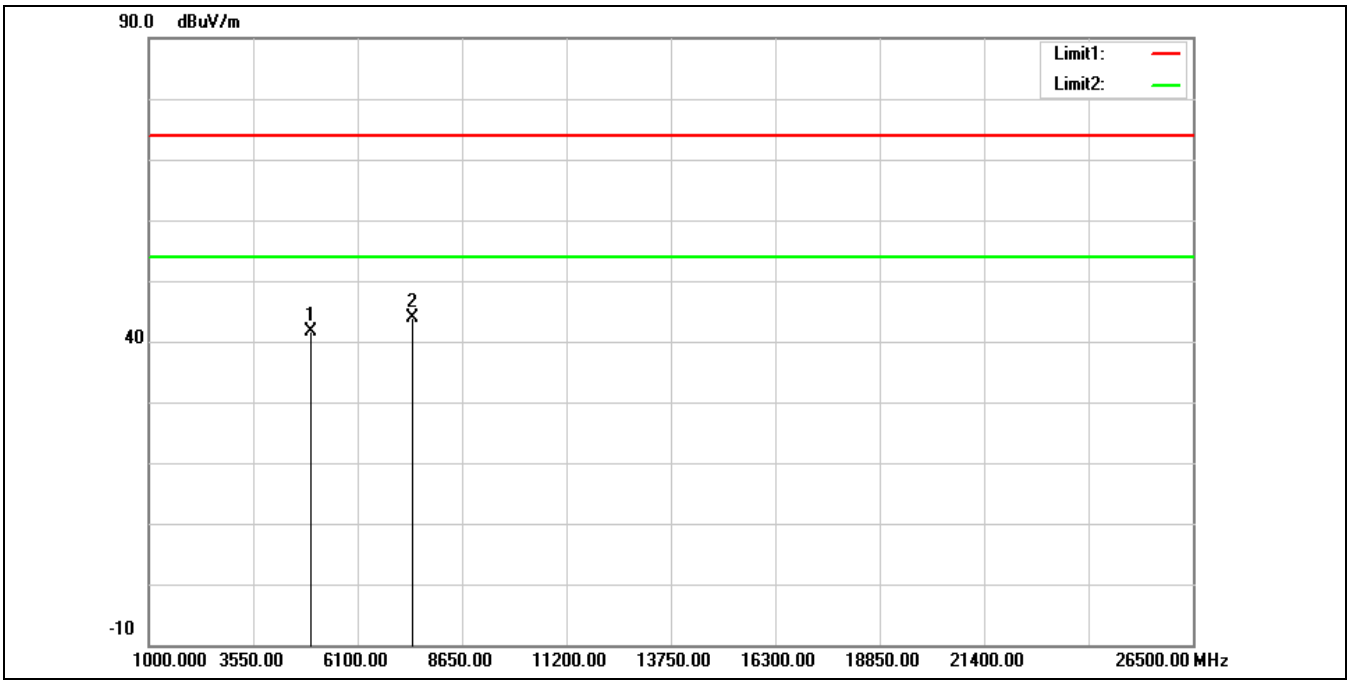

No.	Frequency (MHz)	Reading (dBuV)	Correction (dB/m)	Result (dBuV/m)	Limit (dBuV/m)	Margin (dB)	Remark
1	4960.000	41.03	0.57	41.60	74.00	-32.40	peak
2*	7440.000	35.51	8.34	43.85	74.00	-30.15	peak

Standard:	FCC Part 15.247	Test Site:	966 Chamber
Polarization:	Vertical		
Test Mode:	BLE 1M 2480 MHz		
Remark:			

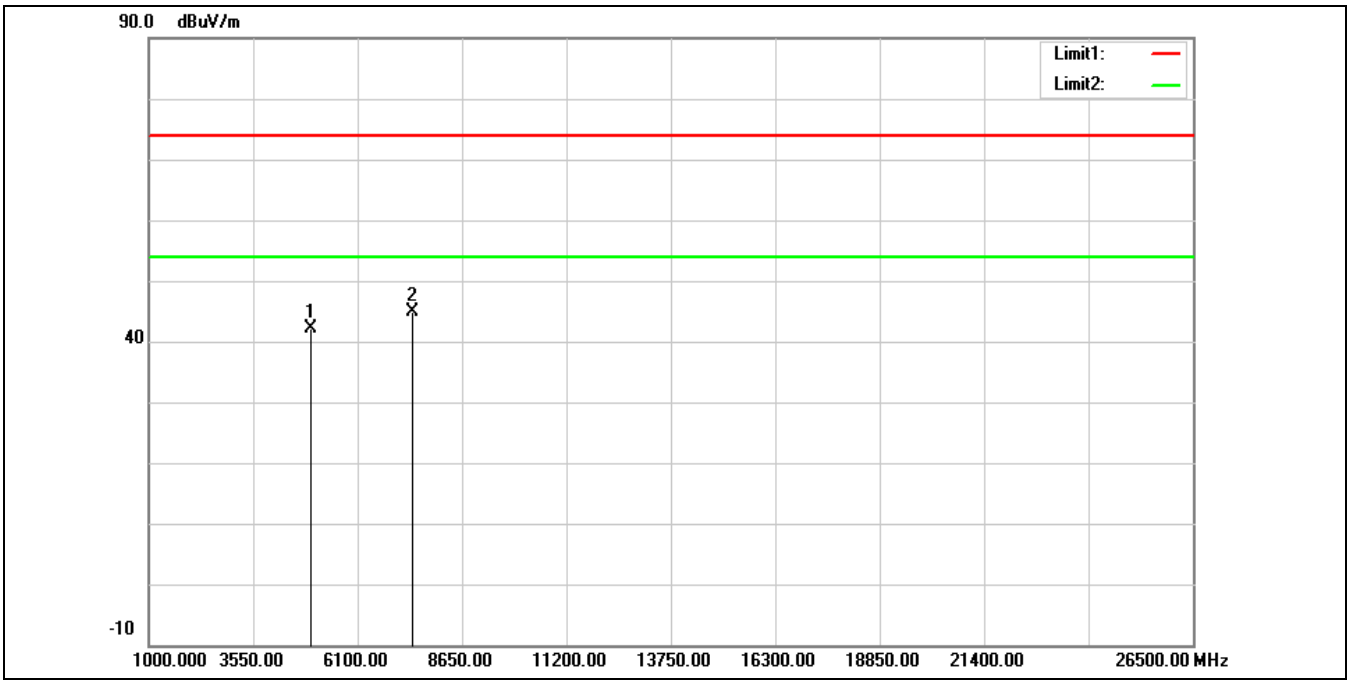

No.	Frequency (MHz)	Reading (dBuV)	Correction (dB/m)	Result (dBuV/m)	Limit (dBuV/m)	Margin (dB)	Remark
1	4960.000	41.65	0.57	42.22	74.00	-31.78	peak
2*	7440.000	36.66	8.34	45.00	74.00	-29.00	peak

Standard:	FCC Part 15.247	Test Site:	966 Chamber
Polarization:	Horizontal		
Test Mode:	Receiver Mode		
Remark:			

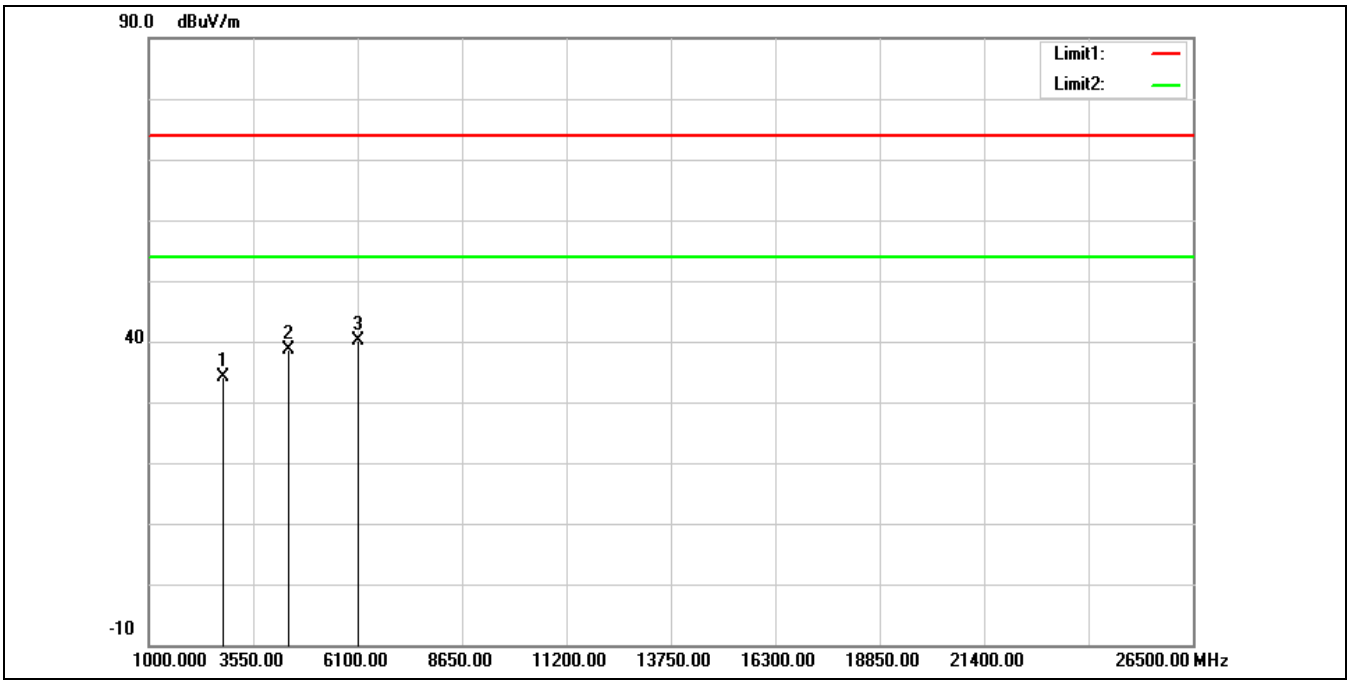

No.	Frequency (MHz)	Reading (dBuV)	Correction (dB/m)	Result (dBuV/m)	Limit (dBuV/m)	Margin (dB)	Remark
1	2802.000	39.29	-5.27	34.02	74.00	-39.98	peak
2	4417.000	39.86	-1.19	38.67	74.00	-35.33	peak
3*	6083.000	36.79	3.39	40.18	74.00	-33.82	peak

Standard:	FCC Part 15.247	Test Site:	966 Chamber
Polarization:	Vertical		
Test Mode:	Receiver Mode		
Remark:			

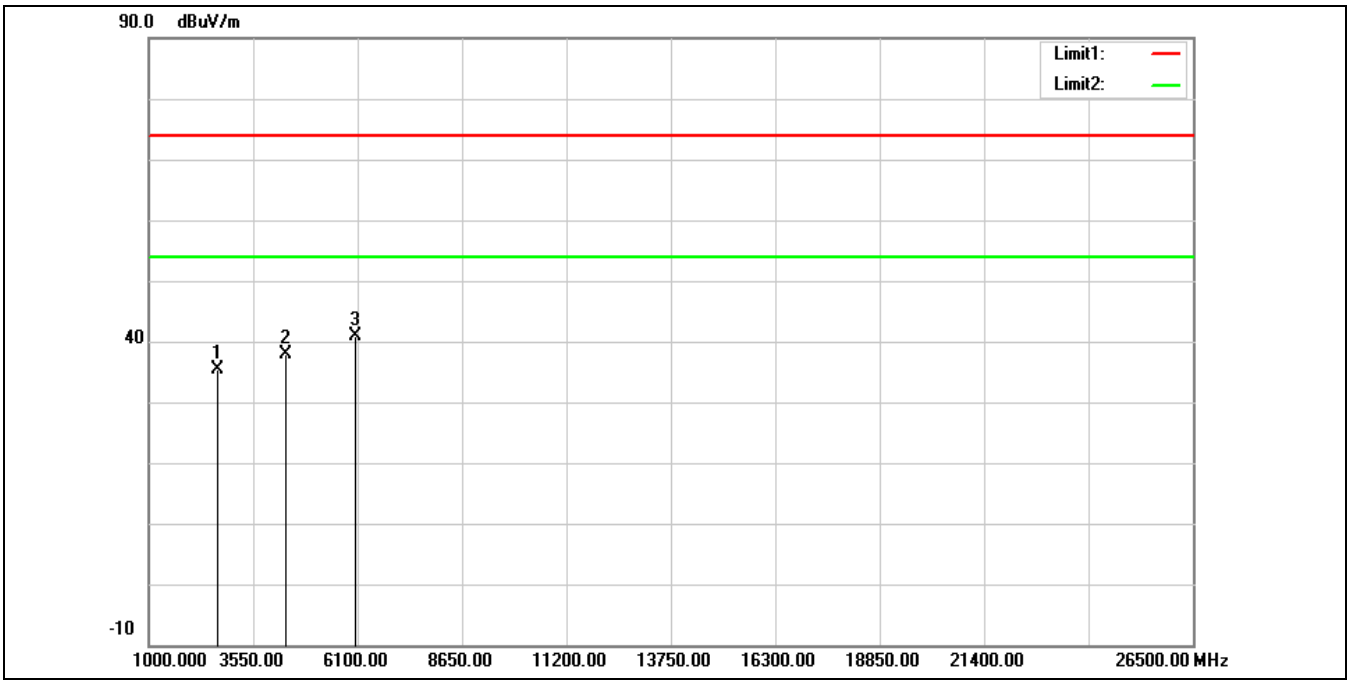

No.	Frequency (MHz)	Reading (dBuV)	Correction (dB/m)	Result (dBuV/m)	Limit (dBuV/m)	Margin (dB)	Remark
1	2683.000	41.18	-5.90	35.28	74.00	-38.72	peak
2	4332.000	39.28	-1.40	37.88	74.00	-36.12	peak
3*	6049.000	37.59	3.24	40.83	74.00	-33.17	peak

Band Edge

Standard:	FCC Part 15.247	Test Site:	966 Chamber
Polarization:	Horizontal		
Test Mode:	BLE 1M 2402 MHz		
Remark:			

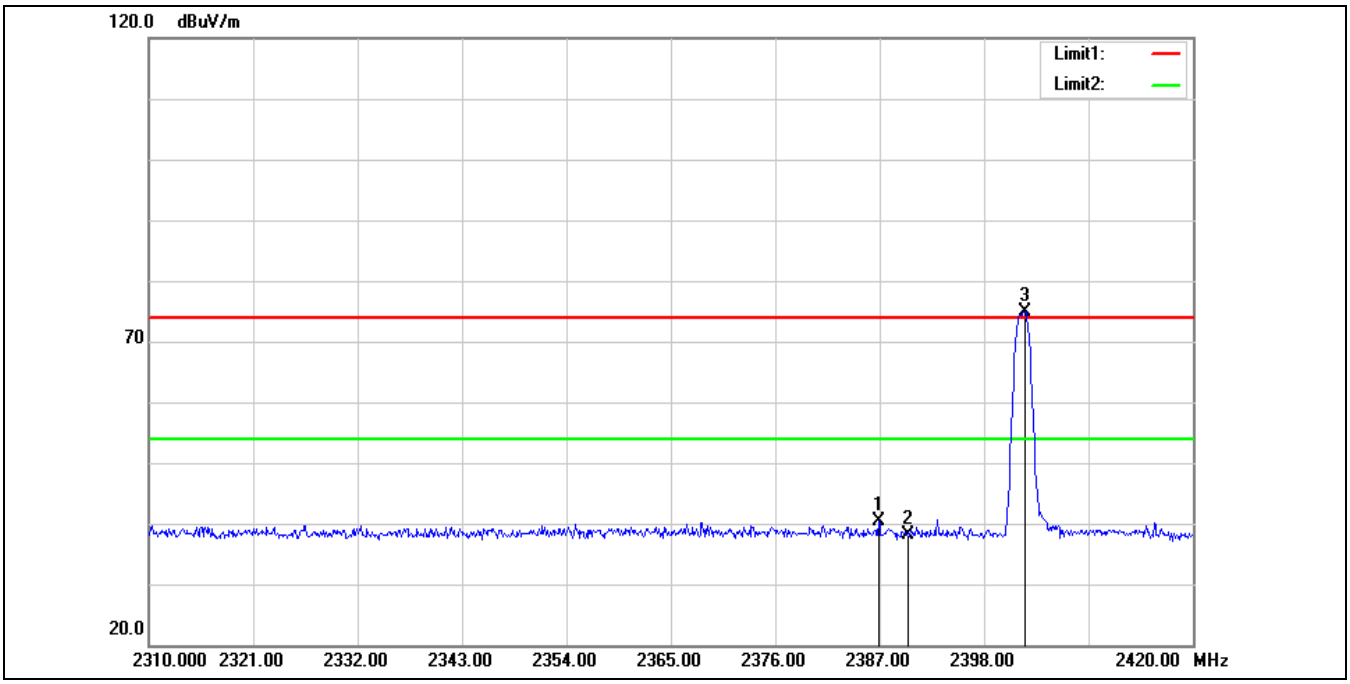

No.	Frequency (MHz)	Reading (dBuV)	Correction (dB/m)	Result (dBuV/m)	Limit (dBuV/m)	Margin (dB)	Remark
1	2386.890	46.48	-6.17	40.31	74.00	-33.69	peak
2	2390.000	44.38	-6.19	38.19	74.00	-35.81	peak
3*	2402.290	81.14	-6.25	74.89	74.00	0.89	peak

Standard:	FCC Part 15.247	Test Site:	966 Chamber
Polarization:	Vertical		
Test Mode:	BLE 1M 2402 MHz		
Remark:			

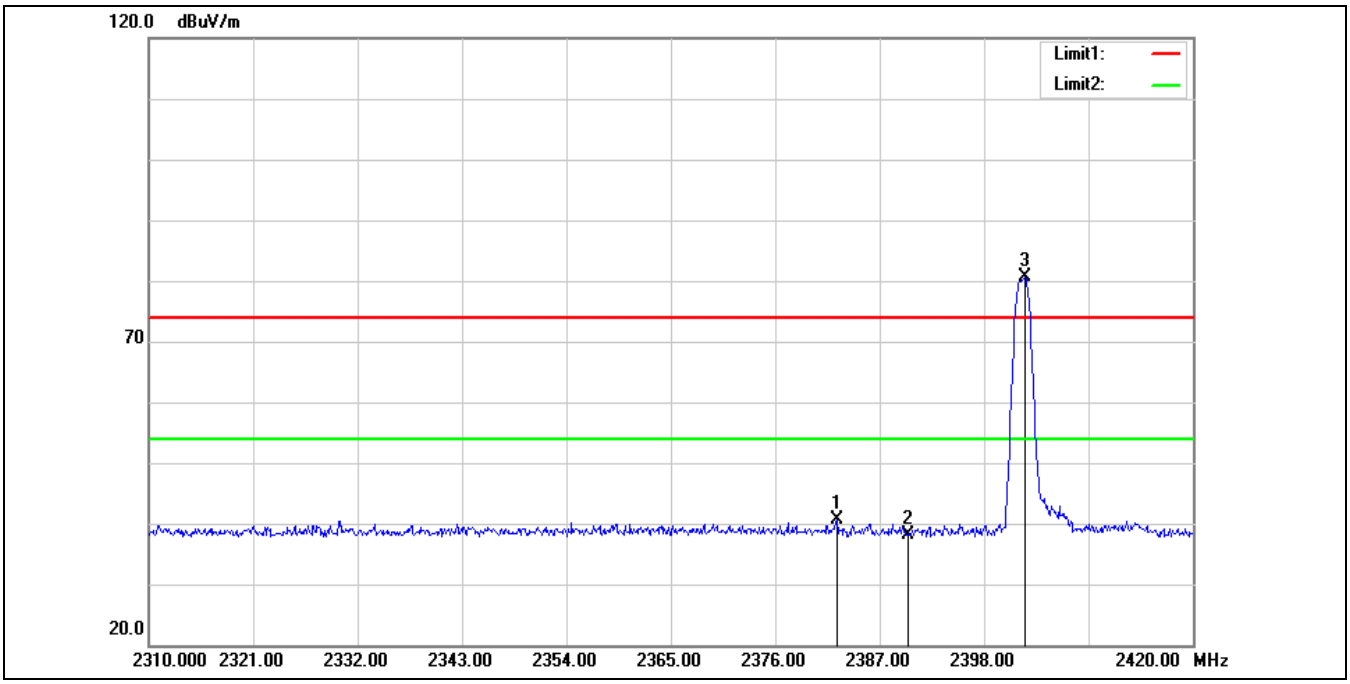

No.	Frequency (MHz)	Reading (dBuV)	Correction (dB/m)	Result (dBuV/m)	Limit (dBuV/m)	Margin (dB)	Remark
1	2382.490	46.68	-6.15	40.53	74.00	-33.47	peak
2	2390.000	44.40	-6.19	38.21	74.00	-35.79	peak
3*	2402.290	86.79	-6.25	80.54	74.00	6.54	peak

Standard:	FCC Part 15.247	Test Site:	966 Chamber
Polarization:	Horizontal		
Test Mode:	BLE 1M 2480 MHz		
Remark:			

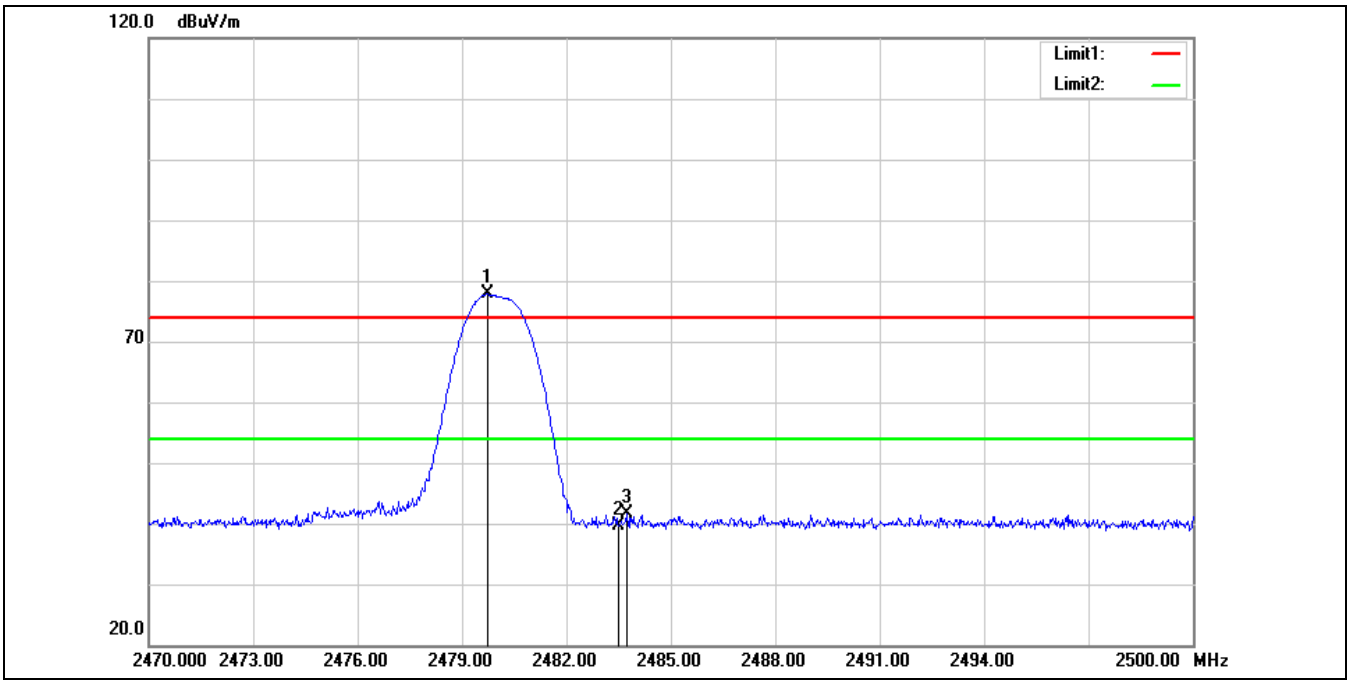

No.	Frequency (MHz)	Reading (dBuV)	Correction (dB/m)	Result (dBuV/m)	Limit (dBuV/m)	Margin (dB)	Remark
1*	2479.720	84.27	-6.46	77.81	74.00	3.81	peak
2	2483.500	46.02	-6.46	39.56	74.00	-34.44	peak
3	2483.740	48.14	-6.46	41.68	74.00	-32.32	peak

Standard:	FCC Part 15.247	Test Site:	966 Chamber
Polarization:	Vertical		
Test Mode:	BLE 1M 2480 MHz		
Remark:			

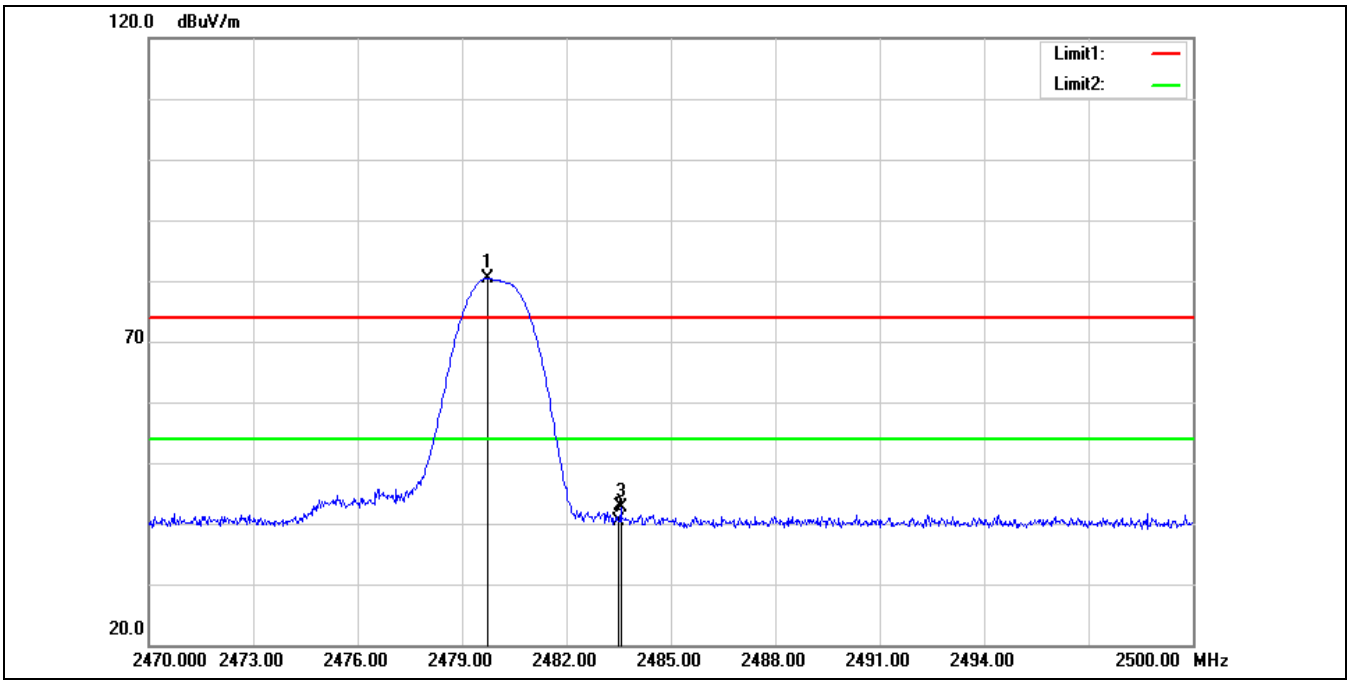

No.	Frequency (MHz)	Reading (dBuV)	Correction (dB/m)	Result (dBuV/m)	Limit (dBuV/m)	Margin (dB)	Remark
1*	2479.750	86.91	-6.46	80.45	74.00	6.45	peak
2	2483.500	46.75	-6.46	40.29	74.00	-33.71	peak
3	2483.560	49.17	-6.46	42.71	74.00	-31.29	peak

---END---