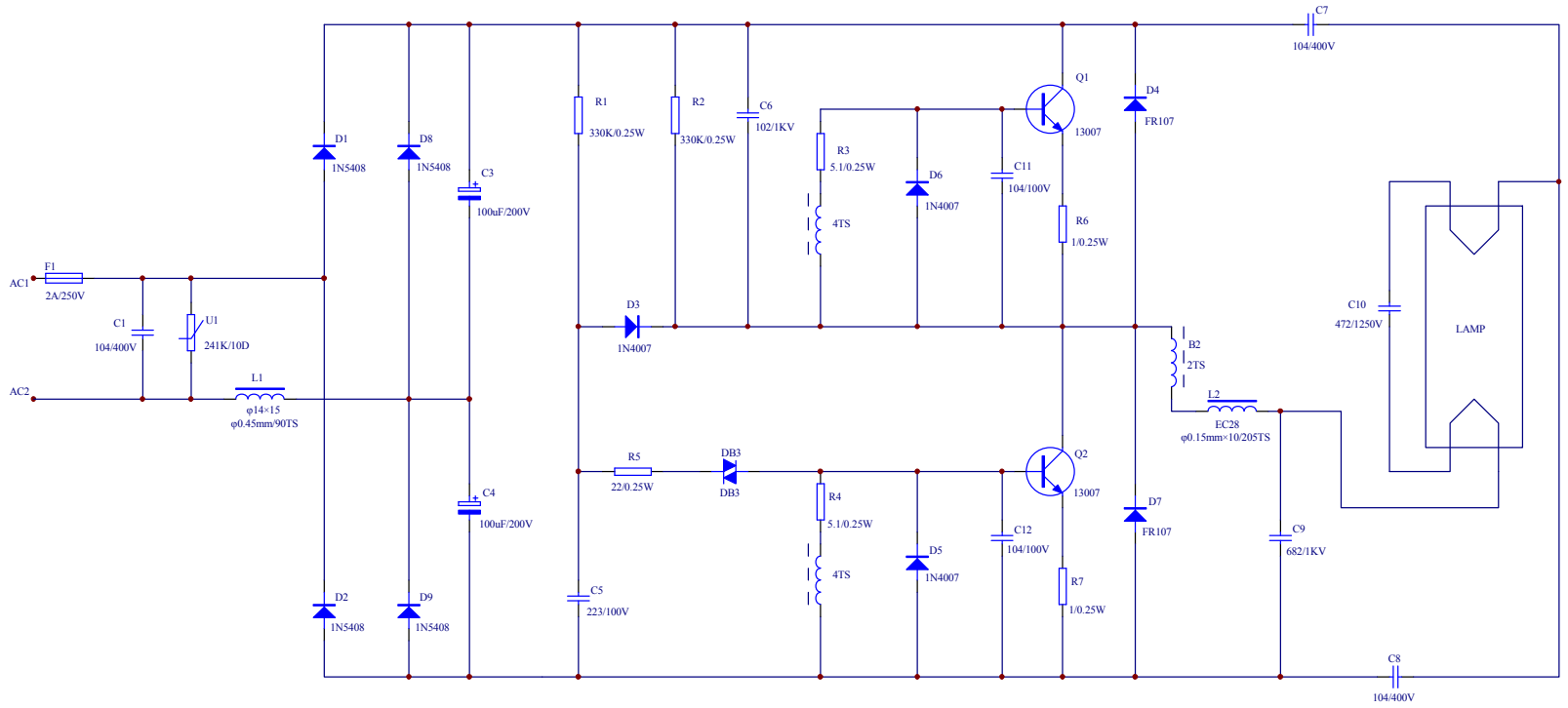
AC1
AC2
F1
2A/250V
C1
104/400V
U1
241K/10D
L1
φ14×15
φ0.45mm/90TS
D1
1N5408
D2
1N5408
D8
1N5408
D9
1N5408
C3
100uF/200V
C4
100uF/200V
R1
330K/0.25W
R2
330K/0.25W
C6
102/1KV
D3
1N4007
R5
22/0.25W
DB3
DB3
C5
223/100V
R3
5.1/0.25W
4TS
D6
1N4007
R4
5.1/0.25W
4TS
D5
1N4007
Q1
13007
Q2
13007
C11
104/100V
C12
104/100V
R6
1/0.25W
R7
1/0.25W
D4
FR107
D7
FR107
B2
2TS
L2
EC28
φ0.15mm×10/205TS
C7
104/400V
C10
472/1250V
LAMP
C9
682/1KV
C8
104/400V

SUS-55W

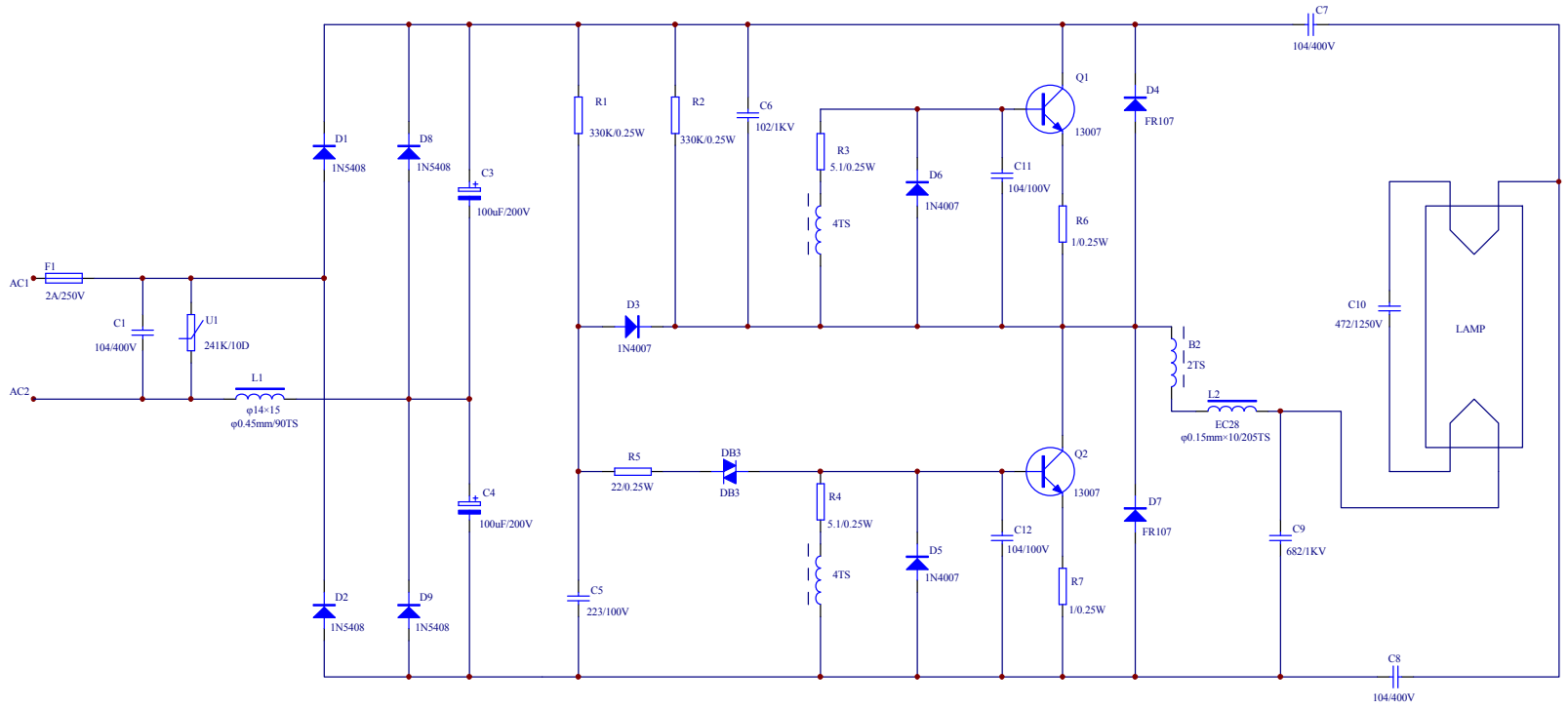
AC1
AC2
F1
2A/250V
C1
104/400V
U1
241K/10D
L1
φ14×15
φ0.45mm/90TS
D1
1N5408
D2
1N5408
D8
1N5408
D9
1N5408
C3
100uF/200V
C4
100uF/200V
R1
330K/0.25W
R2
330K/0.25W
C6
102/1KV
D3
1N4007
R5
22/0.25W
DB3
DB3
C5
223/100V
R3
5.1/0.25W
4TS
D6
1N4007
R4
5.1/0.25W
4TS
D5
1N4007
Q1
13007
Q2
13007
C11
104/100V
C12
104/100V
R6
1/0.25W
R7
1/0.25W
D4
FR107
D7
FR107
B2
2TS
L2
EC28
φ0.15mm×10/205TS
C7
104/400V
C10
472/1250V
LAMP
C9
682/1KV
C8
104/400V

SUS-105W

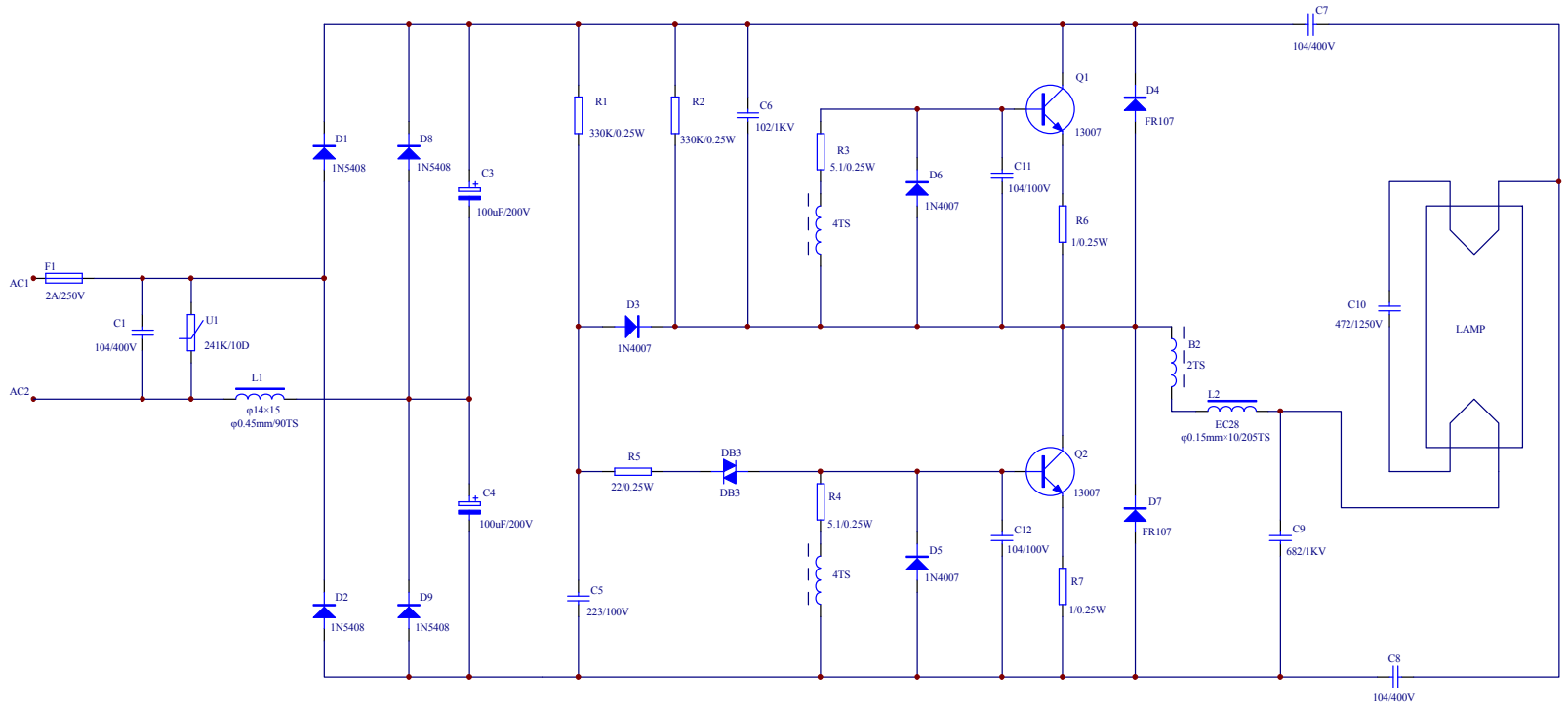
AC1
AC2
F1
2A/250V
C1
104/400V
U1
241K/10D
L1
φ14×15
φ0.45mm/90TS
D1
1N5408
D2
1N5408
D8
1N5408
D9
1N5408
C3
100uF/200V
C4
100uF/200V
R1
330K/0.25W
R2
330K/0.25W
C6
102/1KV
D3
1N4007
R5
22/0.25W
DB3
DB3
C5
223/100V
R3
5.1/0.25W
4TS
D6
1N4007
R4
5.1/0.25W
4TS
D5
1N4007
Q1
13007
Q2
13007
C11
104/100V
C12
104/100V
R6
1/0.25W
R7
1/0.25W
D4
FR107
D7
FR107
B2
2TS
L2
EC28
φ0.15mm×10/205TS
C7
104/400V
C10
472/1250V
LAMP
C9
682/1KV
C8
104/400V

SUS-65W

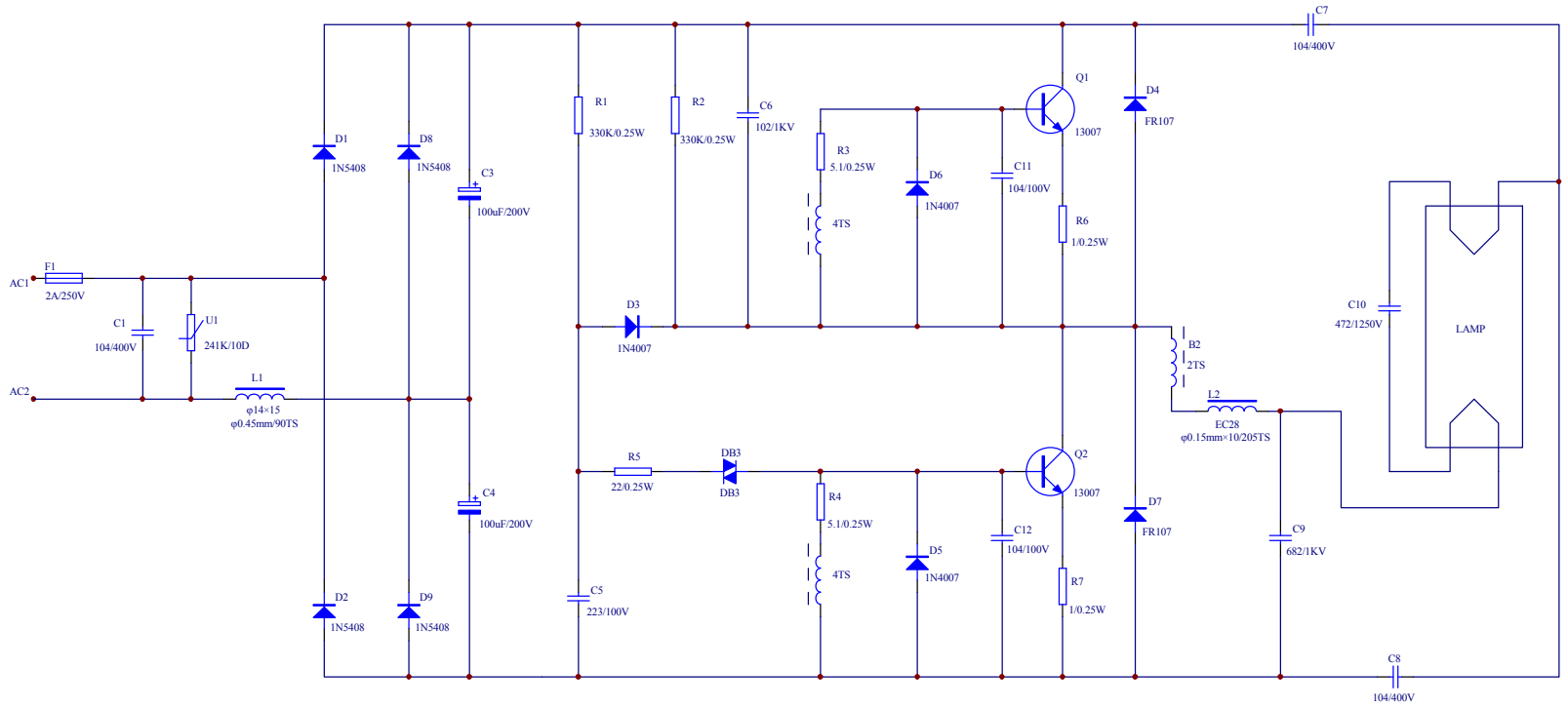
AC1
AC2
F1
2A/250V
C1
104/400V
U1
241K/10D
L1
φ14×15
φ0.45mm/90TS
D1
1N5408
D2
1N5408
D8
1N5408
D9
1N5408
C3
100uF/200V
C4
100uF/200V
R1
330K/0.25W
R2
330K/0.25W
C6
102/1KV
D3
1N4007
R5
22/0.25W
DB3
DB3
C5
223/100V
R3
5.1/0.25W
4TS
D6
1N4007
R4
5.1/0.25W
4TS
D5
1N4007
Q1
13007
Q2
13007
C11
104/100V
C12
104/100V
R6
1/0.25W
R7
1/0.25W
D4
FR107
D7
FR107
B2
2TS
L2
EC28
φ0.15mm×10/205TS
C7
104/400V
C10
472/1250V
LAMP
C9
682/1KV
C8
104/400V

SUS-85W