soma
NETWORKS

SOMAport 140 Setup Guide

Document ID: OPN-USER.0003
Date: August 30, 2001

Author Information

Author	E-mail	Phone #
Irene Suchocki	isuchocki@somanetworks.com	514-484-1016

Revision History

Status	Version	Date	Changes Made
Draft	0.01	March 8, 2001	Document created
Draft	0.02	March 23, 2001	Comments from subject matter expert review incorporated
Initial Draft	0.03	April 10, 2001	Comments from editor incorporated
Initial Draft	0.04	May 15, 2001	Illustrations incorporated. Further edits incorporated. Index created.
Initial Draft	0.05	June 26, 2001	Incorporated comments from Bernard Kraemer for CFT release.
Initial Draft	0.06	Aug. 15, 2001	CFT version
Initial Draft	0.07	Aug. 30, 2001	Footers changed for CFT version

Copyright 2001 SOMA Networks, Inc.

All Rights Reserved.

SOMA Networks, Inc.
185 Berry Street
Suite 2000
San Francisco, CA 94107
U.S.A.
Phone +1 415 882 6500
Fax +1 415 882 6501

SOMA Networks, Inc.
312 Adelaide Street West
Suite 700
Toronto, ON M5V 1R2
Canada
Phone +1 416 977 1414
Fax +1 416 977 1505

SOMA, SOMA Networks, and the star-and-circle logo are trademarks of SOMA Networks, Inc. All of SOMA Networks' product names are trademarks of SOMA Networks, Inc. All other company and product names may be trademarks or registered trademarks of their respective owners.

SOMA Networks, Inc. assumes no responsibility for the accuracy or completeness of the information presented or for any use of the information contained in this document. SOMA Networks, Inc. reserves the right to, without notice, make change to its products as progress in engineering or manufacturing methods or circumstances may warrant.

Proprietary and Confidential

Important Safety Instructions

Installation

Read Instructions — All the safety and operating instructions should be read before the product is operated.

Retain Instructions — The safety and operating instructions should be retained for future reference.

Heed warnings — All warnings on the product and in the operating instructions should be adhered to.

Follow instructions — All operating and use instructions should be followed.

Ventilation — Slots and openings in the product housing are provided for ventilation and to ensure reliable operation of the product and to protect it from overheating. These openings must not be blocked or covered. The openings should never be blocked by placing the product on a bed, sofa, rug, or other similar surface. This product should not be placed in a built-in installation such as a bookcase or rack unless proper ventilation is provided or the manufacturer's instructions have been adhered to.

Power sources — This product should be operated only from the type of power source indicated on the marking label. If you are not sure of the type of power supplied to your home, consult your product dealer or local power company.

Grounding or polarization — This product is equipped with a plug that will fit into the power outlet only one way. If you are unable to insert the plug fully into the outlet, try reversing the plug. If the plug still fails to fit, contact your electrician to replace your outlet. To prevent electric shock, do not use this plug with an extension cord or outlet unless you can fully insert the blades without blade exposure. Do not defeat the safety purpose of this plug.

Power-cord protection — Power-supply cords should be routed so that they are not likely to be walked on or pinched by items placed upon or against them, paying particular attention to cords at the plug and the point where they exit from the product.

Accessories — To avoid personal injury or damage to the product, do not place it on an unstable cart, stand, tripod, bracket, or table.

Attachments — Do not use attachments unless recommended by the product manufacturer as they may cause hazards.

Water and moisture — Do not use this product near water or moisture.

Maintenance and servicing

Cleaning — Unplug this product from the wall outlet before cleaning. Do not use liquid cleaners or aerosol cleanser. Use a damp cloth for cleaning.

Servicing — Do not attempt to service this product yourself as opening or removing covers may expose you to dangerous voltage or other hazards. There are no user serviceable parts inside. Refer all servicing to qualified service personnel.

Replacement parts — When replacement parts are required, have the technician verify that the replacements being used have the same safety characteristics as the original parts. Use of replacement parts specified by the product manufacturer can prevent fire, electric shock, or other hazards.

Conditions requiring service — Unplug this product from the wall outlet and refer servicing to qualified service personnel under the following conditions:

- When the power supply or cord is damaged.
- If liquid has been spilled on, or objects have fallen into, the product or it has been exposed to water.
- If the product does not operate normally by following the operating instructions adjust only those controls that are covered by the operating instructions. Improper adjustment of other controls may result in damage and will often require extensive work by a qualified technician to restore the product to its normal operation.
- If the product has been dropped or the product housing has been damaged.
- When the product exhibits a distinct change in performance.

Alerts used in this guide

WARNING: Where you see this symbol and the WARNING heading, strictly follow the instructions to avoid personal injury or damage to the product.

WARNING: Where you see this symbol and the WARNING heading, strictly follow the instructions to avoid electric shock.

Regulatory Notices

This equipment has been tested and found to comply with the limits for a Class B digital device, pursuant to Part 15 of the FCC Rules. These limits are designed to provide reasonable protection against harmful interference in a residential installation. This equipment generates, uses and can radiate radio frequency energy and, if not installed and used in accordance with the instructions, may cause harmful interference to radio communications. However, there is no guarantee that interference will not occur in a particular installation. If this equipment does cause harmful interference to radio or television reception, which can be determined by turning the equipment off and on, the user is encouraged to try to correct the interference by one or more of the following measures:

- Reorient the receiving antenna.
- Increase the separation between the antenna and receiver.
- Move the computer away from the receiver.
- Connect the equipment into an outlet on a circuit different from that to which the receiver is connected.

Declaration of Conformity

We SOMA Networks, Inc.,
185 Berry Street, Suite 2000
San Francisco, CA 94107 U.S.A.
(415) 882-6500
declare under our sole responsibility that the product
SOMAport 140

Complies with Part 15 of the FCC Rules. Operation is subject to the following two conditions: (1) This device may not cause harmful interference, and (2) this device must accept any interference received, including interference that may cause undesired operation.

Contents

Important Safety Instructions. 5
Regulatory Notices 7

Introduction 11

Overview 12
The front panel 13
The back panel. 14
SOMAport 140 feature overview. 16

Installing the SOMAport 140. 17

Do you have everything? 18
Where to put the SOMAport 140 19
Installing the power supply. 21
Connection options for telephone equipment 23
Connecting telephone equipment directly to the SOMAport 140 25
Connecting telephone equipment to in-building telephone wiring. 26
Connecting a computer to the SOMAport 140 33
Connecting a LAN to the SOMAport 140 37

Maintaining the SOMAport 140. 39

Overview 40
Status LED 41
Signal Strength LEDs 42
Ethernet status LEDs 44

Troubleshooting and getting help 45

Phone or Internet performance problems. 46
Fault conditions and power problems. 48
Network connection problem 49
Data transmission problems. 51

Introduction

Use this guide to install the SOMAport 140 and connect it to the devices in your home, small office, or home office. You can connect phones, fax machines, dial-up modems, computers, and local area networks (LANs) to the SOMAport 140.

For more information about connecting and using the SOMAport 140, visit the SOMA Networks Web site.

Contents

Overview 12
The front panel 13
The back panel 14
SOMAport 140 feature overview 16

Overview

The SOMAport 140 is a compact terminal that uses wireless technology to bring telephone services and high-speed, always-on Internet services to your home, small office, or home office. The particular services you have access to depend on your service provider's offerings and the features you have purchased in your subscription package.

The SOMAport 140 has four RJ-11 phone jacks and provides you with four additional independently dialable phone lines. It also has one Ethernet port and one USB port that provide Internet access to your computer or LAN (when connected to a hub).

Other documents

Once you have installed the SOMAport 140 using this guide, you may have to refer to one or more of the following documents depending on the optional equipment you purchase.

- **Services Documentation** – This documentation comes from your service provider. It describes the telephone features and Internet access services that you can use once the SOMAport 140 is installed.
- **Uninterruptible Power Supply Quick Reference Card** – You will have this document only if you have purchased the optional uninterruptible power supply (UPS) that also functions as a battery backup. It describes how to install and maintain the UPS.
- **External Antenna Installation Guide** – You will have this document only if you have purchased the optional external antenna unit.

The front panel

There are five light-emitting diodes (LEDs) on the front panel of the SOMAport 140. These are status lights that indicate the state of the SOMAport 140. Their locations are shown below.

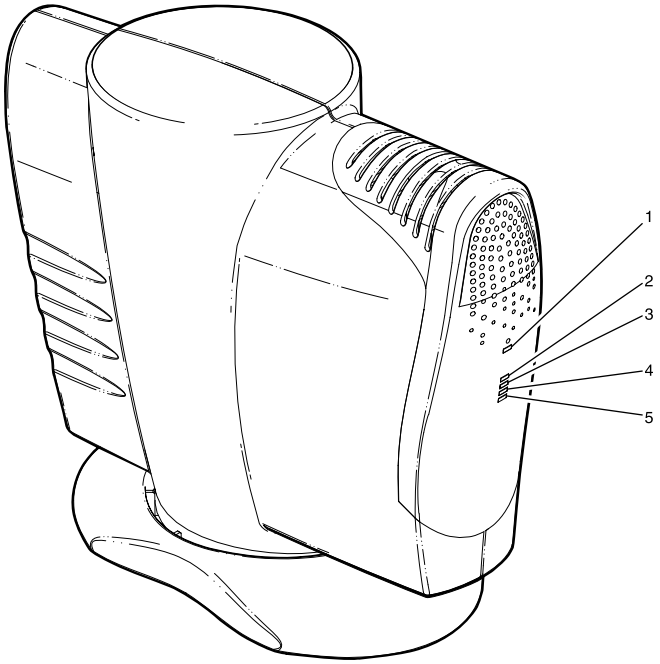

LEDs

The LEDs have the following functions.

LED	Description
1	The first LED is the Status LED. It indicates whether or not the SOMAport 140 is receiving power and functioning normally.
2 - 5	LEDs 2 through 5 make up the signal strength indicator. Together, these LEDs indicate how strong the signal is.

See the chapter "Maintaining the SOMAport 140" on page 39 for information about reading LEDs.

The back panel

The jacks and ports that are used to connect other devices to the SOMAport 140 are located on the back panel. A jack connects telephone equipment to the SOMAport 140, whereas a port connects computer equipment. The on/off switch is also located on the back panel. The locations of the connectors and switches are shown below.

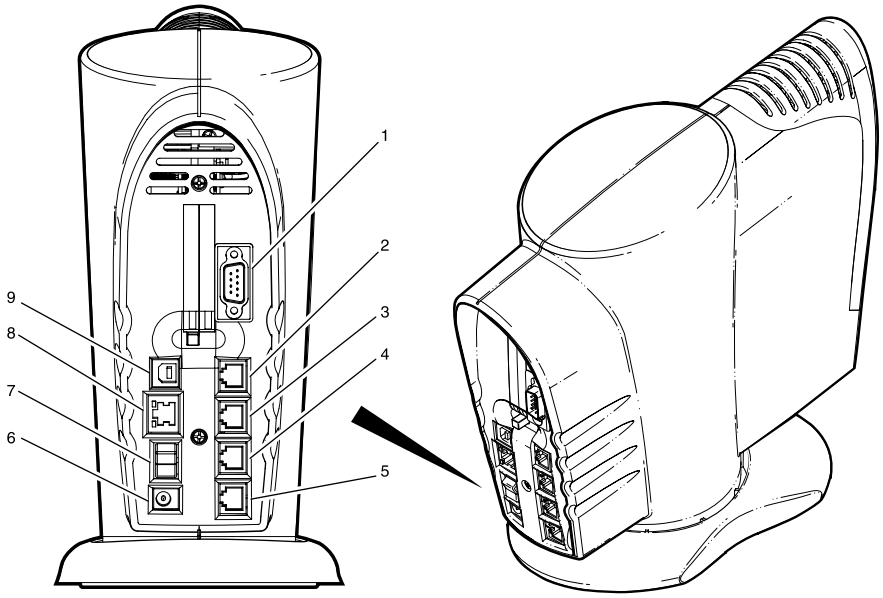

The connectors and switches on the back panel have the following functions.

#	Part	Description
1	Serial (RS-232) port	This port has a 9-pin D-style connector. The port can be used to connect an older PC—one that doesn't have an Ethernet port or universal serial bus (USB) port—with a crossover (null modem) cable.
2-5	Telephone (RJ-11) jacks	These jacks provide telephone services. They are used to connect phones, fax machines, or dial-up modems to the SOMAport 140. You will have 2 or 4 jacks, depending on the model you purchased.
6	Power jack	The power supply plugs into this jack.

#	Part	Description
7	On/Off Switch	This switch turns the SOMAport 140 on and off.
8	Ethernet (RJ-45) port	This port provides Internet services using standard 10Base-T Ethernet. You can connect a PC to it directly with a straight-through cable, or a hub with a crossover cable. The Ethernet LEDs are located on this port. They indicate the status of the Ethernet connection. See “Ethernet status LEDs” on page 44.
9	USB port	This port provides an alternative method for connecting a USB-compatible PC to the SOMAport 140.
10	PCMCIA slot	This slot is not functional at this time. It will be used in the future to add peripherals or enhanced functionality, such as additional memory. You will receive information about new functionality from your service provider as it becomes available.

SOMAport 140 feature overview

Antennas

Instead of using phone lines to bring services into your home or office, the SOMAport 140 uses wireless technology. Inside the SOMAport 140 is an antenna that receives radio signals from and transmits radio signals to a transmitting tower operated by your service provider. There is also an optional external antenna that can be ordered to boost performance if necessary.

The internal antenna

The internal antenna provides good reception in most situations. You do not have to aim this antenna because the direction of the antenna is controlled by software. The antenna automatically redirects itself to adjust to changes in signal strength.

SOMAport 140 performance depends on the strength of the wireless signal it receives. The distance from your service provider's nearest tower, the construction of the building or home, the surrounding terrain, and the placement of the SOMAport 140 can all have some effect on the signal strength.

The external antenna

Occasionally, conditions will not allow you to get a strong enough signal and you may need an external antenna. Contact your service provider or retailer for more information about obtaining an external antenna.

Uninterruptible power supply

The SOMAport 140 is shipped with a standard desktop power supply. This unit does not have battery backup capability. You can purchase an optional uninterruptible power supply (UPS) with battery backup capability. If there is a power outage, the UPS will continue to power your SOMAport 140. Contact your service provider or retailer for more information about purchasing a UPS.

Installing the SOMAport 140

This chapter describes how to connect telephone and computer equipment to the SOMAport 140.

Contents

Do you have everything? 18
Where to put the SOMAport 140 19
Installing the power supply 21
Connection options for telephone equipment 23
Connecting telephone equipment directly to the SOMAport 140 25
Connecting telephone equipment to in-building telephone wiring 26
Connecting a computer to the SOMAport 140 33
Connecting a LAN to the SOMAport 140 37

Do you have everything?

Unpack the SOMAport 140 from its box and make sure you have all of the pieces that are shown below.

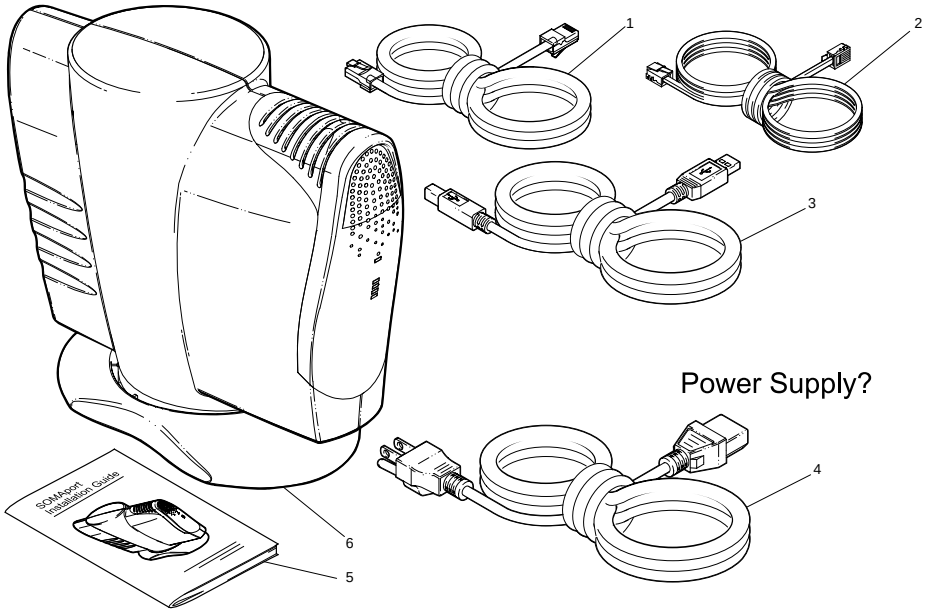

The pieces that are shipped in the box are as follows.

Part #	Description
1	RJ-45 Straight-Through 10 BaseT Ethernet Cable
2	RJ-11 Telephone Cable
3	USB Cable
4	Power Cord
5	The SOMAport 140 Setup Guide
6	The SOMAport 140

Where to put the SOMAport 140

Put the SOMAport 140 where you can reach it easily and where you can connect other devices to it with cables that do not exceed recommended maximum cable lengths.

Do not place the SOMAport 140 near a computer monitor. Doing so can cause interference.

Maximizing the signal strength

Like a radio receiver, the SOMAport 140 uses an antenna to receive radio signals from a transmitting tower. However, the SOMAport 140 has an internal antenna that is “smarter” than a typical radio antenna. You don’t have to aim this antenna yourself. It is software-controlled and changes direction automatically to maximize signal reception.

Recommendations

Though the SOMAport 140 internal antenna is self-aiming, you can take steps to optimize the quality of the signal reception and performance of the SOMAport 140.

- Allow at least 18 inches of space around the SOMAport 140.
- Avoid placing the SOMAport 140 close to certain electronic devices such as microwave ovens, cordless phones, and PCS phones.
- Place the SOMAport 140 as high up in your home or building as possible.
- Avoid putting it in the basement because the signal will be weakest there.
- Experiment with its exact placement and use the signal strength indicator to see if you can get a stronger signal.
- If you are having problems getting a strong signal, try placing the SOMAport 140 near a window.

WARNING: While this device is in operation, a separation distance of at least 20 centimeters (3.1 inches) must be maintained between the radiating antenna and the body of all persons exposed to the transmitter in order to meet the FCC RF exposure guidelines. No change to the antenna or device is permitted. Doing so may result in in the installed system exceeding the RF exposure requirements. This device must not be co-located or operating in conjunction with any other antenna or radio transmitter. Installers and end-users must follow the installation instructions provided in this user guide.

Maximum cable lengths

The different devices you connect to the SOMAport 140 require different types of cables. Each type of cable has a recommended maximum length. Cables that are longer than the recommended length can cause performance degradation.

If you have a number of devices that are distributed throughout your home or office, place the SOMAport 140 closest to the devices that have the shortest maximum cable length, as shown here.

Cable Type	Devices	Maximum Length
Telephone (RJ-11)	Phones, fax machines, dial-up modems	600 m (2000 feet)
Ethernet (RJ-45)	Ethernet-compatible PCs and hubs	100 m (328 feet)
USB	USB-compatible PCs and hubs	5 m (15 feet)
Serial	Older PCs that don't support Ethernet or USB;	15 m (50 feet)

Installing the power supply

The SOMAport 140 uses an external desktop power supply or an uninterruptible power supply (UPS). Instructions for installing the UPS are in the Uninterruptible Power Supply Quick Reference Card that is packaged with the UPS.

To install the power supply

WARNING: Use only the power supply and power cord that were shipped with the SOMAport 140. Using a different power supply may damage your equipment and poses the risk of shock or electrocution.

1. Insert the power supply's two-pin barrel connector into the power jack on the back of the SOMAport 140.
2. Insert the power cord's 3-prong female socket into the power supply's receptacle.
3. Insert the plug end of the power cord into the grounded power outlet.

WARNING: To prevent electric shock, match the wide blade of the plug to the wide slot in the outlet and fully insert it.

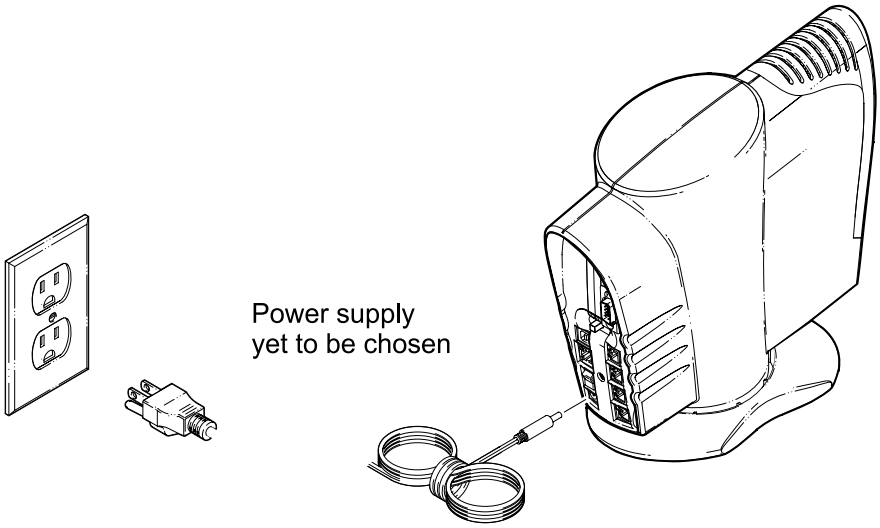

ATTENTION: If you need to disconnect the power supply, disconnect the power cord from the power outlet first. Then unplug the connector from the back of the SOMAport 140.

Connection options for telephone equipment

There are two ways to connect telephone equipment (phones, fax machines, dial-up modems) to the SOMAport 140. You can:

- Plug the telephone device directly into the SOMAport 140
- Connect the SOMAport 140 to your in-building telephone wiring

Because the SOMAport 140 has more than one phone jack, you can use both methods, connecting some devices directly to the SOMAport 140 and using one of the SOMAport 140's phone jacks to connect it to the in-building wiring.

Direct connections

You can use this method if the telephone and computer devices in your home or office are near each other and the SOMAport 140 can be placed close enough to allow direct connections to all of them, as shown in the following example.

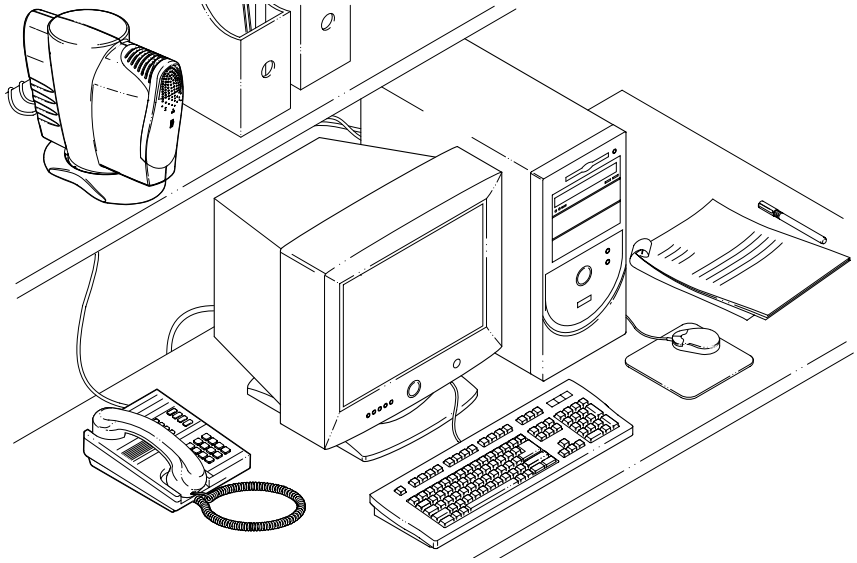

See page 25 for more information about directly connecting telephone equipment to the SOMAport 140.

In-building telephone wiring

When you plug the SOMAport 140 into a wall phone jack to use your building's existing telephone wiring, any other phones, answering machines, fax machines, and dial-up modems connected to the same phone line through other wall jacks will get telephone service from the SOMAport 140. All of the devices, however, will share the same line. This means that only one of the devices can be in use at any time.

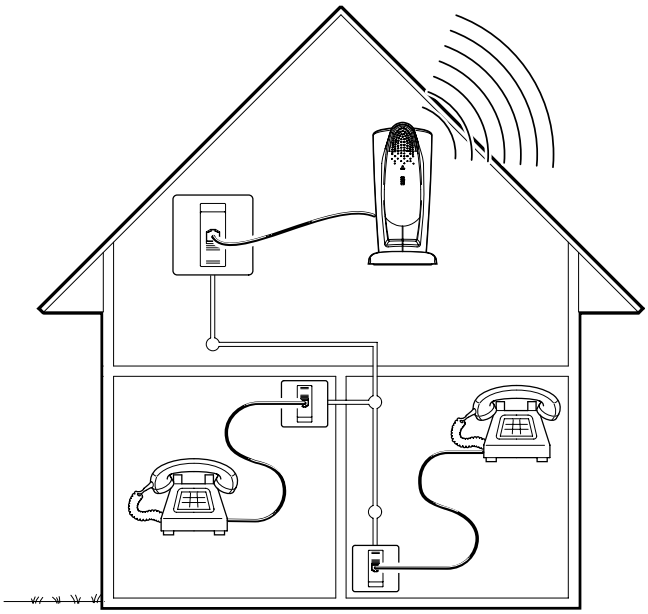

See page 26 for more information about connecting the SOMAport 140 to your in-building wiring.

Connecting telephone equipment directly to the SOMAport 140

When you plug a phone, fax machine, or dial-up modem directly into the SOMAport 140 it operates independently of any residential or small business in-building telephone wiring.

To connect phone equipment directly to the SOMAport 140

1. Insert one end of the RJ-11 cable into the RJ-11 jack on the phone, fax machine, or dial-up modem.
2. Insert the other end of the cable into the RJ-11 jack on the back of the SOMAport 140.

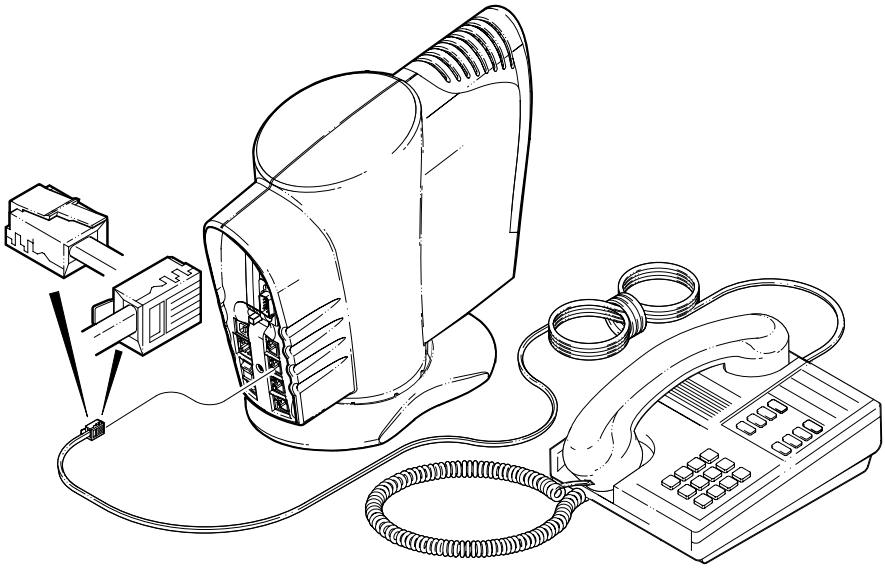

3. Connect any other equipment to the SOMAport 140 using the proper procedures.
4. Turn on the SOMAport 140.

Connecting telephone equipment to in-building telephone wiring

You can connect the SOMAport 140 to your in-building telephone wiring by plugging it into a wall phone jack. The benefit of using this method is that you can connect a number of telephone devices (phones, fax machines, dial-up modems) that are located in other rooms to the SOMAport 140. When you plug these devices into other phone wall jacks, they are connected to the SOMAport 140 through the wiring in your building. However, all of the connected devices share the same phone line so that only one of the connected devices can be in use at one time.

The telephone company connection

The phone line that the SOMAport 140 uses cannot also be connected to the telephone company. If both the telephone company and your service provider (via the SOMAport 140) try to provide service on the same line, there will be a conflict and the SOMAport 140 will not work. Only connect the SOMAport 140 to a phone line that is not connected to the phone company. If you get dial tone on a phone that is connected to a phone line (via a wall phone jack), then the line is connected to the phone company.

Using the second phone line wiring for the SOMAport 140

You can connect the SOMAport 140 to the in-building wiring if you have one, two, or more phone lines. The telephone wiring in most buildings contains two pairs of wires for two phone lines. One pair is for Line 1 and the other is for Line 2. (Older buildings may be wired for only one phone line and newer buildings may be wired for more than two lines.)

If you have two phone lines and want to connect the SOMAport 140 to the in-building wiring, it is recommended that you do the following:

- Leave Line 1 connected to the telephone company if you wish to continue using the telephone company for your phone service. Phone service can also be obtained through your service provider.
- Connect the SOMAport 140 to Line 2, making sure that Line 2 is disconnected from the telephone company.

- Connect additional telephones, fax machines, answering machines, and dial-up modems in other rooms to Line 2 (and, therefore, the SOMAport 140).

The wall phone jacks to which you connect the SOMAport 140 and the telephone devices it will run must:

- Be wired properly
- Be fitted with a special adapter called a two-line splitter that allows you to connect to both Line 1 and Line 2 (standard wall phone jacks allow you to connect to Line 1 only)

If you only have one phone line, see page 29 for information about connecting the SOMAport 140 to Line 1. If you have two or more phone lines, continue reading the following sections and then follow the steps for connecting to Line 2 on page 30.

To determine if wall phone jacks are properly wired

Check each wall jack into which you will be plugging either the SOMAport 140 or a telephone device to see if it is properly wired. Your building may have the necessary wiring, but the wires must also be correctly connected in each wall phone jack.

1. If there is an RJ-11 telephone cable plugged into the telephone wall phone jack, disconnect it.

2 Look at the telephone wall phone jack.

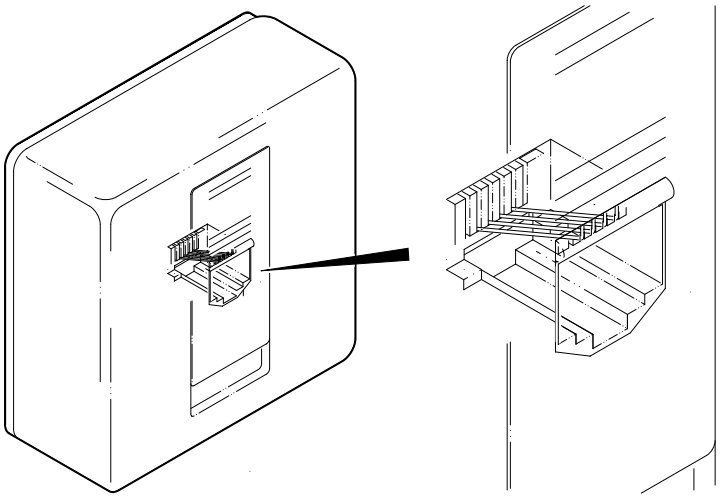

- If you see four pins, then the wall jack is probably wired for two phone lines.
- If only two pins are visible (the middle ones), then the jack is wired for one phone line.

  Connect telephone equipment directly to the SOMAport 140 or call the telephone company to rewire your jacks and in-building wiring for two lines.

Two-line splitters

In addition to making sure the wall phone jacks are properly wired, you need to be able to connect equipment to Line 2. Standard telephone wall phone jacks have only one connector that allows you to connect telephone equipment to Line 1. To use both lines, you need a special adapter called a two-line splitter. This is a 2-way jack that is plugged into a standard telephone wall phone jack. This special adapter can be purchased at most electronics stores and office supply stores.

The following illustration shows the front and back view of the two-way splitter.

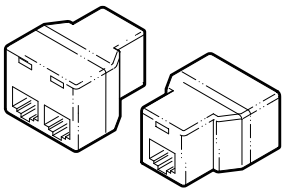

The connector on the left connects to Line 1. The one on the right connects to Line 2. (Note that some splitters have three jacks. The left connector is for Line 1, the middle one is for Line 2, and the right connector is for Lines 1 and 2 so that you can connect two-line phones.)

You will need a splitter for the jack into which you plug the SOMAport 140. You will also need a splitter for each wall phone jack into which you plug telephone equipment that connects to the SOMAport 140 through the in-building wiring.

To connect to Line 1

Use this method if you want to use in-building wiring and have only one phone line.

1. Plug a phone into the wall phone jack.
2. Check for dial tone.
   - If you get dial tone, the SOMAport 140 cannot use Line 1 because it is connected to the telephone company. Do one of the following:
     - Connect telephone equipment directly to the SOMAport 140 using the procedure on page 25.
     - Call the phone company and have them disconnect phone service on Line 1. Then go to step 3.
   - If you do not get dial tone, go to step 3.
3. To connect the SOMAport 140 to the in-building wiring, do the following:
   a. Insert one end of the RJ-11 cable into an RJ-11 jack on the SOMAport 140.

b Insert the other end of the cable into the wall phone jack.

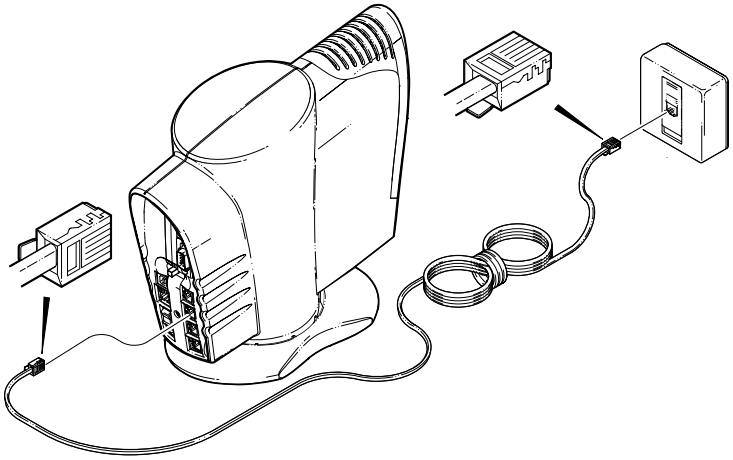

4 For each telephone device you want to connect to the SOMAport 140 via the wiring, insert the device's RJ-11 cable into the wall phone jack.

5 Connect any other equipment to the SOMAport 140 using the proper procedures.

6 Turn on the SOMAport 140.

To connect to Line 2

Use this method if you want to use in-building wiring and have two phone lines.

1 Plug a two-line splitter into the wall phone jack.

2 Plug a phone into the Line 2 jack (the one on the right if you have a 2-jack splitter, or in the middle if you have a 3-jack splitter).

3 Check for dial tone.

- If you get dial tone, call the phone company and have them disconnect phone service on Line 2. The SOMAport 140 will not work if the line is still connected to the phone company. Then go to step 4.
- If you do not get dial tone, go to step 4.

4 Connect the SOMAport 140 to the in-building wiring.

a Insert one end of the RJ-11 cable into an RJ-11 jack on the SOMAport 140.

b Insert the other end of the cable into the Line 2 jack (the one on the right if you have a 2-jack splitter, or the one in the middle if you have a 3-jack splitter).

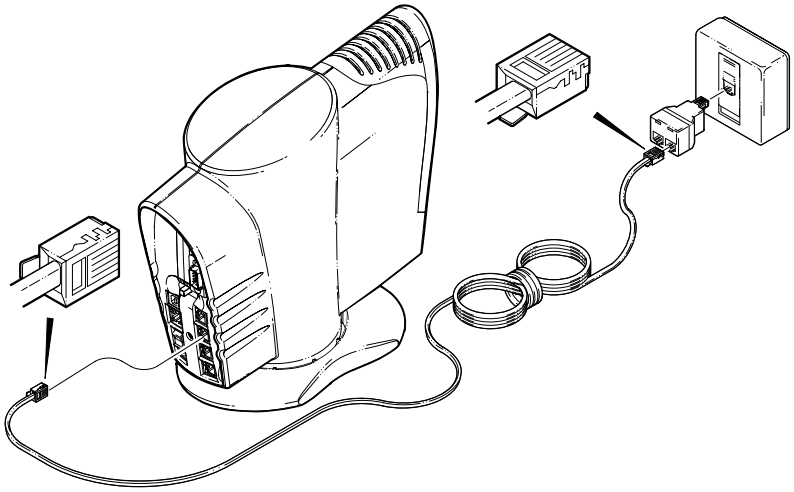

5 Connect other phone equipment, located in other rooms, to the SOMAport 140 using the in-building wiring.

a Insert a two-line splitter into each wall phone jack that will be used to connect telephone equipment to the SOMAport 140.

b Insert the device's RJ-11 cable into the Line 2 jack (the one on the right if you have a 2-jack splitter, or the one in the middle if you have a 3-jack splitter).

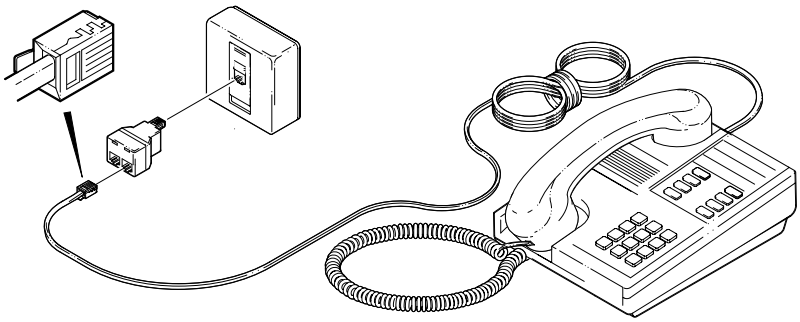

6 Connect any other equipment to the SOMAport 140 using the proper procedures.

7 Turn on the SOMAport 140.

Connecting a computer to the SOMAport 140

When you connect a computer to the SOMAport 140, you get high-speed Internet access that is always on.

Connection options

You can connect a computer to the SOMAport 140 in one of three ways.

Connection Option	Cable Type
If your computer has a network interface card (NIC), you can connect it to the SOMAport 140 with an 8-pin straight-through Ethernet cable.	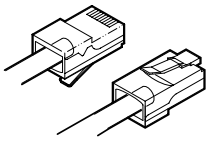
If your computer has a USB port you can connect it to the SOMAport 140 with a USB cable.	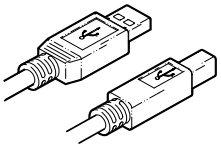
If you have an older computer that does not have a USB port or a NIC, use a serial cable. A serial cable is not shipped with the SOMAport 140. If you use this method, you must purchase one.	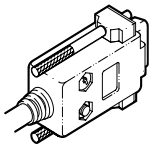

USB

USB is an alternative method of connecting the SOMAport 140 to your computer. For USB to work, your PC must have an operating system that supports USB. You need at least Windows 98 to use USB.

Even if you have a version of Windows that supports USB, you need to make sure your computer's USB port is enabled and properly set up.

To determine if the USB port is set up properly

1. Choose **Start** > **Settings** > **Control Panel**.
2. Double-click the **System** icon.
3. Open Device Manager.

- If you have Windows 98, click the **Device Manager** tab.
- If you have Windows 2000, click the **Hardware** tab and then click the **Device Manager** button.

4 Click the plus (+) icon next to the Universal Serial Bus Controller option.

If you see a USB host controller listed, USB is probably enabled. If you do not see this device listed, see your computer's documentation. If USB is not enabled, use the Ethernet port.

To connect a computer to the USB port

1 Turn off your computer.

2 Plug the square connector on the USB cable into the USB port on the back of the SOMAport 140.

3 Plug the flat connector into the USB port on your computer.

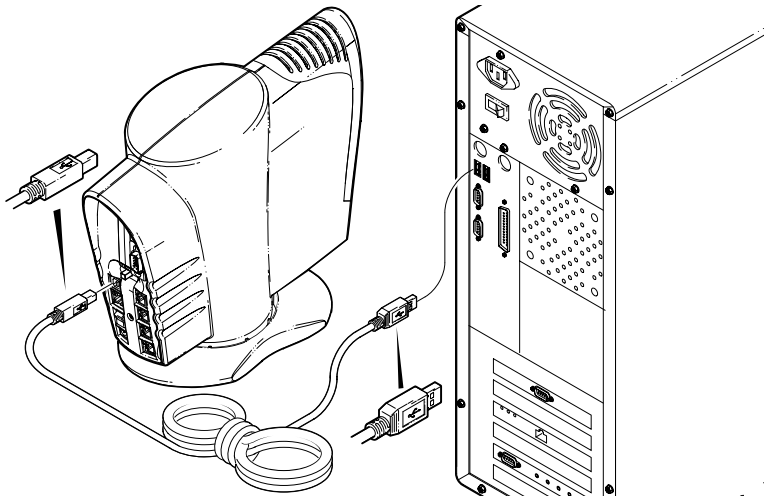

NOTE: Make sure the cable does not exceed the recommended maximum length of 5 m (15 feet).

4 Connect any other equipment to the SOMAport 140 using the proper procedures.

5 Turn on the computer.

6 Turn on the SOMAport 140.

To connect a computer to the Ethernet port

1. Turn off your computer.
2. Insert one end of the straight-through Ethernet cable into the Ethernet port on the back of the SOMAport 140.

   NOTE: Make sure the length of the cable does not exceed 100 m (328 feet).

3. Insert the other end of the cable into the Ethernet port on your computer.

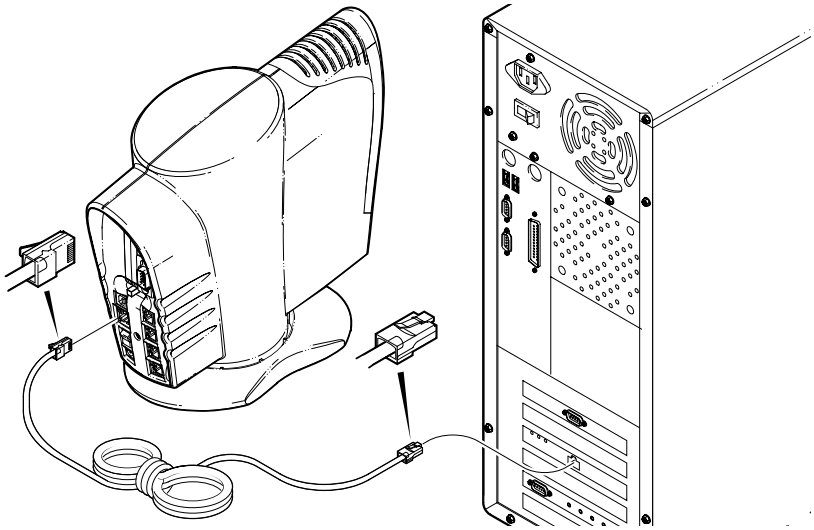

4. Connect any other equipment to the SOMAport 140 using the proper procedures.
5. Turn on the computer.
6. Turn on the SOMAport 140.

To connect a computer to the serial (RS-232) port

If your computer is older and does not have a NIC or a USB port, you can connect the SOMAport 140 to its serial port.

1. Turn off your computer.
2. Insert one end of the RS-232 cable into the serial port at the back of the SOMAport 140.

3 Insert the other end of the RS-232 cable into your computer's serial port.

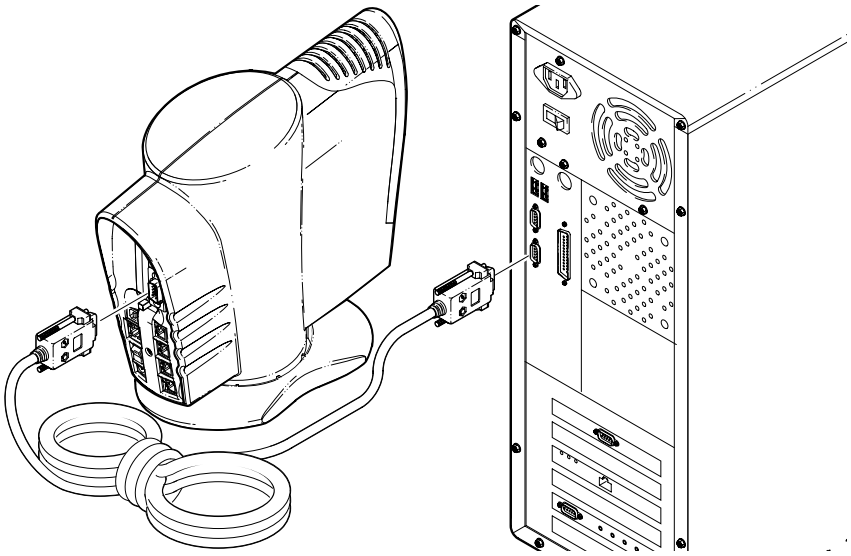

4 Connect any other equipment to the SOMAport 140 using the proper procedures.

5 Turn on the computer.

6 Turn on the SOMAport 140.

Connecting a LAN to the SOMAport 140

To provide Internet access to all of the PCs on your LAN, run a cable from the SOMAport 140 to your hub.

You can connect a hub to the SOMAport 140 using a crossover (null modem) cable.

Use a networking technology such as HomeRF, 802.11b, or HPNA. Enable all devices to have Internet access through the Ethernet port on the SOMAport 140.

To connect a hub to the SOMAport 140

1. Turn off the computer and the hub.
2. Insert one end of the straight-through Ethernet cable into the Ethernet port at the back of the SOMAport 140.
3. Insert the other end of the cable into any empty Ethernet port on your hub.

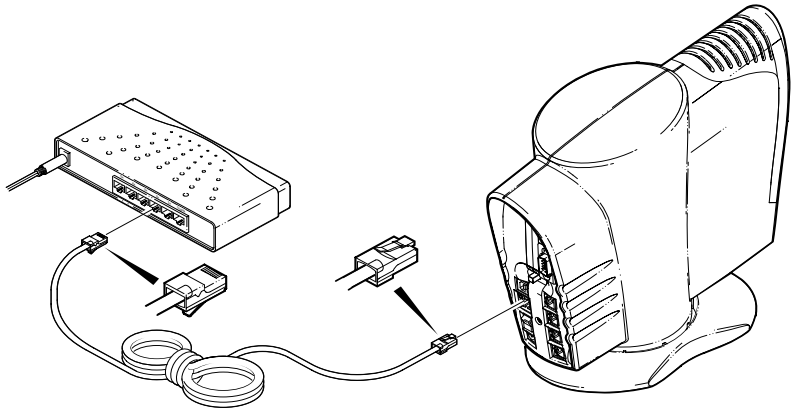

NOTE: Make sure the length of the cable does not exceed 100 m (328 feet).

4. Connect any other equipment to the SOMAport 140 using the proper procedures.
5. Turn on the hub and the computer.

6 Turn on the SOMAport 140.

Maintaining the SOMAport 140

Once you have installed the SOMAport 140, minimal upkeep and maintenance are required. This chapter describes how to read the LEDs so that you can recognize the operating status, strength of the radio signal, and Ethernet status.

Contents

Overview 40
Status LED 41
Signal Strength LEDs 42
Ethernet status LEDs 44

Overview

The SOMAport 140 does not require maintenance or servicing other than occasionally cleaning the outside of the unit. If you purchased the optional UPS/battery backup unit, you will have to replace the battery every 4 to 6 years (on average). The UPS will indicate when battery replacement will need to be performed. This is described in the Uninterruptible Power Supply Quick Reference Card that comes with the UPS.

Cleaning the SOMAport 140

Follow these guidelines to keep the SOMAport 140 clean.

- Wipe the unit down with a damp cloth periodically. Do not use cleaners or solvents.
- Do not spray cleaners or water on the SOMAport 140.
- If you spill liquid inside the SOMAport 140, unplug it immediately and call your service provider.

The SOMAport 140 LEDs

There are three sets of LEDs on the SOMAport 140. The status and signal strength LEDs are on the front of the SOMAport 140. The Ethernet LEDs are on the back of the unit. These are described in more detail on the following pages.

Status LED

The status LED is a bi-color LED that indicates whether or not the SOMAport 140 is powered on and operating normally. It can be either green or amber. It is the top LED bar on the front panel of the SOMAport 140 and is labeled with the number 1 below.

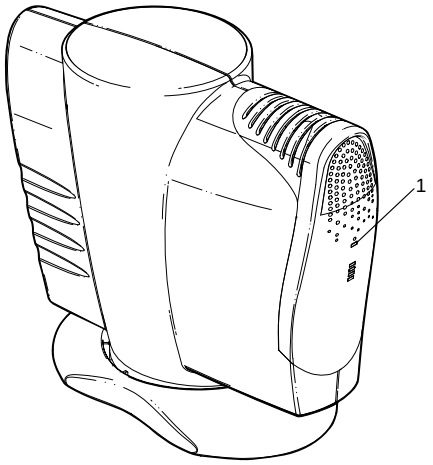

LED states

The following table shows the meaning of the possible LED states.

LED state	Description
Off	Power is not being supplied to the SOMAport 140. See "Fault conditions and power problems" on page 48.
Flashing (**WHAT COLOUR?**)	The SOMAport 140 is temporarily out of service while booting, performing self-tests, or loading new software.
Amber	The SOMAport 140 is out-of-service with a fault condition. See "Fault conditions and power problems" on page 48.
Green	The SOMAport 140 is on and operating normally.

Signal Strength LEDs

The signal strength indicator is made up of four LEDs. They are on the front of the SOMAport 140, below the status LED. The indicator is labeled with the number 2 below.

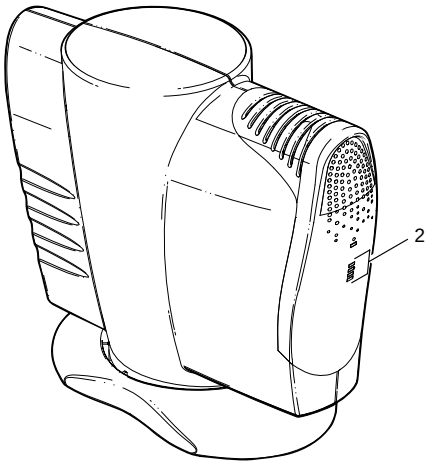

LED states

The following table lists what the five possible signal strength indicator states indicate.

LED Pattern	Indicates	Signal Strength
All four LEDs are off	The weakest signal	Less than 20%
One LED is on and three are off	A weak signal	20%–40%
Two LEDs are on and two are off	A medium signal	40%–60%
Three LEDs are on and one is off	A strong signal	60%–80%
All four LEDs are on	The strongest signal	More than 80%

What to do if the signal is weak

Radio signal strength can have an effect on the quality of your phone calls and your ability to access the Internet. If the signal is weak, you may experience noise or cutting out during phone calls. If you try to log on to the Internet while the signal is weak, you may notice that it takes a long time to open a Web page, or you may not be able to get on to the Internet at all until the signal is stronger.

If the signal is consistently weak and affecting performance see "Fault conditions and power problems" on page 48. If the recommendations made there do not solve your problem, you may have to order an external antenna unit.

Ethernet status LEDs

There are two Ethernet status LEDs. They are located on the Ethernet port on the back of the SOMAport 140.

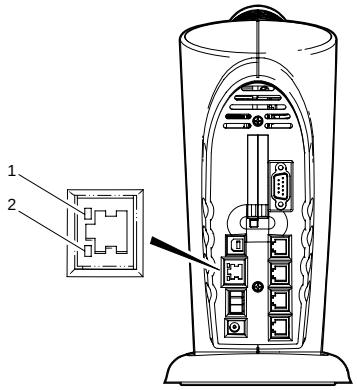

1 The Link LED (green)

2 The Data Transmit LED (amber)

LED states

The following table shows the meaning of the possible LED states.

Green LED State	Description
Off	No Ethernet carrier is present. See “Network connection problem” on page 49.
On	Ethernet carrier is present.
Amber LED State	**Description**
Off	The SOMAport 140 is not sending data over the network. See “Data transmission problems” on page 51.
Flashing	The SOMAport 140 is sending data over the network.

Troubleshooting and getting help

If there is a problem, look it up in this chapter and carry out the recommended actions. If the proposed solutions do not work, contact your service provider's technical support center.

Contents

Phone or Internet performance problems 46
Fault conditions and power problems 48
Network connection problem 49
Data transmission problems 51

Phone or Internet performance problems

If you are having any of the following problems, they may be due to a weak signal.

- While using the phone, the voice quality is poor or calls drop out.
- It takes a long time to open a Web page. This can also be a temporary problem that is due to Internet congestion.
- You cannot get on to the Internet at all. This can also be due to Internet congestion or a PC that is not properly configured.

To improve reception quality

Check the signal strength indicator to see if it indicates a weak signal (see page 42). If it does, try the following steps.

1. Make sure the SOMAport 140's location and environment follow the guidelines listed in "Where to put the SOMAport 140" on page 19.
2. See if a nearby appliance is having an effect on the signal. Do the following for each appliance, testing one appliance at a time.
   a. Turn off the appliance.
   b. While the appliance is off, check the signal strength indicator to see if the signal becomes stronger.
      - If there is an improvement, reposition either the appliance or the SOMAport 140 so that they are farther apart. To reposition the SOMAport 140, follow the steps on page XXX.
      - If there is no improvement, turn the appliance back on and try another appliance.

If you cannot improve the reception quality, the signal may weak due to one of the following factors. If the problem persists, contact your service provider to purchase an external antenna unit.

- There are obstructions—tall buildings, trees, or mountains—between your SOMAport 140 and the nearest transmitting tower.
- Your SOMAport 140 is located at the extreme outer limit of an area covered by the transmitting tower.

- There is bad weather—rain, ice, strong winds—in your area. The effect of weather on reception is temporary.

Fault conditions and power problems

The status LED on the front panel can indicate one of two problems.

- If the status LED is amber, the SOMAport 140 has detected a fault during the self-test. The self-test is run whenever the SOMAport 140 is powered on after being fully shut down. Reboot the SOMAport 140.
- If the status LED is off, the SOMAport 140 is not getting power. Check the power source.

To reboot after a fault condition

1. Turn the SOMAport 140 off and leave it off for at least 10 seconds.
2. Turn the SOMAport 140 back on.

   The SOMAport 140 takes 2 to 5 minutes to start up.
3. If the LED still indicates a problem, call your service provider.

To check the power

1. Check that the power cord is securely attached at both ends.
2. Check that the wall receptacle is working by plugging in an appliance that you know works.
3. Check the circuit breaker.
4. If you cannot find the source of the problem, call your service provider.

Network connection problem

If the green link LED on the Ethernet port is off, then there is no network connection and you will not be able to get on to the Internet. This can be due to excessive Ethernet traffic. However, if the problem persists, it may be due to a power or cable problem.

To find the source of the problem

1. Check the status LED to make sure the SOMAport 140 is receiving power. If the status LED is off, see "To check the power" on page 48.
2. Check the connections on the SOMAport 140 and the PC or hub to make sure they are secure.
3. Check the cable length.

IF the cable type is	THEN it should not exceed
Ethernet	100 m (328 feet)
USB	5 m (15 feet)
RS-232	15 m (50 feet)

4. Check the cable type.

IF the SOMAport 140 connects to	THEN make sure you are using a
the Ethernet port of a PC	straight-through cable This cable is shipped with the SOMAport 140.
the Ethernet port of a hub	crossover (null modem) cable This cable is not shipped with the SOMAport 140.

5. Test the cable.
   a. Turn off the SOMAport 140 and the computer or hub.
   b. Replace the cable with another one of the same type.
   c. Turn on the systems and see if you can get a connection.
6. If you are using a USB cable, there may be a problem with the USB port. Try getting a connection using an Ethernet cable.

a Turn off the SOMAport 140 and the computer or hub.

b Remove the USB cable.

c Use an Ethernet cable to connect the Ethernet port on computer or hub to the Ethernet port on the SOMAport 140.

NOTE: If connecting a PC use a straight-through cable. If connecting a hub, use a crossover (null modem) cable. See "Connecting a computer to the SOMAport 140" on page 33 or "Connecting a LAN to the SOMAport 140" on page 37.

d Turn on the systems and see if you can get a connection.

7 If you are using a USB extension cable, check to see if it is faulty.

a Turn off the SOMAport 140 and the computer or hub.

b Remove the USB extension and use a single USB cable. You may have to reposition the SOMAport 140 to do this.

c Turn on the systems and see if you can get a connection.

Data transmission problems

If you are trying to use the Internet but cannot, check the amber data transmit LED on the Ethernet port. If it is off while you are trying to use the Internet, then the SOMAport 140 is not sending data over the network. If there is no problem with the cabling, this can indicate a problem with your PC configuration.

To check the cabling and your PC configuration

1. Make sure there is an Ethernet connection and check the cabling. See "Network connection problem" on page 49.
2. Make sure the SOMAport 140 is connected to your computer or hub in one of the following ways.
   - The SOMAport 140 is connected directly to a PC using a straight-through cable.
   - The SOMAport 140 is connected to the regular port of a hub using a crossover cable.
   - The SOMAport 140 is connected to the uplink port of a hub using a straight-through cable.

   If the LED is still not lit, there is an electrical problem (WITH WHAT?). Call your service provider. NEED TO BE CLEAR ABOUT WHAT TO DO NEXT? GO ON?
3. Make sure the SOMAport 140 was assigned an IP address. This is supposed to happen the first time you turn it on.
   a. Check your PC configuration

IF you have	THEN
Windows 2000	
Windows 98	
Windows 95	

   b. Check that the SOMAport 140 was assigned an IP address.
      - If an address was assigned, the account you have with your service provider may not be set up for Internet access. Go to your service provider's registration Web page or call your service provider for details.
      - If an address was not assigned, call your service provider for technical support.

Index

A

adaptors, 28–29
answering machine. *See* telephone equipment
antennas, 15, 19, 46
    documentation, 10

B

battery backup, 15
    reference card, 10

C

cables
    maximum length, 19–20
    testing, 49–50
computer equipment
    checking configuration, 51
    connecting to a SOMAport 140, 13–14, 33
        using a serial port, 35–36
        using a USB port, 34
        using an Ethernet port, 35
    maximum cable length, 19–20
connecting
    a LAN to a SOMAport 140, 37
    computer equipment to a SOMAport 140, 13–14, 33
        using a serial port, 35–36
        using a USB port, 34
        using an Ethernet port, 35
    telephone equipment to a SOMAport 140, 13–14, 23–24
        directly, 25
        using a separate line, 26–27, 30–31
        using the main line, 26, 29–30
connection problems
    Internet, 46, 51
    network, 49–50
connectors, **13–14**, 29, 34

D

data transmission
    troubleshooting, 51
dial tone
    main telephone line, 29
    secondary telephone line, 30
dial-up modems. *See* telephone equipment
disconnecting
    power supply, 22
documentation, 10

E

Ethernet cable, **20**
    troubleshooting, 49
Ethernet port, **14**
    connecting computer equipment to, 35
    LED problem, 49
Ethernet status LEDs, 44
external antenna, 15
    documentation, 10
    reasons to purchase, 46

F

fault conditions, 48
fax machines. *See* telephone equipment
features
    SOMAport 140, 15
flat connector, 34
    See also connectors

Page numbers in **bold** point to information in tables and figures.

front panel, 12

H

hub
  connecting to a SOMAport 140, 37

I

installing
  power supply, 21
internal antenna, 15, 19
Internet
  problems, 46
  troubleshooting connection, 51
IP address, 51

J

jacks. *See* telephone jacks *and* power jack

L

LAN. *See* hub
LEDs, 12, 40
  Ethernet status, 44
  problem states, 48, 49
  RSSI, 42
  status, 41
light-emitting diodes. *See* LEDs
link LED
  problem state, 49

M

maintenance
  cleaning SOMAport 140s, 40
  solving weak signal problems, 43
models
  SOMAport 140, 10

N

network connection
  troubleshooting, 49–50
network interface card. *See* NIC
NIC, **33**

P

panels, 12–14
PCMCIA slot, **14**
PCs. *See* computer equipment
ports, 13–14
power jack, **13**
power supply
  installing and disconnecting, 21
  troubleshooting, 48

R

radio signals
  reception quality, 15
    improving, 46
    optimizing, 19
  strength levels, 42–43
rebooting
  SOMAport 140s, 48
received signal strength indicator. *See* RSSI
reference card, 10
related documentation, 10
RS-232 cable, **20**
RS-232 port, **13**
RSSI LEDs, **12**, 42

S

serial cable, **20**
  See also cables
serial port, **13**
  connecting computer equipment to, 35–36
services documentation, 10
signals. *See* radio signals
SOMAport 140s
  features, 15
  models available, 10
  optmizing performance of, 19
  parts shipped, 18
splitters, 28–29
square connector, 34
  See also connectors
status LED, **12**, 41
  problem states, 48
switches, **13–14**

T

telephone cable, **20**
telephone equipment
  connecting to a SOMAport 140, 13–14, 23–24

directly, 25
using a separate line, 26–27, 30–31
using the main line, 26, 29–30
maximum cable length, 19–20
telephone jacks, 13
checking the wiring of, 27–29
testing
cables, 49–50

U

universal serial bus port. *See* USB port
upkeep. *See* maintenance
USB cable, **20**
testing, 49
USB port, **14**
checking for proper setup, 33
connecting computer equipment to, 34
support required for, 33

W

Windows requirement, 33
wiring
checking telephone jacks, 27–29
in-building, 24, 26