soma NETWORKS™

Macro Base Station Installation Procedures (NPM-1000)

Release 2.0

Part ######A revision 00a-DRAFT
March 29, 2006

Copyright 2006 SOMA Networks, Inc.

SOMA Networks, Inc.
185 Berry Street
Suite 4600
San Francisco, CA 94107
U.S.A.
Phone +1.415.882.6500
Fax +1.415.882.6501

SOMA, SOMA Networks and the star-and-circle design are trademarks or registered trademarks of SOMA Networks, Inc in the United States and other countries. All SOMA Networks product names are trademarks of SOMA Networks, Inc. All other company and product names may be trademarks or registered trademarks of their respective owners.

Products and services of SOMA Networks, Inc. may be protected by one or more pending or issued U.S. or foreign patents.

SOMA Networks, Inc. reserves the right to, without notice, make changes to its products as progress in engineering or manufacturing methods or circumstances may warrant.

FCC Warning

This equipment has been tested and found to comply with the limits for a Class A digital device, pursuant to Part 15 of the FCC Rules. These limits are designed to provide reasonable protection against harmful interference when the equipment is operated in a commercial environment. This equipment generates, uses, and can radiate radio frequency energy and, if not installed and used in accordance with the instruction manual, may cause harmful interference to radio communications. Operation of this equipment in a residential area is likely to cause harmful interference, in which case the user will be required to correct the interference at his or her own expense.

Regulatory Information

This equipment complies with the following regulatory certifications:

FCC Part 15, Part 24 (PCS models), Part 27 (MMDS, WCS, Lower 700 MHz models)
ETSI 301 753 (3.5 GHz, ITU 1098 models)

PREFACE

This book explains how to install a SOMA NPM-1000 macro base station. Installation includes installing the racks, connecting the base station to the network core, and powering on the system.

This book is intended for field technicians with experience installing and configuring telecommunications equipment at cellular base stations and network operations centers.

Related Documentation

SOMA Documentation Suite

Table 1 shows the guides in the SOMA service provider documentation suite.

Book	Description
Alarms and Events Reference	Comprehensive list of alarms and events
Core Server Installation Procedures	Procedures for installing and maintaining a core server
Diagnostics Reference	Description of the diagnostics
Macro Base Station Hardware Reference	Description of the base station hardware architecture
Macro Base Station Installation Procedures	Procedures for installing a base station
Macro Base Station Maintenance Procedures	Procedures for performing preventive and corrective maintenance on a base station
Macro Base Station Provisioning Procedures	Procedures for provisioning system equipment after installation
Network Deployment Planning Guide	Information required when deploying the system
System Administration Reference	Description of utilities and administration activities
System Overview	Complete solution overview

Table 1 Customer Documentation Components

Third-Party Documentation

Table 2 shows third-party documents that provide additional information which may be useful when installing the base station.

Document	Description
Central Office Environment Installation/Removal Generic Requirements (GR-1275-CORE)	Available from Telcordia Technologies, Inc. Provides generic installation requirements for telecommunication suppliers and carriers.
Zyfer AccuSync-R GPS Synchronized Time and Frequency Instrument User's Manual (377-8006)	Available from Zyfer, Inc. Provides installation, configuration, and operational information about the GPS clock module used in +24V base stations.
CPC4400 Ethernet Switching Platform User's and System Integrator's Guide	Available from Performance Technologies Inc. The manual describes the Ethernet switch and rear I/O card in detail.
Concurrent Technical Reference Manual for PP310 Single Board Computer	Available from Concurrent Technologies Inc. The manual describes the processor cards in detail.

Table 2 Third-Party Documentation

Conventions

This section outlines the conventions used in this guide.

Measurement Conventions

Measurements in this guide are expressed according to the Systeme International d'Unites (SI) standards for metric units and abbreviation. Equivalent Imperial measurements (used in the United States) are provided in parentheses, except when Imperial is the international standard.

Bits and Bytes

For clarity, bits and bytes are not abbreviated in this document, but their prefixes are. SOMA Networks follows the common practice of using SI prefixes (base 10) with these terms. Thus, 1 kbit/s (kilobit per second) is equivalent to 1000 bits/s; it should not be confused with 1 Kibit/s (kilobinary bit per second) or $1 \times 2^{10} = 1024$ bits/s.

Unless otherwise specified, SI prefixes with bits and bytes in this document refer to a power of 10.

Typographical Conventions

Table 3 shows how different fonts are used throughout this guide.

Font	Usage	Example
`Courier`	System output and all things involving source code (commands, samples, methods, functions, objects, variables, types, constants, fields, properties, and structures)	`echo "NETWORKING=yes` `HOSTNAME=soma`
`Courier bold`	User-keyed commands	**`eject cdrom`** ↵
Arial gray	Interface objects: buttons, links, fields, and drop-down list names	Click **OK**.
Italics	Anything that appears as part of the file system, such as files, applications, paths, directories, libraries, scripts, daemons, devices, and commands with parameters when used as a noun	Data is in *subscribers/billing* All devices use *devfs*.
`Courier` **bold** *italic*	Placeholders in commands	**`boot cdrom -install arg`** ↵
`Courier italic`	Placeholders in code	`n urn:soma:dialplan:`*`domain`*

Table 3 Display Font Usage

Table 4 shows the meaning of symbols used in procedures throughout this guide.

Symbol	Meaning	Example
↵	Indicates that you should press the Return, or Enter, key	**`su admin`** ↵
+	In a keystroke combination, indicates that you should press the keys simultaneously	Control+Alt+Delete
,	In a keystroke combination, indicates that you should press the keys consecutively	Control, Shift, q
→	Indicates that you should choose a menu option or a submenu	Choose File→Import→Formats

Table 4 Symbols Used in Procedures

Special Information

Information of special importance is highlighted in the text using indentation and icons. The following examples show the special information types used in the document. They are listed in ascending order of importance.

NOTE: A note contains information of special interest.

CAUTION: A general caution is shown when there is a risk of affecting service.

WARNING: A general warning is shown when there is a risk of personal injury from a nonelectrical hazard or a risk of irreversible damage to data, software, or the operating system.

WARNING: An electrical warning is shown when there is danger of physical harm to a person or damage to equipment due to electrical hazard.

Document Change History

Table 5 shows the change history for this document.

Revision	Date	Change Summary
00a	March 29, 2006	Initial release for R2.0

Table 5 Document Change History

CONTENTS

Chapter 1 Installation Overview 13

Installation Process Summary 14
Necessary Conditions for Installation 15

Chapter 2 Site Preparation 17

Physical Requirements 18
Environmental Requirements 21
Electrical Requirements 23
Network and Backhaul Requirements 29
General Site Requirements 30

Chapter 3 Pre-Installation Procedures 35

Preparing for Installation 36
Antistatic Precautions 37
Equipment, Tools, and Supplies Checklists 38
Unpack the Equipment 40
Review Site Deliverables List 41

Configuring Cards 42
CPC4400 Ethernet Switch 43
Concurrent 310 Processor Card 45

Chapter 4 Base Station Installation Procedures 47

Installing the Racks 48
Prepare the Location 49
Position the Racks 50
Secure the Racks 51

Attaching Ground and Power Cables 53
Check PDP Sector Configuration 54
Ground the Racks 55
Attach the Main and Return Power Cables 57

Attaching the Shelves and Modules 59
Radio Rack Layout 60
RF Rack Layout 61
Attach the Radio Shelves to the Radio Rack 62
Cover Empty Radio Bays 63
Attach the Utility Shelf to the Radio Rack 64
Install the GPS Clock Module 65
Install the RFSS Modules 66
Cover Empty RFSS Slots 67

Populating the Shelves **68**
Shelf Layout 69
Insert CompactPCI Power Supplies 73
Test CompactPCI Power Supplies 74
Insert the Radio and Utility Shelf Cards 75
Cover Unused Card Slots 77

Connecting the Cables **78**
Connect the PDP Power Cables 79
Connect the RFSS Signal Cables 83
Connect the Alarm Cables 85
Connect the Ethernet Cables 86
Connect the Clock Cables 87
Connect the RF Cables 88
Connect Ferrite Blocks 90

Chapter 5 Antenna Installation Procedures **91**

Install the GPS Antennas 92
Install the Main and Diversity Antennas 94
Measure VSWR and Return Loss 97
Measure the Distance to a Fault 99

Chapter 6 On-Site Configuration procedures **101**

Power On the Base Station 102
Configure GPS Clock Module 104
Post-Installation Activities 110

Appendix A Decommissioning Procedures **111**

Decommission a Basestation 112

Appendix B Adding Additional Sectors **113**

Pre-Upgrade Preparation 114
Adding Sectors to a Base Station 116
Performing the Cutover and Power-On 117
Acceptance Test Plan for Base Station Upgrade 118

LIST OF TABLES

Chapter 1 Installation Overview
Table 1.1 Installation Process Summary 14

Chapter 2 Site Preparation
Table 2.1 Rack Dimensions 18
Table 2.2 Weight of Base Station Components 19
Table 2.3 Base Station Floor Loading 19
Table 2.4 Torque Values of Threaded Fasteners 20
Table 2.5 Temperature Requirements 21
Table 2.6 Humidity Requirements 21
Table 2.7 Altitude Requirements 21
Table 2.8 Heat Output (+24V Systems) 22
Table 2.9 Heat Output (–48V Systems) 22
Table 2.10 Power Consumption Values (+24V) 24
Table 2.11 Power Bay Circuit Breaker Sizes (+24V) 24
Table 2.14 Power Consumption Values (–48V) 26
Table 2.15 Power Bay Circuit Breaker Sizes (–48V) 27

Chapter 3 Pre-Installation Procedures
Table 3.1 Recommended Test Equipment 39
Table 3.2 Recommended Software 39
Table 3.3 Inventory Checklists 41
Table 3.4 CPC4400 Jumper Settings 43
Table 3.5 Concurrent 310 BIOS Settings 45
Table 3.6 Concurrent 310 Switch Settings 45

Chapter 4 Base Station Installation Procedures
Table 4.10 Ethernet Cabling 86

Chapter 5 Antenna Installation Procedures
Table 5.2 Supported Base Station Spectrum 98

Chapter 6 On-Site Configuration procedures

Appendix A Decommissioning Procedures

Appendix B Adding Additional Sectors

LIST OF FIGURES

Chapter 1 Installation Overview

Chapter 2 Site Preparation
Figure 2.1 Rack Dimensions 18
Figure 2.2 Base Station Power and Ground Cabling 23
Figure 2.3 Base Station Power and Grounding Cabling 26
Figure 2.4 Correct Ground Fastening Technique 33

Chapter 3 Pre-Installation Procedures
Figure 3.1 Wrist-Strap Grounding Point 37
Figure 3.2 CPC4400 Jumper Configuration 44
Figure 3.3 Concurrent 310 Switch Configuration 46

Chapter 4 Base Station Installation Procedures
Figure 4.1 Rack Positions 50
Figure 4.2 Junction Bar and Support Bolt Hole Locations 51
Figure 4.3 PDP Sector Switch 54
Figure 4.4 Ground Cables 55
Figure 4.5 Compression Lug Dimensions 55
Figure 4.6 Ground Terminals on the PDP 56
Figure 4.7 Main and Return Power Terminals 58
Figure 4.8 Radio Rack Layout 60
Figure 4.9 RF Rack Layout 61
Figure 4.10 Utility Shelf Layout (Front View) 69
Figure 4.11 Utility Shelf Layout (Rear View) 70
Figure 4.12 Radio Shelf Layout (Front View) 71
Figure 4.13 Radio Shelf Layout (Rear View) 72
Figure 4.14 Card Insertion 75
Figure 4.15 Radio Rack Connector Layout 79
Figure 4.16 RF Rack Connector Layout 80
Figure 4.17 RFSS Signal Connector Layout 83
Figure 4.18 RF Connector Locations 88
Figure 4.19 Ferrite Block Installation 90

Chapter 5 Antenna Installation Procedures
Figure 5.1 GPS Antenna Assembly 92

Chapter 6 On-Site Configuration procedures

Appendix A Decommissioning Procedures

Appendix B Adding Additional Sectors

Chapter 1

INSTALLATION OVERVIEW

This chapter provides an overview of the installation process. Please familiarize yourself with the installation process in general before proceeding to the next chapter.

Contents

Installation Process Summary 14
Necessary Conditions for Installation 15

Installation Process Summary

Installation of the NPM-1000 SOMA macro base station should take approximately two to three days, assuming the site already meets the requirements specified in Chapter 2, "Site Preparation".

Three people should be present during the installation, especially when moving base station equipment.

Table 1.1 lists the procedures to install the base station.

Step	Chapter Title	Page	Procedures
1	Site Preparation	17	Ensure that the installation site is equipped to handle the base station. Collect information and add additional infrastructure if necessary.
2	Pre-Installation Procedures	35	Unpack the racks. Review checklists to ensure you have the required equipment, software, and tools to perform an installation.
3	Base Station Installation Procedures	47	Install the racks. Connect ground and power. Add components to their respective shelves. Attach cables.
4	Antenna Installation Procedures	91	Install and test the required antennas, such as main, diversity..
5	Power-On Procedures	107	Apply power to the base station. Perform basic system verification tests.
6	On-Site Configuration procedures	101	Configure individual systems on the base station.

Table 1.1 Installation Process Summary

Appendix A contains the procedure for decommissioning the base station.

Appendix B contains the procedure for upgrading the base station.

See "Post-Installation Activities" on page 110 for information about additional tasks that must be performed for the base station to be fully functional.

Necessary Conditions for Installation

The installation procedures in this manual assume that the following conditions have been met:

- The core servers located at the network operations center (NOC) are operational
- A backhaul connection between the base station site and NOC is installed.
- The backhaul has been tested and is connected to the site's edge router.
- Each of the utility bus and radio sector controllers is configured in its BIOS to boot from the correct source.
- At least one of the hard disk drives in the base station contains the required software images.
- A power supply that meets the specifications listed in "Electrical Requirements" on page 23 has been installed.

NOTE: If these conditions are not met, it is still possible to complete the physical installation of the base station. However, you will not be able to boot the base station and provide cell coverage until you satisfy these conditions.

Chapter 2

SITE PREPARATION

This chapter identifies the requirements that your site needs to meet before you can proceed with the installation of the base station. Please review these requirements before proceeding to the next chapter.

Contents

Physical Requirements 18
Environmental Requirements 21
Electrical Requirements 23
Network and Backhaul Requirements 29
General Site Requirements 30

Physical Requirements

Before you begin installing the base station, read the following physical requirements. Ensure that each requirement is met before proceeding with the installation, and consult your methods of procedures (MOPs) for information concerning transportation method, route, and precise installation location.

WARNING: Failure to meet the following requirements may result in personal injury and cause damage to or destruction of the base station and surrounding equipment.

Space

Table 2.1 and Figure 2.1 show the physical dimensions of the racks. These dimensions do not include space for cabling, the insertion and removal of modules, or adequate airflow.

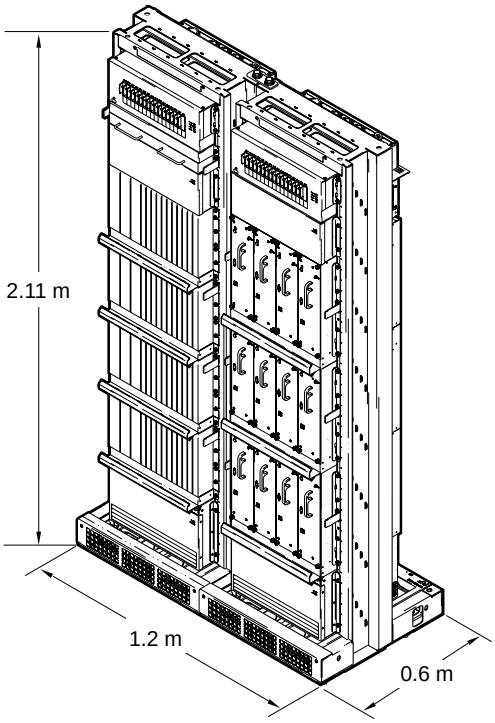

Figure 2.1 Rack Dimensions

Racks	Width	Height	Depth
One rack	0.6 m (23 5/8 inches)	2.11 m (83 inches)	0.6 m (23 5/8 inches)
Two racks	1.2 m (47 1/4 inches)	2.11 m (83 inches)	0.6 m (23 5/8 inches)

Table 2.1 Rack Dimensions

Weight

A dolly or crane is required to move the racks. Table 2.2 shows the weight of the major components.

Component	WCS	MMDS	PCS	3.3/3.5 GHz
Empty single rack	70.3 kg (155 pounds)	70.3 kg (155 pounds)	70.3 kg (155 pounds)	70.3 kg (155 pounds)
RF rack, filled to capacity	331.1 kg (730 pounds)	346 kg (762 pounds)	291 kg (642 pounds)	346 kg (762 pounds)
Radio rack, filled to capacity	207.3 kg (457 pounds)	207.3 kg (457 pounds)	207.3 kg (457 pounds)	207.3 kg (457 pounds)
Utility or radio shelf, empty	6.5 kg (14.3 pounds)	6.5 kg (14.3 pounds)	6.5 kg (14.3 pounds)	6.5 kg (14.3 pounds)
RFSS module	14.1 kg (31.0 pounds)	16 kg (35 pounds_	11.3 kg (25 pounds)	16 kg (35 pounds_
Lower cooling unit	10.5 kg (23.2 pounds)	10.5 kg (23.2 pounds)	10.5 kg (23.2 pounds)	10.5 kg (23.2 pounds)
Upper cooling unit	8.5 kg (18.8 pounds)	8.5 kg (18.8 pounds)	8.5 kg (18.8 pounds)	8.5 kg (18.8 pounds)
Power distribution panel (PDP)	18.1 kg (40 pounds)	18.1 kg (40 pounds)	18.1 kg (40 pounds)	18.1 kg (40 pounds)

Table 2.2 Weight of Base Station Components

Floor Loading

Table 2.3 shows the floor loading for a fully loaded base station.

Version	Floor Loading
WCS	351 kg/m^2 (71 pounds/foot^2)
MMDS	360 kg/m^2 (73 pounds/foot^2)
PCS	323 kg/m^2 (66 pounds/foot^2)
3.3/3.5 GHz	360 kg/m^2 (73 pounds/foot^2)

Table 2.3 Base Station Floor Loading

NOTE: Floor-loading values are calculated as per *Telcordia Technologies GR-1275-CORE.*

Torque Values

Table 2.4 shows the recommended torque values for the different sizes of fasteners used in the racks. Unless otherwise specified, torque tolerances are ±2 inch-pounds.

Fastener Size	Recommended Torque	Fastener Size	Recommended Torque
#4 (0.112-inch) screw	6 inch-pounds	SMA connector	5 inch-pounds
#6 (0.138-inch) screw	12 inch-pounds	Type-N connector	12 inch-pounds
#8 (0.164-inch) screw	18 inch-pounds	7/16 DIN connector	17 foot-pounds
1/4-inch PDP compression lug nuts	78 inch-pounds	RFSS module thumb screws (#6 screw)	12 inch-pounds
5/16-inch screw	50 inch-pounds	Power cable screws	8 inch-pounds

Table 2.4 Torque Values of Threaded Fasteners

Environmental Requirements

Before you begin installing the base station, read the following environmental requirements. Ensure that each requirement is met before proceeding with the installation and consult your MOPs for procedures concerning building requirements, hazardous materials and waste, and environmental systems.

WARNING: Failure to meet the following requirements may result in personal injury and cause damage to or destruction of the base station and surrounding equipment.

Temperature

The base station is designed to be installed in a temperature-controlled environment. Table 2.5 shows the ambient temperature requirements.

Operational State	Temperature Requirement
Operating	+5°C to +40°C (+41°F to +104°F)
Short-term operation (less than 96 hours/year)	–5°C to +50°C (+23°F to +122°F)
Storage	–40°C to +60°C (–40°F to +140°F)

Table 2.5 Temperature Requirements

Humidity

The base station is designed to be installed in a humidity-controlled environment. Table 2.6 shows the humidity requirements.

Operational State	Humidity Requirement
Operating	5% to 85% relative humidity, noncondensing
Short-term operation (less than 96 hours/year)	5% to 90% relative humidity, noncondensing
Storage	5% to 95% relative humidity, noncondensing

Table 2.6 Humidity Requirements

Altitude

Certain components in the base station are sensitive to altitude. Table 2.7 shows the altitude requirements.

Operational State	Altitude Requirement
Operating	–60 m to +1800 m (–197 feet to +5904 feet)

Table 2.7 Altitude Requirements

Airflow

Each base station rack requires 0.6 m (2 feet) of open space in front of and behind it to allow suitable airflow for cooling. Each cooling fan draws approximately 600 cubic feet per minute (CFM) of air.

Heat Output

Table 2.9 shows the amount of heat produced by a +24V base station.

Version	Configuration	Heat Output (W)	Heat Output (BTU/hour)
MMDS	6 sectors	7065	24 107
	3 sectors	3810	13 000
	1 sectors	1725	5886
PCS	6 sectors	5565	18 989
	3 sectors	3110	10 612
	1 sectors	1475	5033
WCS	6 sectors	7005	23 902
	3 sectors	3780	12 898
	1 sectors	1715	5852

Table 2.8 Heat Output (+24V Systems)

Table 2.9 shows the amount of heat produced by a –48V base station.

Version	Configuration	Heat Output (W)	Heat Output (BTU/hour)
3.3/3.5 GHz	6 sectors	7005	23 902
	3 sectors	3780	12 898
	1 sectors	1715	5852
MMDS	6 sectors	7065	24 107
	3 sectors	3810	13 000
	1 sectors	1725	5886
WCS	6 sectors	7005	23 902
	3 sectors	3780	12 898
	1 sectors	1715	5852

Table 2.9 Heat Output (–48V Systems)

Shock and Vibration

The base station uses network equipment-building system (NEBS2000) racks designed for use in level 4 seismic zones.

Electrical Requirements

Before you begin installing the base station, read the following requirements. Ensure that each requirement is met before proceeding with the installation and consult your MOPs for procedures concerning power, grounding, and high-risk cut-over activities.

WARNING: Failure to meet the following requirements may result in personal injury and cause damage to or destruction of the base station and surrounding equipment.

+24V Base Stations

Figure 2.2 shows the power and ground cables for the base station.

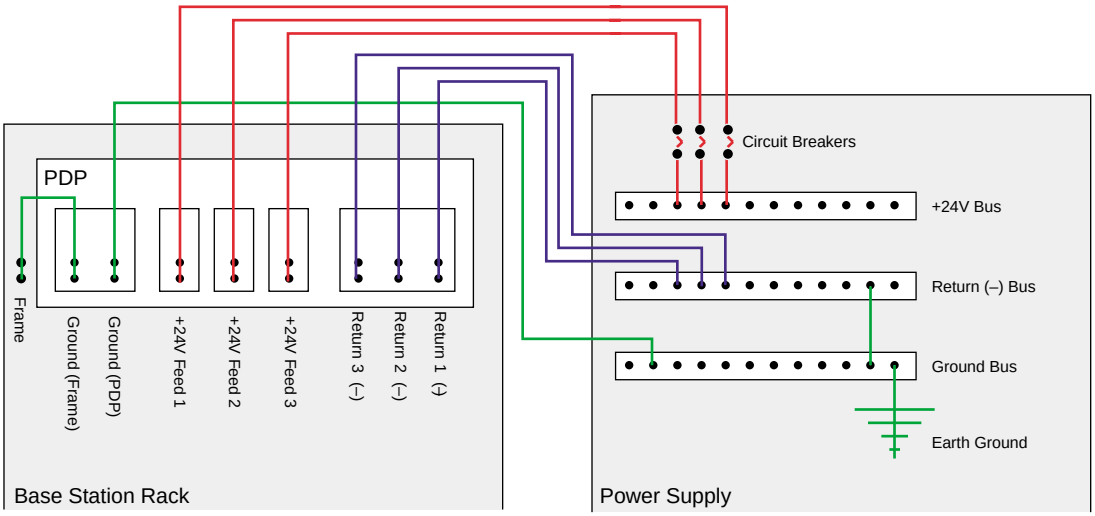

Figure 2.2 Base Station Power and Ground Cabling

Main Power

The base station requires a +24V (nominal) DC power supply. The recommended DC power source setting is +27.0V (as measured at the PDP inputs).

The minimum recommended DC input voltage at the PDP is 25.0V; the maximum recommended DC input voltage at the PDP is 28.0V. The input power noise level should not exceed a maximum of 100 mV peak-to-peak, DC to 20 MHz.

NOTE: The minimum gauge for the wires connecting the base station to the main power source is #2 AWG. The maximum loop length of #2 AWG wire is 19.8 m (65 feet). #2 AWG wire that is less than this length will not be damaged or overheat in the event of a current overload or short-circuit condition.

NOTE: A readily accessible disconnect device shall be incorporated in the building installation wiring.

Table 2.9 shows the maximum power consumption for the different configurations of the base station..

Version	Configuration	Radio Rack (A)	RF Rack (A)	Total (A)	Total (W)
MMDS	6 sectors	80	212	292	7305
	3 sectors	47	110	157	3930
	1 sectors	28	42	71	1765
PCS	6 sectors	80	152	232	5805
	3 sectors	49	80	129	3230
	1 sectors	28	32	61	1515
WCS	6 sectors	80	212	292	7305
	3 sectors	47	110	157	3930
	1 sectors	28	42	71	1765

Table 2.10 Power Consumption Values (+24V)

Main Power Bay Circuit Breaker Size

Each rack requires three +24V DC feeds. Table 2.11 shows the recommended values of the circuit breakers to protect each feed.

Rack	WCS	MMDS	PCS
Radio	70A	70A	70A
RF	100A	100A	70A

Table 2.11 Power Bay Circuit Breaker Sizes (+24V)

Main Power Source Grounding

The return lead (sometimes labeled as negative, "–") on the base station's power supply shall be connected to earth ground as close as possible to the +24V DC source (i.e. the rectifier or DC-DC converter). For fault protection, the earthing conductor shall be sized in accordance with applicable regulations to carry the full rated current of the 24V DC source. Since this is a positive-supply negative-ground system, the return lead is the one with the most negative potential of the active conductors, +24V and DC return.

Power Bay Ground and Voltage Levels

Table 2.12 shows the required electrical levels as measured at the PDP terminals.

Unit	Measurement	Specification
Voltage	+24V DC (+) to return (–)	+27.0V DC nominal (25.0V DC min, 28.0V DC max)
Power	+24V DC (+) to return (–)	10kW minimum
Voltage	Return (–) to ground	0.5V DC maximum
Resistance	Return (–) to ground	0.1Ω maximum
Voltage	+24V DC (+) to ground	+25.0V to +28.5V DC

Table 2.12 Required Ground Levels (+24V)

Base Station Circuit Breaker Current Loads

Each rack contains a power distribution panel (PDP). The PDP has up to 16 circuit breakers (CBs). Each breaker switch controls the power to a specific component. Individual components can be powered off by setting the appropriate breaker switch to the OFF (down) position.

Table 2.13 shows the maximum current loading of the circuit breakers in the RFSS and radio rack PDPs.

Circuit Breaker	RFSS Rack PDP	Radio Rack PDP
CB 01	10A	10A
CB 02	30A	30A
CB 03	30A	30A
CB 04	30A	30A
CB 05	30A	30A
CB 06	30A	30A
CB 07	30A	30A
CB 08	30A	30A
CB 09	30A	30A
CB 10	30A	30A
CB 11	30A	30A
CB 12	30A	30A
CB 13	30A	30A
CB 14	10A	10A
CB 15	—	2.5A
CB 16	—	—

Table 2.13 Circuit Breaker Current Loads (+24V)

–48V Base Stations

The customer must ensure that base station site meets the requirements specified in this section. Figure 2.3 shows the power and ground cabling.

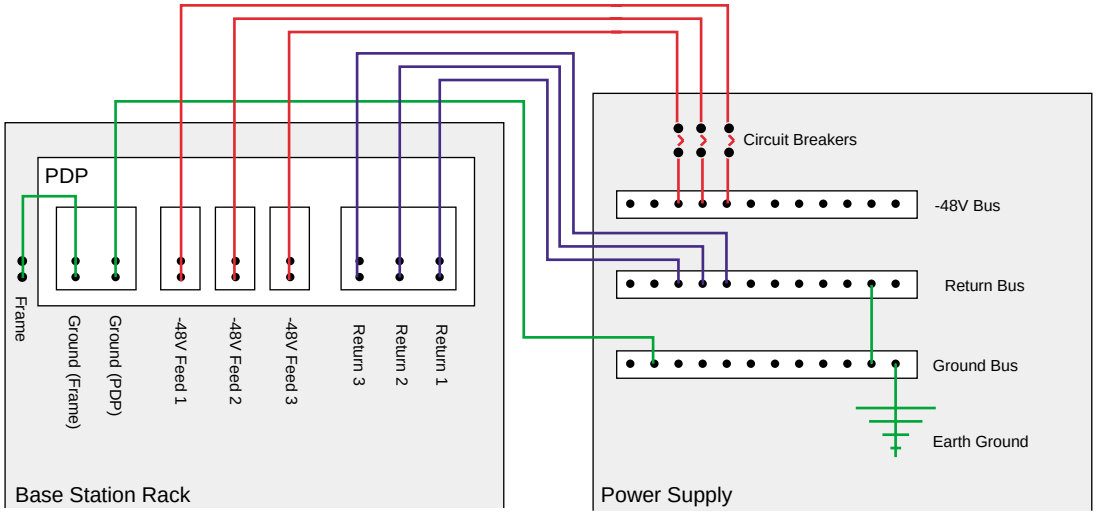

Figure 2.3 Base Station Power and Grounding Cabling

Base Station Power Supply (–48V)

The customer must provide a –48V (nominal) DC power supply capable of providing a voltage range of –50V to –56V DC with maximum ripple/noise of 100 mVp-p from DC to 20 MHz.

The recommended DC power supply setting is –54.4V (measured at the PDP inputs).

For a six-sector base station, the power supply must supply 150A.

> **NOTE:** A readily accessible disconnect device shall be incorporated in the building installation wiring.

Table 2.14 shows the maximum power consumption for the different configurations of the base station..

Version	Configuration	Radio Rack (A)	RF Rack (A)	Total (A)	Total (W)
MMDS	6 sectors	40	106	146	7305
	3 sectors	24	55	79	3930
	1 sectors	14	21	35	1765
WCS	6 sectors	40	106	146	7305
	3 sectors	24	55	79	3930
	1 sectors	14	21	35	1765
3.3 GHz	6 sectors	40	106	146	7425
	3 sectors	24	55	79	3990
	1 sectors	14	21	35	1785

Table 2.14 Power Consumption Values (–48V)

Version	Configuration	Radio Rack (A)	RF Rack (A)	Total (A)	Total (W)
3.5 GHz	6 sectors	40	106	146	7425
	3 sectors	24	55	79	3990
	1 sectors	14	21	35	1785

Table 2.14 Power Consumption Values (–48V)

Base Station Power Supply Circuit Breakers

The customer's –48V DC power supply must be equipped with six circuit breakers to power the base station rack equipment. Table 2.15 shows the required sizes of circuit breakers on each of the three power feeds to each rack.

Rack	Circuit Breaker Size
Radio rack	35A
RF rack	50A

Table 2.15 Power Bay Circuit Breaker Sizes (–48V)

Base Station Power Supply Grounding

The return lead on the base station power supply shall be connected to earth ground as close as possible to the –48V DC source (for example, the rectifier or DC–DC converter). For fault protection, the earthing conductor shall be sized in accordance with applicable regulations to carry the the current of the largest power source circuit breaker (either 35A or 50A). Since this is a negative-supply positive-ground system, the return lead is the one with the most positive potential of the active conductors, –48V and DC return.

Backup Power

The base station does not contain any internal battery backup systems. Ensure that your main power source has a backup power system in case of a power failure.

Fuses

Each RFSS module contains one 2A, 250V, fast-blowing fuse (1.25 × 0.25 inch) to protect the RF components from damage in the event of an electrical overload.

Rack Grounds

Table 2.16 shows the grounding requirements for each rack.

Ground Type	Requirement
Frame ground	Each rack requires one connection to its frame assembly for use as a frame ground. The frame ground cable uses #6 AWG wire.
Main ground	Each rack requires one connection to the main building ground, such as the master ground bar (MGB). The ground cable uses #6 AWG wire.
Isolation pad	Each rack must be installed on an isolation pad to ensure proper grounding. The isolation pads are included in the installation kit.

Table 2.16 Grounding Requirements

Compression Lug Color Codes

Table 2.17 shows the compression lug color codes for common wire gauges.

Wire Gauge (AWG)	Color Code
#6 (used for ground cables)	Blue
#4	Gray
#2 (used for main and return power cables)	Brown
#1	Green
1/0	Pink
2/0	Blank

Table 2.17 Compression Lug Color Codes

Network and Backhaul Requirements

Before you begin installing the base station, read the following network requirements. See the following documents for detailed information about network and backhaul requirements:

- *Network Deployment Planning Guide* – describes site, network, and backhaul requirements
- *System Overview* – describes the role and function of equipment in the network core

Edge Routers

The base station requires a 100-Mbit/s Ethernet connection to at least one edge router configured to direct packets between the base station and the network core. Ensure that your base station site can accommodate the electrical, environmental, and physical requires of the edge routers.

Backhaul Circuits

Multiple T1, DS3/E3, or other interfaces connect the edge routers at the base station site to the network core. See your field engineering package information about your site's backhaul circuits and the configuration of any necessary customer service units (CSUs).

NOTE: Backhaul circuits must be tested by qualified personnel before the base station is placed into operation in order to ensure connectivity with the core servers.

PSTN Gateway

The base station does not connect directly to the PSTN. A PSTN gateway located in the network core connects the IP-based equipment to the circuit-switched PSTN.

NOTE: Ensure that any equipment connecting the base station to the PSTN is UL-listed.

General Site Requirements

Each site has unique requirements and characteristics. See your field engineering package for specific requirements relating to your installation. The field deployment package contains the site's floor plan, cabling routing and termination, and other site-specific

See the *Network Deployment Planning Guide* for a comprehensive description of generic site requirements.

Restricted Access

The base station is intended for installation in restricted access locations only. Access to the site must be controlled by the authority for that location and granted through the use of special tools, locks and keys, or other means of security. Access should be limited to service personnel who have been instructed about the reasons for the access restrictions and about any precautions that must be taken while at the location.

Mounting Surface

The racks are suitable for mounting on concrete or other noncombustible surfaces only.

Equipment Entrance and Unloading Area

A route must be provided between the unloading area and the equipment room where no restrictions will be encountered with a clearance less than 0.9 m (36 inches) wide (side-to-side), and 2.0 m (80 inches) high (floor-to-obstruction).

All turns along the route must allow sufficient clearance to turn or tilt an object 0.6 m (24 inches) wide, 0.6 m (24 inches) deep, and 2.1 m (83 inches) high.

AC Outlets

The site must have at least two duplex AC receptacles located within a convenient distance to facilitate installation and maintenance of the base station.

Fire Protection System

SOMA Networks recommends a fire protection system for the site.

Lighting

The site must have sufficient lighting to conduct work in a safe manner. Emergency lighting is recommended. Lighting must meet local and other applicable regulations.

Tower Lights

Depending on its height and applicable regulations, the tower may require aviation safety lights. Consult the aviation, environmental, and communication regulations applicable to your site for information.

Antenna Mounting Locations

The base station uses two antennas (main and diversity) per sector. Ensure that your tower can support the number of antennas shown in Table 2.18.

Supported Sectors	Required Antennas
1	2
2	4
3	6
4	8
5	10
6	12

Table 2.18 Antenna Requirements

The field engineering package contains information about the size, weight, and installation requirements of the antennas.

GPS Antenna Mounting Locations

The +24V version of the base station requires two 1-inch diameter hollow pipes for mounting the two GPS antennas. The mounting location must be free of any objects that might block satellite visibility within 10° of the horizon.

Cabling Requirements

Ensure that your site has the necessary cable racks and ladders to accommodate the base station and that your site has external cable access ports for the GPS (+24V base stations only) and RF antenna cabling. The field engineering package contains the cable layout specific to your site.

Isolated Ground Plane Environment

Ensure that the base station will be installed in an isolated ground plane environment as defined in *Telcordia Technologies GR-1275-CORE*.

Master Ground Bar Requirements

The site's master ground bar (MGB) must be connected to the building principal ground's electrode system. The building principal ground is the point where grounding conductors of the building (such as air-conditioning, communication systems, and structure) are bonded together.

Ensure that the electrode system meets the requirements specified in the National Electrical Code (NEC) article 250, sections 150–170, 1999.

NOTE: See the floor plan drawing in your field engineering package for the location of the MGB.

Ground Riser Cable

The ground riser cable (the cable connecting the MGB to the building principal ground) must have a minimum conductor sizing of 2/0 AWG. If any equipment cables at the site are larger than 2/0 AWG (such as to compensate for voltage drop), the size of the ground riser cable must be adjusted. The ground riser cable must use an equal or larger gauge than the largest conductor. The ground riser cable must be labelled with a tag conforming to *GR-1275-CORE*.

In order for the ground riser cable to be nonrestrictive to lightning, the following guidelines should be observed:

- The cable should be run using the most direct route possible. The number and severity of turns and bends should be minimized. Bends must not exceed 90°.
- The cable must not be looped or coiled.
- The cable must not be supported by metal clamps.
- If a conduit is required to protect the cable, the conduit should be made of PVC. If a metal conduit is used, the conduit must be bonded to the ground riser cable on both ends.
- The cable must not run through or enter any metal boxes unless the boxes are bonded to the ground riser cable at the entry and exit point.

Ground Resistance

The resistance of the building principal ground should be as low as practically possible (typically less than 5Ω). Under no circumstances should the resistance exceed the local electrical utility limits of 25Ω (NEC article 250-56, 1999).

Ground Cable Fastening Techniques

Figure 2.4 shows the correct methods for fastening the base station's main grounds (one per rack) to a master ground bar (MGB) (or other suitable grounding point).

If both main grounds from the base station racks are to be fastened to a single ground stud, the grounds should be attached using the correct method shown in Figure 2.4. By using this method, the ground from one rack can be removed without disturbing the ground for the other rack.

Correct Fastening for Single Ground

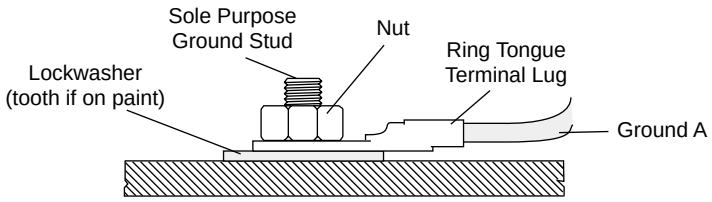

Correct Fastening for Two Grounds

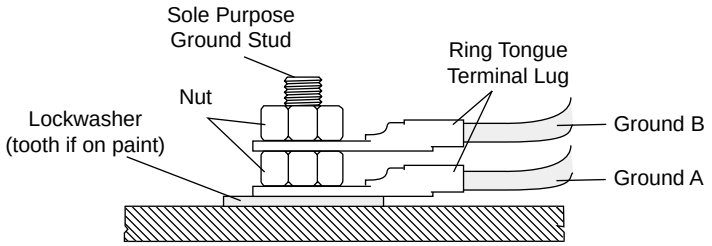

Incorrect Fastening for Two Grounds

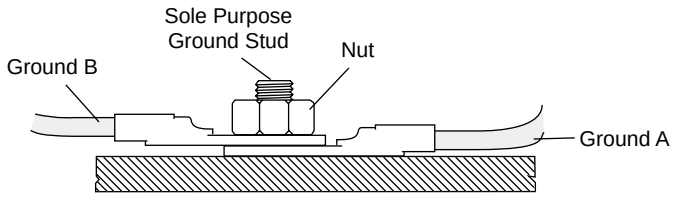

Figure 2.4 Correct Ground Fastening Technique

Chapter 3

PRE-INSTALLATION PROCEDURES

This chapter lists the tools and equipment required for installing and testing the base station. It also provides procedures for unpacking the racks and configuring individual cards and shelves.

Contents

Preparing for Installation 36
- Antistatic Precautions 37
- Equipment, Tools, and Supplies Checklists 38
- Unpack the Equipment 40
- Review Site Deliverables List 41

Configuring Cards 42
- CPC4400 Ethernet Switch 43
- Concurrent 310 Processor Card 45

PREPARING FOR INSTALLATION

This section describes precautions, equipment, and tasks that should be reviewed or performed prior to beginning the installation.

Topics and Procedures	Page
Antistatic Precautions	37
Equipment, Tools, and Supplies Checklists	38
Unpack the Equipment	40
Review Site Deliverables List	41

Antistatic Precautions

WARNING: Components in the base station are highly sensitive to electrostatic discharges (ESD). Follow the procedures described below to prevent unseen damage from occurring.

To prevent damage to components from static electricity:

- Do not handle circuit boards unless you are using the appropriate antistatic protection, such as wrist straps, boot straps, boots, or a conductive mat. Wrist straps must have snug but comfortable contact with your skin, and they must be connected to a grounding point on the racks.
- Handle circuit boards by the faceplate, handles, or edges. Do not touch any integrated circuits, connections, pins, or soldered surfaces.

Wrist-Strap Grounding Point

Each rack contains a wrist-strap grounding point in the bottom-left corner of the power distribution panel (PDP). The grounding point is connected to the frame ground and provides antistatic protection when technicians work with circuit cards.

NOTE: The racks must be grounded for the wrist-strap grounding point to be effective.

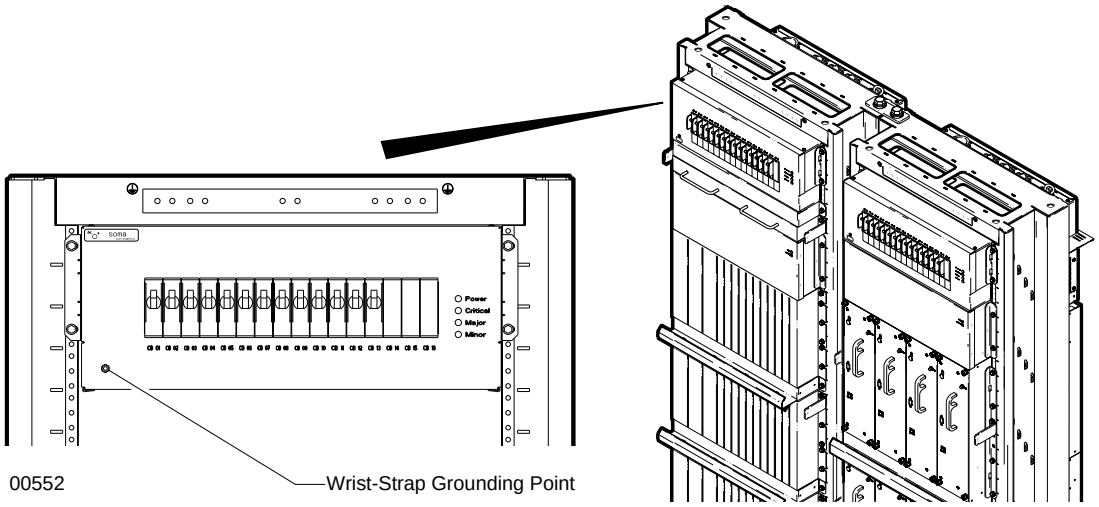

Figure 3.1 Wrist-Strap Grounding Point

Equipment, Tools, and Supplies Checklists

Tools

The following tools are recommended for a typical base station installation:

- Allen key set
- Bolt cutter
- Cable ties
- Chalk line
- Drill bits (metal and masonry)
- Electrical tape
- Extension cord
- Flat file
- Framing square
- Hacksaw (with blades)
- Hammer drill
- Heat gun (with heat shrink roll)
- Label maker
- Marking pencil
- Oxide-inhibiting compound
- Platform stepladder (6-foot)
- Plumb bob
- Portable bandsaw kit
- Scissors
- Scratch awl
- Shims (for leveling racks)
- Socket sets (Imperial and metric)
- Strap (with buckle)
- Tape measures (linen and metal)
- Thomas and Betts (T&B) crimper
- Torpedo level
- Torque wrenches
- Utility knife
- Wrench sets (Imperial and metric)
- Vacuum cleaner with high-efficiency particulate air (HEPA) filter

NOTE: Ensure that your torque wrenches are correctly calibrated according to the methods and schedule specified by the manufacturer. The calibration date should be indicated on each wrench.

Safety Equipment

The following safety equipment is recommended for a typical base station installation.

- Ear plugs
- Electrical gloves
- ESD straps
- First aid kit
- Flashlight
- Portable eye-wash station
- Safety glasses
- Safety shoes

Test Equipment

Table 3.1 shows the equipment recommended for testing base station functionality.

Equipment	Purpose
Digital multimeter	Checking continuity and electrical characteristics
Sunset OCx	Testing SONET and T-carrier networks
Workstation, terminal, or laptop	Installing, configuring, and verifying software
Cable sweep generator	Testing the electrical integrity of antenna and RF cables
Spectrum analyzer	Monitoring RF signal output
Ethernet cable tester	Testing the type and integrity of Ethernet cables
Oscilloscope	Checking input power noise levels

Table 3.1 Recommended Test Equipment

NOTE: Ensure that your test equipment is correctly calibrated according to the methods and schedule specified by the manufacturer. The calibration date should be indicated on each piece of test equipment.

Software

Table 3.2 shows the software recommended to be installed on your laptop or workstation.

Software	Purpose
TCP/IP drivers	Accessing the individual systems over TCP/IP
SSH, SCP	Creating secure shell (SSH) sessions with the cards in the base station. For UNIX-like operating systems, you can type `ssh` at the command line. For Windows operating systems, use putty.exe or another SSH client. Secure copy (SCP) is required for transferring files securely across the network.
Telnet, FTP	Establishing sessions and transferring files with devices in the network
Serial terminal	Communicating with utility bus controllers, radio sector controllers, and the GPS clock module
Text editor	Viewing and editing text and configuration files. Must support UNIX-style text files.
Web browser	Displaying the configuration management (CM) tool and other Web-based tools

Table 3.2 Recommended Software

Unpack the Equipment

The racks are delivered on shipping pallets. Each rack is secured in an upright position and is bolted to the pallet. Additional equipment is delivered in separate shipping boxes.

To unpack the base station equipment

1. Transport the shipping boxes to the installation area using a dolly or pallet jack.
2. Inspect the exterior packaging for any noticeable damage that may have occurred during shipment.
3. Verify that the shipment is complete by checking the contents of each box against the bill of materials (BOM) or shipping invoice that arrives with each box. The BOM for each box may be located on the outside or inside of the box.
4. Report any missing or damaged components to the field support coordinator as soon as possible.
5. Cut the packaging tape on each box using scissors or a utility knife.
6. Remove the cardboard packaging from the racks:
   - **i** Remove the top of the cardboard packaging.
   - **ii** Remove the cardboard sides. The cardboard sides are bolted to the shipping pallet and pull off with minimal effort.
7. Remove the protective bags covering the racks.
8. Check the racks for extra mounting hardware or invoices. If there are additional items, remove them and keep them for future use.
9. Remove the four 9/16-inch bolts that secure the base of each rack to its shipping pallet.
10. Verify the contents of the other boxes by examining their BOMs.

    NOTE: Do not remove any items from their antistatic bags until you are ready to install them.

11. Save the packaging material and the BOMs in case any of the equipment needs to be returned or moved in the future.

Review Site Deliverables List

Table 3.3 shows the paperwork that ships with each base station.

Document	Description
Anchor kit	Lists installation kit contents
BOM	Lists every component in the base station
Shelf inspection checklist	Factory inspection of each utility and radio shelf

Table 3.3 Inventory Checklists

To check the inventory

1. Perform an inventory check using the site deliverables list provided with the E1 package and BOMs.
2. Ensure that all equipment and accessories have been shipped.
3. Document any shortages and report them to the field support coordinator so that any missing equipment may be procured and delivered to the site as soon as possible.
4. Ensure that the serial number for each piece of equipment is recorded in the base station's on-site documentation.

CONFIGURING CARDS

The base station can use a variety of third-party, off-the-shelf processor and Ethernet cards. The jumpers and switches on the cards may require configurations which differ from the factory defaults. This section provides the procedures for making the necessary alterations.

NOTE: Consult your field engineering package for information about the type, number, and configuration of cards used in your base station.

This section describes how to configure the following cards for use in the base station.

Procedure	Page
CPC4400 Ethernet Switch	43
Concurrent 310 Processor Card	45

CPC4400 Ethernet Switch

The CPC4400 is used for the base station's Ethernet switches. It may be necessary to modify the jumpers, as the base station uses a configuration of the Ethernet switches that differs from the manufacturer's original settings.

NOTE: If the Ethernet switches are pre-installed in the shelves, then they have already been configured and this procedure is not required.

Table 3.4 shows the correct settings of the Ethernet switch jumpers.

Jumper	Setting	Appearance	Description
K1	OFF		PCI reset. Removing this jumper causes the card NOT to be reset when the utility bus controller is reset. This jumper must be left OFF.
K2–K4	ON		User-defined. These jumpers must be left ON.
K5, K6	OFF		Burn-in mode (K5) and break detect (K6). These jumpers must be left OFF.
K7	ON (pins 1–2)		CPCI BDSEL. This jumper configures the card for use in a hot-swap shelf. This jumper must be left ON on pins 1 and 2. Pin 3 should be left open.

Table 3.4 CPC4400 Jumper Settings

To configure the Ethernet switches

1. Remove the two Ethernet switches from their antistatic packaging at a grounded work area. Ensure that you are properly grounded with a wrist or boot strap before handling the cards.
2. Ensure that jumpers K1 to K7 are configured as shown in Table 3.4. Figure 3.2 shows the location of the jumpers.

NOTE: For jumpers in the OFF position, hang the jumper off the header pins as shown in Table 3.4. This ensures that the jumper is still present if future changes to the cards are required.

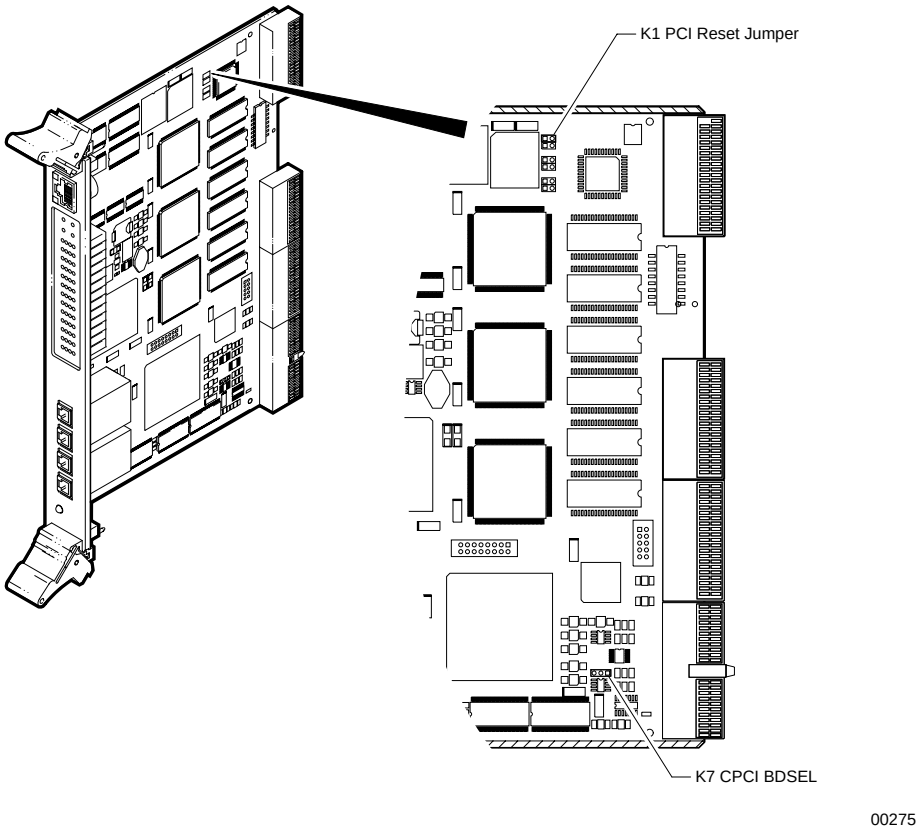

Figure 3.2 CPC4400 Jumper Configuration

3 Place the cards back in their antistatic packaging until you are ready to install them in the shelves.

Concurrent 310 Processor Card

The Concurrent 310 is used for both the radio sector controllers and utility bus controllers. It may be necessary to modify the BIOS and jumper settings, as the base station uses a configuration of these cards that differs from the manufacturer's original settings.

NOTE: If the cards are pre-installed in the shelves, then they have already been configured and this procedure is not required.

BIOS Settings

Table 3.5 shows the required BIOS settings for the cards (utility bus controllers and radio sector controllers). The BIOS settings can be viewed or changed via a serial terminal. See the *Macro Base Station Maintenance Procedures* for information.

Option	Setting
Main → Boot Options → Option ROM Loading	Load SCSI Once
Main → Boot Options → Serial Console Baud Rate	115.2K
Main → ROM Disk (A:)	ROM Disk
Advanced → Ethernet 0 Connector	Backplane
Boot	Hard Drive, Diskette Drive, Removable Devices, CD-ROM Drive

Table 3.5 Concurrent 310 BIOS Settings

Jumper Settings

Table 3.6 shows the required settings of the configuration switches that differ from the factory defaults.

Card	Switch	Appearance	Description
Utility bus controller or radio sector controller	Serial console mode		Directs the console to the serial port

Table 3.6 Concurrent 310 Switch Settings

To configure the Concurrent 310 cards

1. Remove cards from their antistatic packaging at a grounded work area. Ensure that you are properly grounded with a wrist or boot strap before handling the cards. Depending on the configuration of your base station, you may have up to eight cards that need to be configured.
2. Ensure that the card's BIOS settings are correct.
3. Ensure that the jumper switches are configured as shown in Table 3.6. Figure 3.3 shows the location of the jumpers.

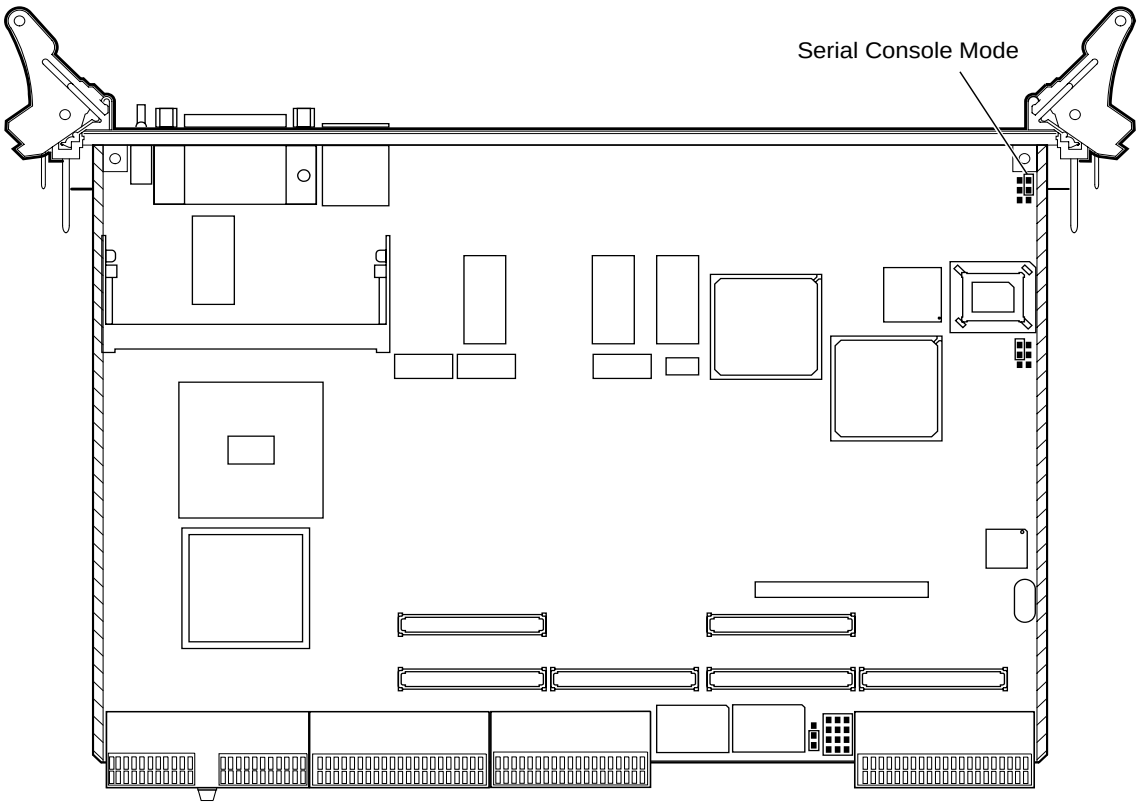

Figure 3.3 Concurrent 310 Switch Configuration

4. Place the cards back in their antistatic packaging until you are ready to install them in the shelves.

Chapter 4

BASE STATION INSTALLATION PROCEDURES

This chapter provides procedures for installing the racks and their internal components. Before proceeding with this chapter, you must complete all the tasks described in Chapter 3.

Contents

Installing the Racks 48
- Prepare the Location 49
- Position the Racks 50
- Secure the Racks 51

Attaching Ground and Power Cables 53
- Check PDP Sector Configuration 54
- Ground the Racks 55
- Attach the Main and Return Power Cables 57

Attaching the Shelves and Modules 59
- Radio Rack Layout 60
- RF Rack Layout 61
- Attach the Radio Shelves to the Radio Rack 62
- Cover Empty Radio Bays 63
- Attach the Utility Shelf to the Radio Rack 64
- Install the GPS Clock Module 65
- Install the RFSS Modules 66
- Cover Empty RFSS Slots 67

Populating the Shelves 68
- Shelf Layout 69
- Insert CompactPCI Power Supplies 73
- Test CompactPCI Power Supplies 74
- Insert the Radio and Utility Shelf Cards 75
- Cover Unused Card Slots 77

Connecting the Cables 78
- Connect the PDP Power Cables 79
- Connect the RFSS Signal Cables 83
- Connect the Alarm Cables 85
- Connect the Ethernet Cables 86
- Connect the Clock Cables 87
- Connect the RF Cables 88
- Connect Ferrite Blocks 90

INSTALLING THE RACKS

These procedures describe how to prepare the floor for rack installation, move the racks into place, and secure the racks to each other, to the floor, and to the ceiling.

Procedure	Page
Prepare the Location	49
Position the Racks	50
Secure the Racks	51

NOTE: When you install the racks, finish positioning and leveling the first rack before proceeding to the second rack. This makes leveling the racks easier and minimizes the potential for errors that may occur during rack placement.

The racks are suitable for mounting on concrete or other non-combustible surfaces only.

Prepare the Location

This procedure applies to installing the base station on a concrete floor and securing the racks using 4-inch concrete expansion bolts (called anchor bolts in this document). These anchor bolts are designed for sites in level 4 seismic zones and may not be suitable for your site. See your field engineering package for rack installation procedures specific to your site.

To prepare the location

1. Mark with a chalk line the location where you will install the racks. Refer to your field engineering package for the required location. If there are overhead requirements, use a plumb line to align the rack vertically.

   Placed together, the racks have a footprint of 1.2 m by 0.6 m (47 1/4 inches by 23 5/8 inches). The racks are 2.11 m (83 inches) in height.

2. Verify that there is adequate space for the racks:

   i. Move both racks to the intended installation location.

   ii. Ensure that you have room for both racks, their cabling, and enough space for airflow and the insertion and removal of components.

   See page 22 for airflow requirements.

   iii. Remove the racks.

3. Place the isolation pad in the precise location designated for the first rack using the chalk line as your guide.

   The base of each rack hangs over the edge of its isolation pad by 1 mm (1/32 inch).

4. Trace the anchor hole locations on the concrete floor using the cutouts on the isolation pad as your guide. Use the four outer locations and trace the entire shape of the anchor holes.

5. Remove the isolation pad.

6. Punch the concrete in the outer edge of each anchor guide using the concrete punch. This will make drilling the anchor holes easier.

7. Drill an anchor hole 101 mm (4 inches) deep on the outer edge of each anchor hole using a hammer drill with an 3/4-inch carbide-tipped masonry bit.

8. If the drill bit hits a metal reinforcement bar, move the hole location to the inner edge of the anchor guide and repeat steps 6 and 7.

9. Ensure that the holes are 101 mm (4 inches) deep; otherwise, the anchor bolts will not sit properly.

10. Clean each anchor hole thoroughly using a vacuum cleaner with a narrow nozzle attachment that can reach into the hole and remove the debris.

11. Cover the anchor holes with tape to prevent debris from entering them.

12. Repeat steps 3 to 11 for the second rack.

Position the Racks

This procedure describes how to position and level the racks.

To position the racks

1. Install two eyelet bolts in the top of each rack if you intend to use a crane to move the racks.
2. If you are using anchor bolts, remove the tape from the anchor holes.
3. Place the isolation pad back in the precise location designated for the rack using the chalk line and optional drilled holes as your guide.
4. Position the rack directly over the isolation pad. Take care not to move the isolation pad. When viewed from the front, the radio rack must be installed to the left of the RF rack.

   Figure 4.1 shows the correct positions of the racks.

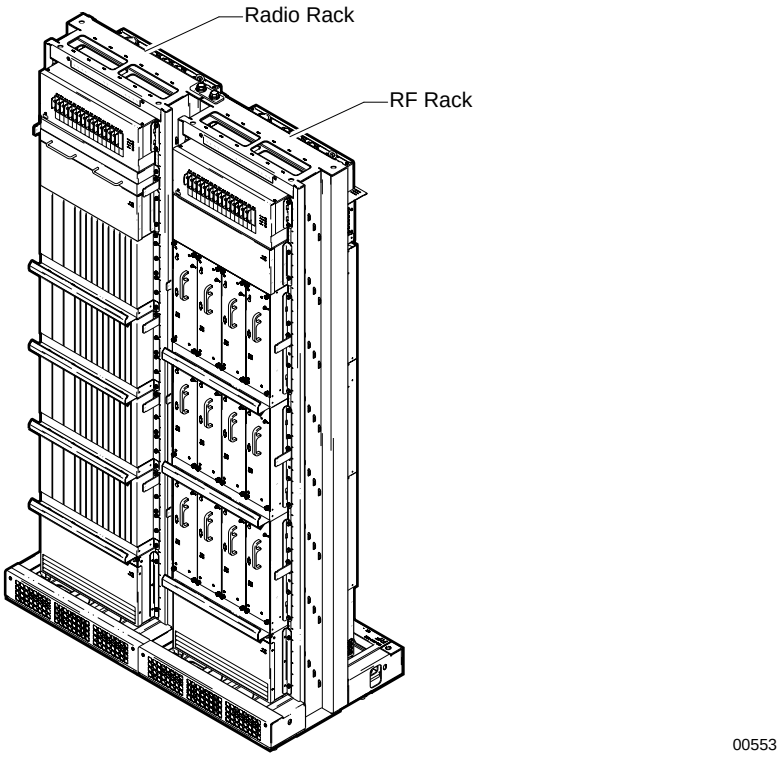

Figure 4.1 Rack Positions

5. Ensure that the rack is vertically aligned, side-to-side and front-to-rear within 0.25 cm (0.1 inches), using a torpedo level. Add shims as needed until the rack is level.
6. Repeat steps 3 to 5 for the second rack.

Secure the Racks

This procedure describes how to secure the radio and RF racks in place. The racks may be secured to the ground, to the ceiling, and to each other.

Figure 4.2 shows the location of the junction bar and the support bolt holes.

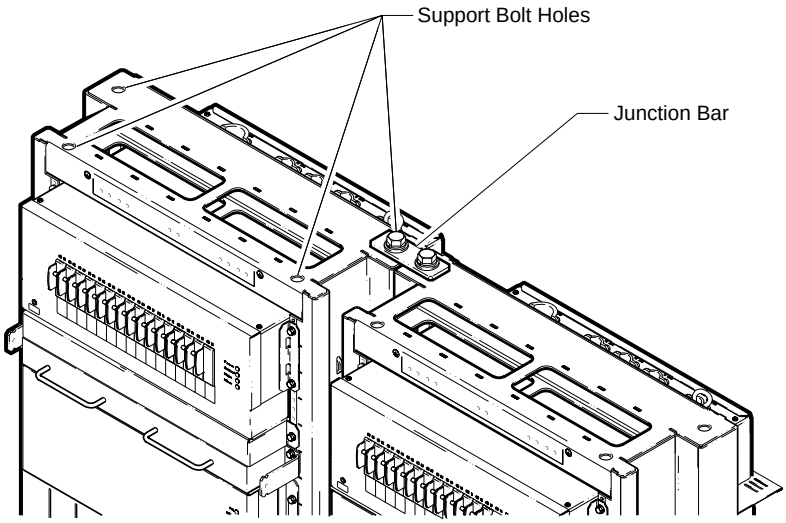

00554

Figure 4.2 Junction Bar and Support Bolt Hole Locations

To secure the racks

1. Ensure that the racks are correctly positioned and vertically aligned.
2. Connect the racks together using the junction bar and two 15/16-inch bolts. If you have trouble inserting the bolts, ensure that the racks are level and located immediately adjacent to each other.
3. If you are securing the racks to the ceiling, consult your MOPs for instructions. Each rack contains four 5/8-inch bolt holes, one on each corner at the top of the rack. These bolt holes may be used to secure the top of the rack.
4. Secure the racks to the floor. If you are using anchor bolts, complete the following steps:
   - **i** Remove any cables attached to the back of the lower cooling unit.
   - **ii** Unscrew the 5/16-inch screws holding the lower cooling unit to the rack.
   - **iii** Slide out the lower cooling unit.
   - **iv** Remove the front grill.

     The front grill is attached to the frame using two half-turn screws. The screws are vertical when open and horizontal when locked.
   - **v** Ensure that the parts in the anchor bolt assemblies are not loose.
   - **vi** Ensure that the anchor bolt, spacer sleeve, expansion sleeve, and expansion cone do not have any slack. If any of these parts are loose, tighten the parts by hand to remove any slack. Do not start spreading the expansion sleeve.
   - **vii** Place a hold-down plate over the holes in the base of each rack.
   - **viii** Loosely insert the anchor bolts through the hold-down plates into the base of the rack and the anchor holes. If necessary, tap the top of each anchor bolt to ensure it is fully seated.

ix Tighten the four anchor bolts in the base of each rack by turning the 3/4-inch washer nut while holding the 1/4-inch anchor bolt in place. The expansion sleeve is forced open, which secures the rack to the floor.

x Reattach the lower cooling units to each frame using the 5/16-inch screws. Torque the screws to 50 inch-pounds.

xi Reattach the front grill to each frame using the grill's two half-turn screws. The screws are vertical when open and horizontal when locked.

ATTACHING GROUND AND POWER CABLES

These procedures describe how to ground and power the base station.

Procedure	Page
Check PDP Sector Configuration	54
Ground the Racks	55
Attach the Main and Return Power Cables	57

WARNING: Ensure that all of the circuit breakers on each power distribution panel (PDP) are in the OFF (down) position before attaching any cables. Failure to do so may result in personal injury and cause damage to or destruction of the base station.

Access to the ground and power terminals is prevented by the rear cover of the PDP. The rear cover should always be attached to the PDP during base station operation. This prevents foreign objects from accidently coming into contact with the live wires and causing a short.

Check PDP Sector Configuration

The PDP sector configuration switch, located inside the PDP, configures the circuit breakers to support a specific number of radio sectors (1–6). In a base station supporting fewer than six sectors, some of the circuit breakers are not used and are therefore left in the OFF (down) position. The OAMP software uses the switch to determine if a circuit breaker has tripped or is not used.

The switch is set at the factory and does not normally need to be adjusted.

To check the PDP sector configuration

1. Consult your field engineering package to determine the number of sectors your base station is intended to support.
2. If necessary, remove the PDP rear cover. The rear cover attaches to the PDP using four #1 Phillips screws.
3. Ensure that the PDP sector switch is set to the number of sectors that your base station is intended to support.

   If the switch is not set correctly, set the switch to the correct value:

   i. Turn screw counter-clockwise as far as possible to find sector 1 position.

   ii. Turn screw clockwise so that slot points to correct number of sectors.

   Figure 4.3 shows the location of the PDP sector switch.

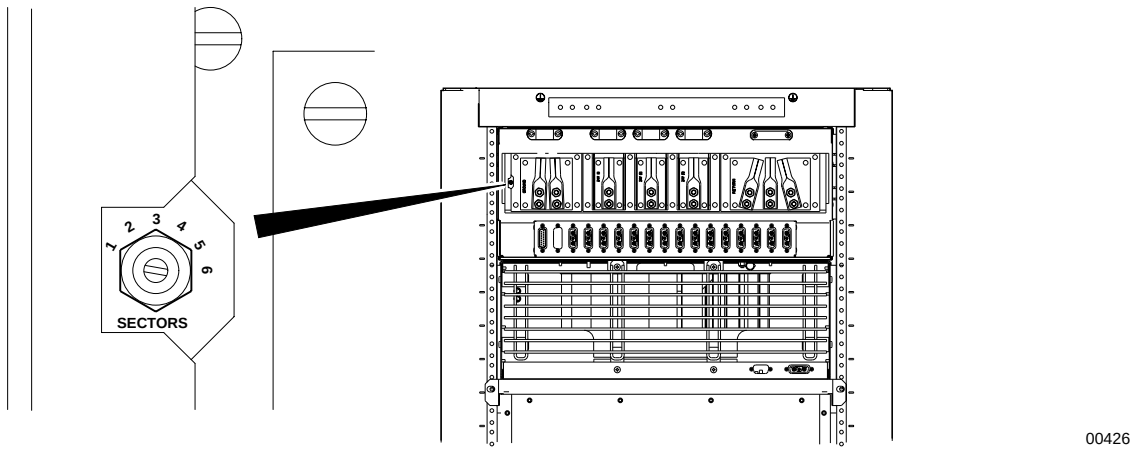

Figure 4.3 PDP Sector Switch

Ground the Racks

Each rack requires a ground cable connecting the PDP to the building's grounding system. A frame ground cable connects the rack's frame to the PDP, ensuring that the frame and its attached components are grounded.

Figure 4.4 shows the cables used to ground the racks. For clarity, the PDP rear cover is not depicted.

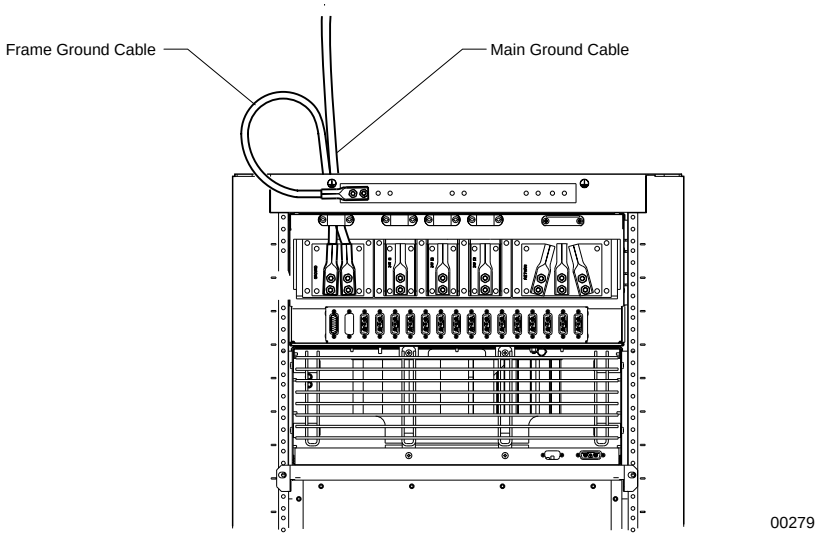

Figure 4.4 Ground Cables

To ground the racks

1. If necessary, remove the PDP rear cover. The rear cover attaches to the PDP using four #1 Phillips screws.
2. Ensure that all the circuit breakers on the PDP are in the OFF (down) position.
3. Connect the main ground cable to the building's grounding system using a minimum of #6 AWG stranded copper wire.
4. Terminate the main ground cable with a two-hole compression lug. Apply an anti-oxidant solution to the cable before attaching the compression lug.

> **NOTE:** When crimping the compression lug, ensure that you are using the appropriate tool. Compression lugs for #6 AWG wire are colored blue and require that a blue die be used with the crimping tool.

Figure 4.5 shows the dimensions of the compression lugs.

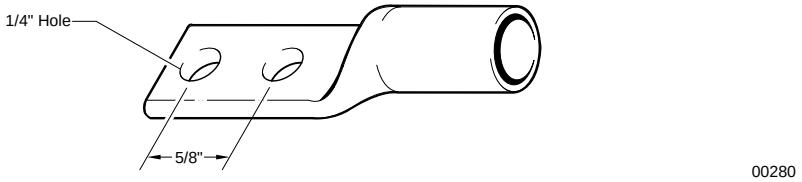

Figure 4.5 Compression Lug Dimensions

5. Apply an anti-oxidant solution to the ground terminals on the PDP.

6 Connect the compression lug on the main ground cable to one of the two ground terminals, as shown in Figure 4.6. Use a 1/4-inch hex nut with a 1/4-inch split-lock washer when securing the cable. Torque each 1/4-inch hex nut to 78 inch-pounds.

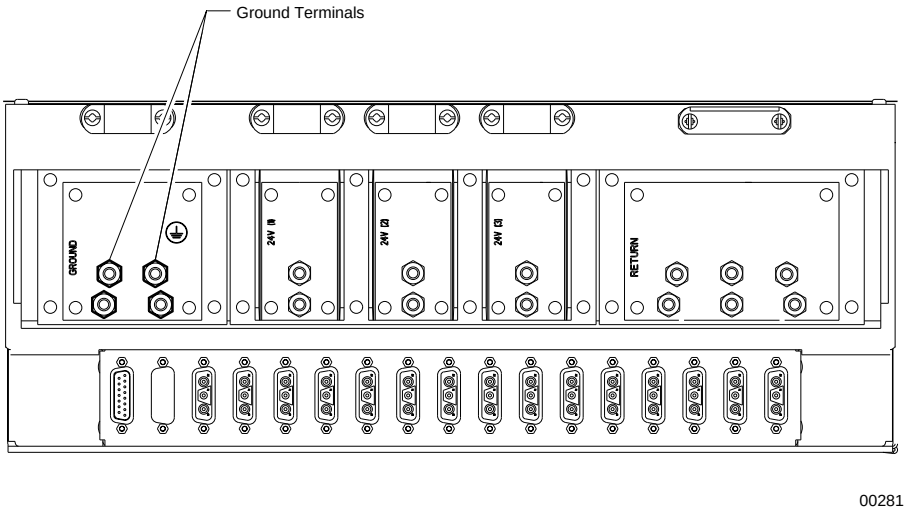

Figure 4.6 Ground Terminals on the PDP

7 Connect the frame ground cable to the second ground terminal on the PDP using a minimum of #6 AWG stranded copper wire.

8 Connect the other end of the frame ground cable directly to the top-left corner (when viewed from behind) of the rack:

- **i** Punch a hole in the grounding tape for each compression lug screw location.
- **ii** Attach the compression lug using two 5/16-inch hex screws with locking and external tooth washers.

9 Repeat steps 1 to 8 for the second rack.

10 Dress and label the ground cables according to the standards and requirements of your site.

Attach the Main and Return Power Cables

Refer to the MOPs before scheduling or beginning any work involving the site's main power. Before proceeding with this procedure, ensure that all the necessary site cable layout, runaway, and grid work has been completed.

WARNING: Ensure that the necessary requirements and procedures have been reviewed prior to the start of any power-related activity. Refer to your power cut-over MOP for procedures specific to your site.

Ensure that the main DC power supply and the base station are powered off before you begin this procedure. Failure to turn off the power supply may result in personal injury or death and cause damage to or destruction of the base station and surrounding equipment.

To attach the main and return power cables

1. If necessary, remove the PDP rear cover. The rear cover attaches to the PDP using four #1 Phillips screws.
2. Ensure that all the circuit breakers on the PDP are in the OFF (down) position.
3. Ensure that the main DC power supply is powered off.
4. Connect each of the three main power cables to the positive terminals of your DC power supply using a minimum of #2 AWG stranded copper wire.
5. Connect each of the three return power cables to the negative terminals on your DC power supply using a minimum of #2 AWG stranded copper wire.
6. Terminate each of the cables with a two-hole compression lug with the dimensions shown in Figure 4.5 on page 55. Apply an anti-oxidant solution to each cable before attaching the compression lug.

   NOTE: When crimping the compression lug, ensure that you are using the appropriate tool. Compression lugs for #2 AWG wire are colored brown and require that a brown die be used with the crimping tool.

7. Apply an anti-oxidant solution to the main and return terminals on the PDP.
8. Connect the compression lugs on the return power cables to the three return terminals shown in Figure 4.7. Use 1/4-inch hex nuts with 1/4-inch split-lock washers when securing the cables. Torque each hex nut to 78 inch-pounds.
9. Connect the compression lugs on the main power cables to the three DC power terminals shown in Figure 4.7. Use 1/4-inch hex nuts with 1/4-inch split-lock washers when securing the cables. Torque each hex nut to 78 inch-pounds.

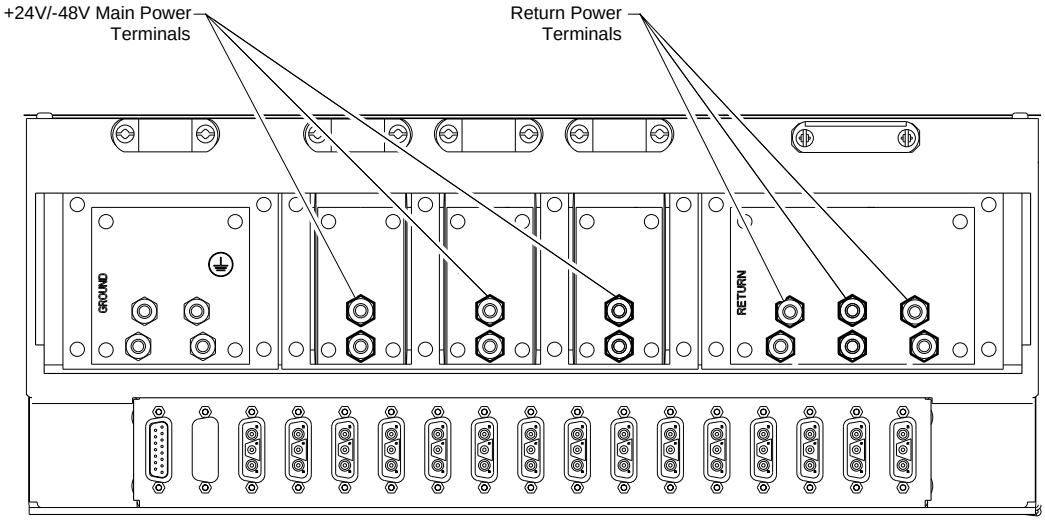

Figure 4.7 Main and Return Power Terminals

10 Ensure the main and return power cables are connected to the main power supply correctly by performing a continuity test on each cable.

11 Dress and label the main and return power cables according to the standards and requirements of your site.

> **NOTE:** Ensure that the main and return power cables are tied in a manner that minimizes the potential for creating electromagnetic fields. When tied together, the main and return power cables should be arranged in an alternating order.

12 Repeat steps 1 to 9 for the second rack.

13 Reattach the rear cover to each rack's PDP using four #2 Phillips screws. Torque each screw to 12 inch-pounds.

ATTACHING THE SHELVES AND MODULES

These procedures describe how to attach the shelves and modules to the racks.

Procedure	Page
Attach the Radio Shelves to the Radio Rack	62
Cover Empty Radio Bays	63
Attach the Utility Shelf to the Radio Rack	64
Install the GPS Clock Module	65
Install the RFSS Modules	66
Cover Empty RFSS Slots	67

Radio Rack Layout

The utility and radio shelves and the GPS clock module slide into their respective bays and bolt directly to the rack using 5/16-inch screws. The recommended torque value for each 5/16-inch screw is 50 inch-pounds.

Figure 4.8 shows the layout of the radio rack.

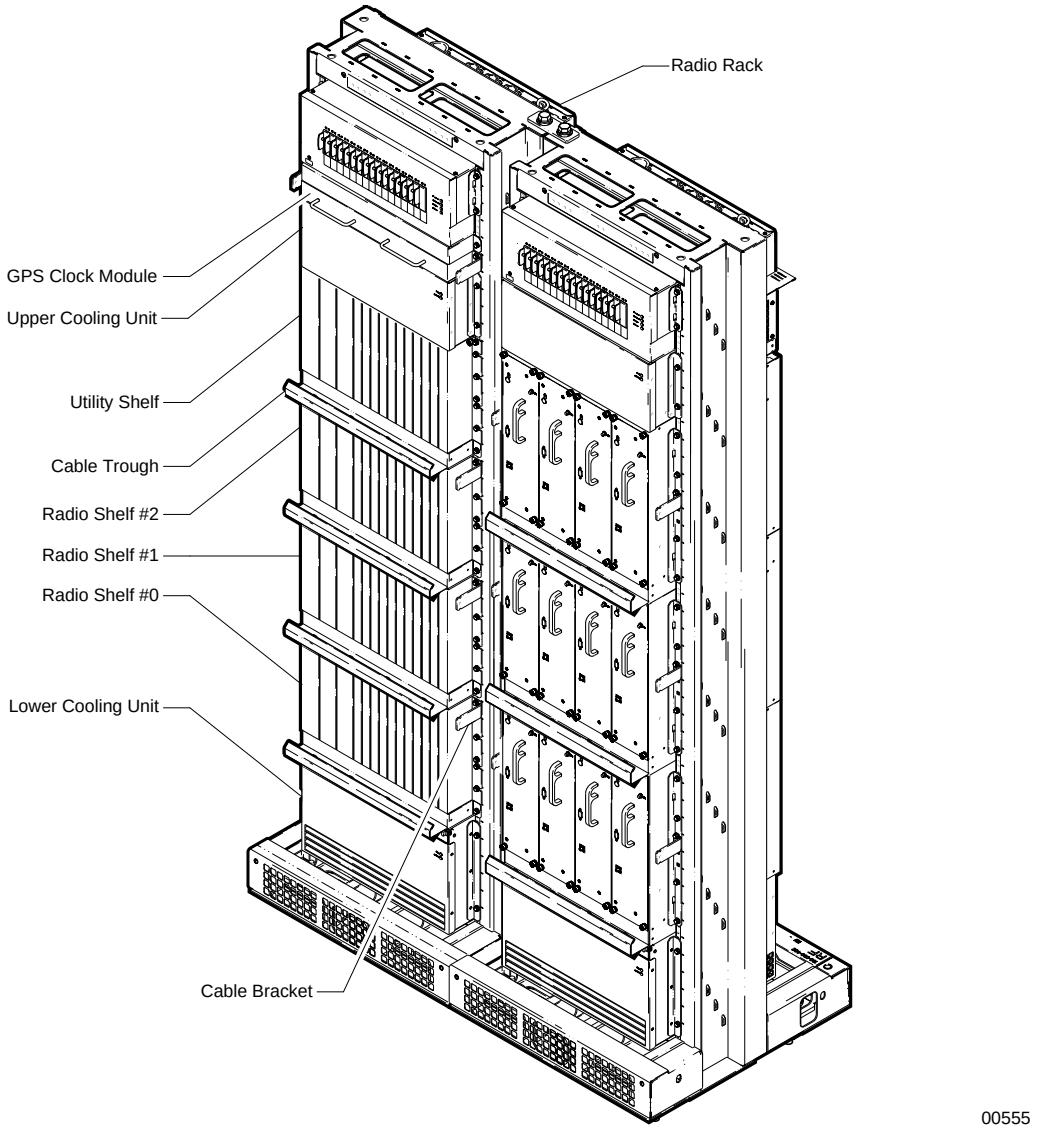

Figure 4.8 Radio Rack Layout

RF Rack Layout

The RFSS modules slide into their respective slots and bolt to each RF shelf using #2 Phillips thumb screws. In base stations that have less than 12 RFSS modules, the empty slots are covered with filler panels.

Figure 4.9 shows the location of the RFSS modules and filler panels in a base station that supports three sectors.

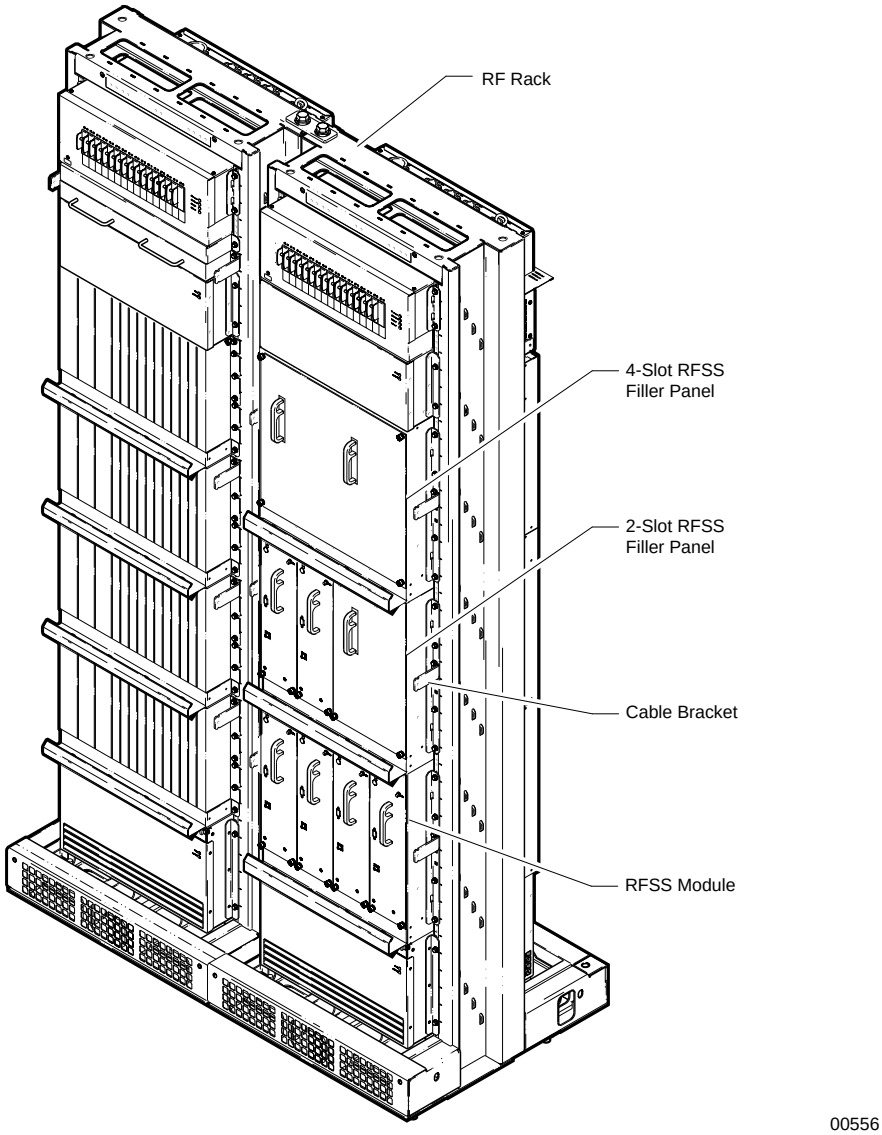

Figure 4.9 RF Rack Layout

Attach the Radio Shelves to the Radio Rack

Depending on the configuration of your base station, there may be one, two, or three radio shelves that need to be installed. The radio shelves are installed in the bottom three bays in the radio rack. If your base station uses fewer than three radio shelves, you need to add filler shelves to the empty bays to ensure the required airflow to the occupied bays.

WARNING: Your base station may arrive with the utility and radio shelves already populated with cards. If this is the case, ensure that you are properly grounded before handling the shelves. Failure to do so may damage the cards.

To attach the radio shelves to the radio rack

1. Remove the radio shelf from its protective bag.

   NOTE: Each shelf weighs approximately 6.3 kg (14 pounds) before it is filled with cards.

   You can distinguish the radio shelves from the utility shelf by reading the manufacturer's label on the shelf.

2. Slide the radio shelf into the lowest available radio shelf bay in the radio rack.

   If the bay is too tight to accommodate the radio shelf, loosen the 5/16-inch screws that hold the cable troughs to the rack. This should provide enough space for you to slide in the radio shelf.

   If any of the cable brackets interfere with the insertion of the radio shelf, remove them. The cable brackets attach to the rack using 5/16-inch screws.

3. Puncture a hole in the grounding tape for each radio shelf screw location.
4. Secure the radio shelf to the rack using eight 5/16-inch screws. Torque each screw to 50 inch-pounds.
5. Reattach any cable brackets you removed.
6. Retighten the 5/16-inch screws on any loosened cable troughs.
7. Repeat steps 1 to 6 for the remaining radio shelves.

Cover Empty Radio Bays

Depending on the configuration of your base station, there may be empty bays on the radio rack. Your base station may arrive with the unused radio bays already occupied with filler shelves. If this is not the case or if the configuration of your base station has changed, you need to add filler shelves to any empty bays to ensure the required airflow to the occupied bays.

To cover the empty radio bays

1. Slide the filler shelf into the lowest empty radio shelf bay in the radio rack. If the bay is too tight to accommodate the filler shelf, loosen the 5/16-inch screws that hold the cable troughs to the rack. This should provide enough space for you to slide in the filler shelf.
2. Puncture a hole in the grounding tape for each filler shelf screw location.
3. Secure the filler shelf to the rack using eight 5/16-inch screws. Torque each screw to 50 inch-pounds.
4. Retighten the 5/16-inch screws on any loosened cable troughs.
5. Repeat steps 1 to 4 for any remaining empty bays in the radio rack.