Attach the Utility Shelf to the Radio Rack

The utility shelf is installed in the top-most bay in the radio rack.

To attach the utility shelf to the radio rack

1. Remove the utility shelf from its protective bag. You can distinguish the utility shelf from the radio shelves by reading the manufacturer's label on the inside of the shelf.
2. Slide the utility shelf into the top bay in the radio rack.

   If the bay is too tight to accommodate the utility shelf, loosen the 5/16-inch screws that hold the upper cooling unit and the cable trough to the rack. This should provide enough space for you to slide in the utility shelf.

   If any of the cable brackets interfere with the insertion of the radio shelf, remove them. The cable brackets attach to the rack using 5/16-inch screws.
3. Puncture a hole in the grounding tape for each utility shelf screw location.
4. Attach the utility shelf to the rack using eight 5/16-inch screws. Torque each screw to 50 inch-pounds.
5. Reattach any cable brackets you removed.
6. Retighten any 5/16-inch screws on the upper cooling unit and the cable trough.

Install the GPS Clock Module

The Global Positioning System (GPS) clock module consists of a 1U module that contains two plug-in GPS receivers. The GPS clock module requires two GPS antennas. GPS antenna installation is described on page 92.

NOTE: The GPS clock module is only used in +24V base stations. Base stations configured for –48V power use clock source cards instead. See "Insert the Radio and Utility Shelf Cards" on page 75 for information.

To install the GPS clock module

1. Remove the GPS clock module from its antistatic packaging.
2. If necessary, attach the plug-in modules and the rack-mount brackets to the GPS clock module using the hardware supplied in the shipping kit.
3. Orient the GPS clock module so that the text on the front panel is right-side up.
4. Slide the GPS clock module into the radio rack directly above the upper cooling unit.

   The GPS clock module is located between the Ethernet patch panel and the upper cooling unit.
5. Puncture a hole in the grounding tape for each GPS clock module screw location.
6. Attach the GPS clock module to the rack using four 5/16-inch mounting screws. Torque each screw to 50 inch-pounds.

Install the RFSS Modules

If the configuration of your base station does not require a full complement of RFSS modules, some slots may be covered with filler panels.

CAUTION: Each RFSS module weighs approximately 15 kg (33 pounds).

To insert the RFSS modules in the RF rack

1. Remove the RFSS module from its protective bag.
2. Orient the RFSS module so that the text on the front panel is right-side up.
3. Slide the RFSS module into the first available RFSS slot. The slots should be filled from bottom to top, left to right.
4. Secure the module in the slot using four #2 Phillips thumb screws, one in each corner. Torque the thumb screws to 12 inch-pounds.
5. Ensure that the RFSS module is secure by grasping the handle on the front panel and pulling lightly. The RFSS module should not move.

   If the RFSS module does move, ensure that the mounting screws are attached to the shelf assembly and that the module is seated correctly. If necessary, remove the module and repeat this procedure.
6. Repeat steps 1 to 5 for the remaining RFSS modules.

Cover Empty RFSS Slots

Any empty slots in the RF shelves should be covered with RFSS filler panels. The RFSS filler panels protect the other RFSS modules from dust and ensure the required air flow to the installed RFSS modules.

To cover unused slots with RFSS filler panels

1. Remove the RFSS filler panel from its protective bag.
2. Orient the filler panel so that the text on the front panel is right-side up.
3. Secure the filler panel over the RFSS slots using four #2 Phillips screws, one on each corner. Torque the screws to 12 inch-pounds.
4. Ensure that the filler panel is secure by grasping the handle on the front panel and pulling lightly. The filler panel should not move.

   If the filler panel does move, ensure that the mounting screws are attached to the RF shelf assembly. If necessary, remove the filler panel and repeat this procedure.
5. Repeat steps 1 to 4 until all the empty slots are covered with filler panels.

POPULATING THE SHELVES

These procedures describe how to install the CompactPCI power supplies and cards into the utility and radio shelves.

Procedure	Page
Insert CompactPCI Power Supplies	73
Test CompactPCI Power Supplies	74
Insert the Radio and Utility Shelf Cards	75
Cover Unused Card Slots	77

NOTE: Your base station may arrive with the shelves already populated. If this is the case, ensure that the cards are properly secured in the shelf and proceed to the next section.

Depending on the configuration of your base station, the exact number, layout, model, and faceplates of the cards may vary. See your field engineering package for the specific layout.

WARNING: Failure to insert a card in the correct slot may result in damage to or destruction of the card or shelf. Ensure that all the cards are in the correct slots before powering on the shelves.

Host Card Compatibility

The base station supports the use of both Concurrent 310 and Ziatech 5550 processor cards for the utility bus controllers and radio sector controllers. However, the following guidelines must be followed:

- **Shelves must use the same type of card** – The radio and utility shelves can use either card type as a controller card. You cannot, however, use Concurrent and Ziatech cards in the same shelf.
- **Rear I/O cards must match processor card** – You cannot use a rear I/O card with the other type of processor card. Rear I/O cards must be of the same type.

Shelf Layout

Utility Shelf Layout

Table 4.1 and Figure 4.10 show the layout of the front-facing cards on the utility shelf.

Slot	Front-Facing Card	Slot	Front-Facing Card
0–1	Power supply 0	12	Alarm card 0
2–3	Power supply 1	13	Alarm card 1
4–5	Power supply 2	14	Utility bus controller 1
6	Ethernet switch 0	15–16	Hard disk drive 1
7–8	Hard disk drive 0	17	—
9	—	18	—
10	Utility bus controller 0	19	Ethernet switch 1
11	—	20	—

Table 4.1 Utility Shelf Layout (Front-Facing Cards)

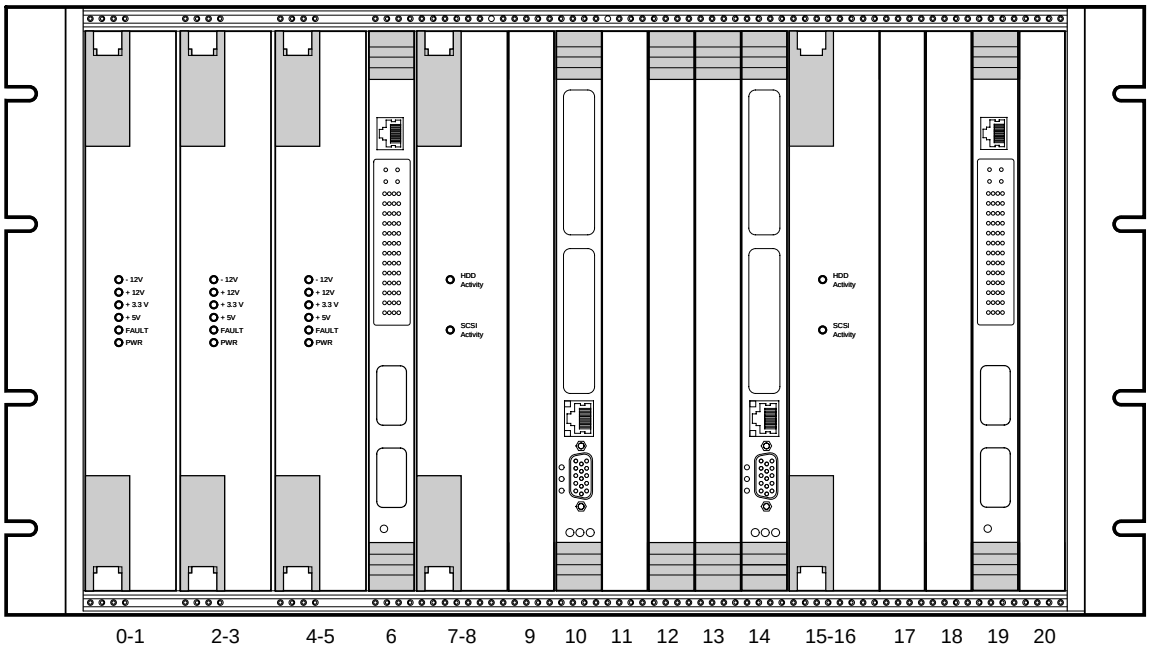

Figure 4.10 Utility Shelf Layout (Front View)

Table 4.2 and Figure 4.11 show the layout of the rear-facing cards on the utility shelf.

Slot	Rear-Facing Card	Slot	Rear-Facing Card
6–7	Ethernet switch rear I/O card	14	Utility bus controller rear I/O card
8	—	15	—
9	—	16	—
10	Utility bus controller rear I/O card	17	—
11	—	18	—
12–13	Alarm wiring card	19–20	Ethernet switch rear I/O card

Table 4.2 Utility Shelf Layout (Rear-Facing Cards)

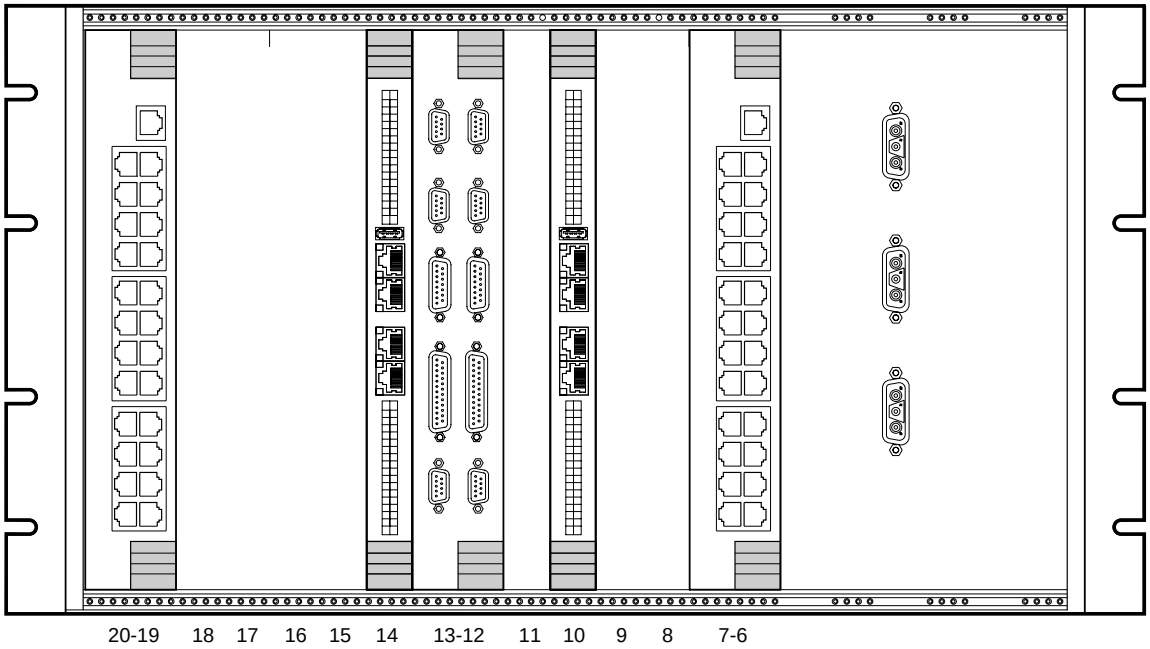

Figure 4.11 Utility Shelf Layout (Rear View)

Radio Shelf Layout

Table 4.3 and Figure 4.12 show the layout of the front-facing cards on the radio shelf.

Slot	Front-Facing Card	Slot	Front-Facing Card
0–1	Power supply 0	12	Radio sector controller
2–3	Power supply 1	13	—
4–5	Power supply 2	14	Radio sector controller
6	Radio modem 3	15–16	IF/RF card
7	Radio modem 2	17	Radio modem 0
8	Radio modem 1	18	Radio modem 1
9	Radio modem 0	19	Radio modem 2
10–11	IF/RF card	20	Radio modem 3

Table 4.3 Radio Shelf Layout (Front-Facing Cards)

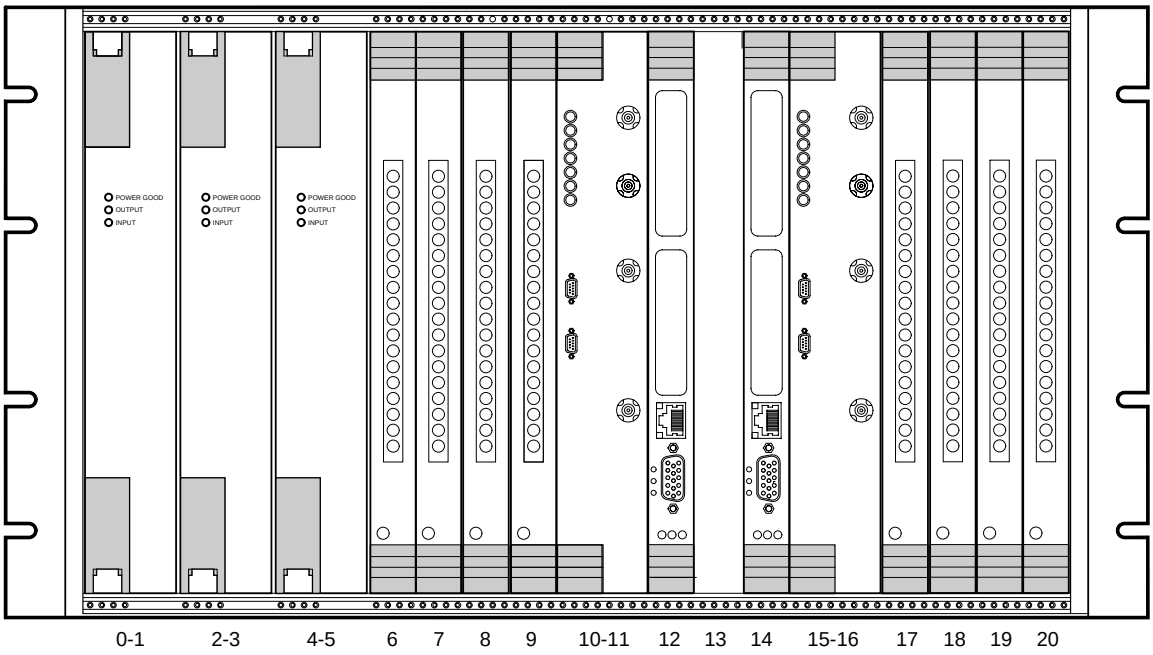

Figure 4.12 Radio Shelf Layout (Front View)

Table 4.4 and Figure 4.13 show the layout of the rear-facing cards on the radio shelf.

Slot	Rear-Facing Card	Slot	Rear-Facing Card
6	—	14	Radio sector controller rear I/O card
7	—	15	Clock source card (–48V base stations only)
8	—	16	Clock wiring card (+24V base stations only)
9	—	17	—
10	Clock source card (–48V base stations only)	18	—
11	Clock wiring card (+24V base stations only)	19	—
12	Radio sector controller rear I/O card	20	—
13	—		

Table 4.4 Radio Shelf Layout (Rear-Facing Cards)

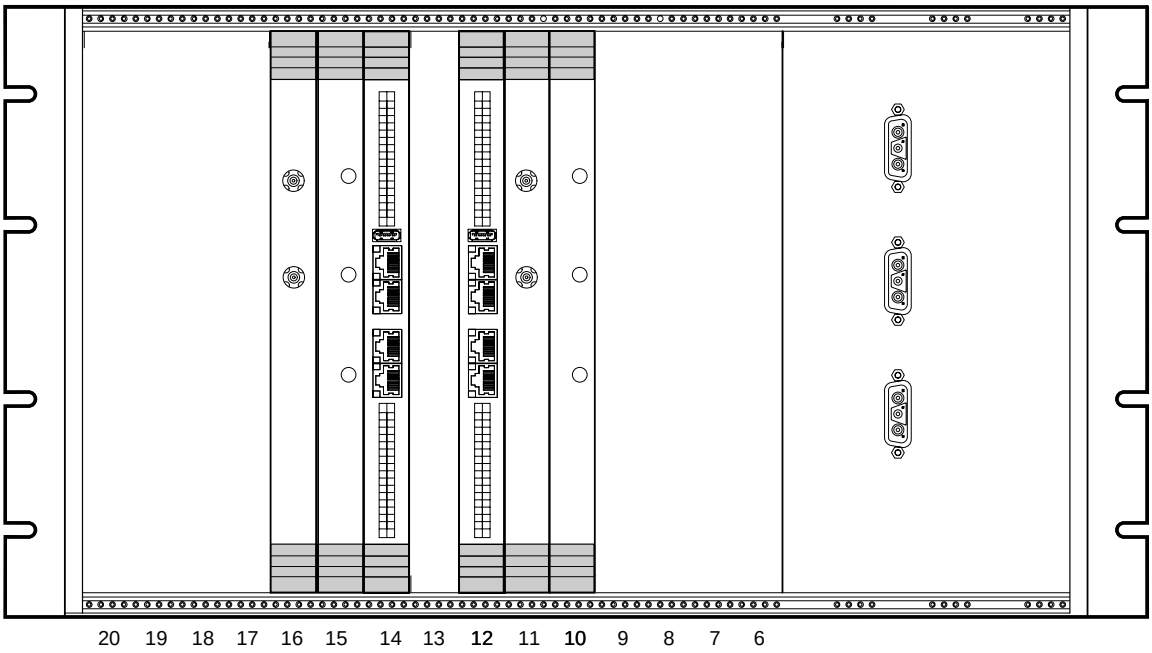

Figure 4.13 Radio Shelf Layout (Rear View)

Insert CompactPCI Power Supplies

The radio and utility shelves each contain two or three identical CompactPCI power supplies. See pages 69 and 71 for the locations of the power supplies.

Utility shelves and completely filled radio shelves use three power supplies each; half-full radio shelves require only two power supplies. This ensures that the shelves will continue to operate should one of the power supplies fail.

WARNING: The power supplies use components that are sensitive to electrostatic discharges (ESD). Make sure you are wearing an approved and regularly tested grounded wrist strap connected to the grounding point on the PDP. When you handle the power supplies, hold them by their handles or edges. Do not touch electrical connections, pins, or soldered surfaces.

To insert CompactPCI power supplies

1. Ensure that there are no obstructions in the slot or on the guide rails.
2. Remove a CompactPCI power supply from its antistatic bag.
3. Set the two ejector handles on the power supply in the open position by turning the handles away from the center of the front panel while pressing the locking tabs located at the end of each handle.

   In the open position, the ejector handles are at an approximately 30° angle from the front panel.
4. Ensure that the two mounting screws located under and beside each ejector handle are withdrawn enough to allow for the insertion of the power supply.
5. Orient the power supply so that the text on the front panel is right-side up.
6. Slide the power supply into the left-most unoccupied power slot. Use the guide rails to ensure the connectors are aligned. Apply sufficient pressure to fully mate the power supply with the shelf.
7. Lock the power supply in the slot by pressing down on the ejector handles until the handles are flush with the front panel.

   You can hear a click when the lock engages.
8. Secure the power supply in the slot using four 2.5-mm mounting screws. Torque each screw to 4 inch-pounds.
9. Repeat steps 1 to 8 for the remaining power supplies.

Test CompactPCI Power Supplies

This procedure describes how to test the CompactPCI power supplies and shelves for electrical faults. Testing the power supplies and shelves before inserting the cards ensures that, in the unlikely event that an electrical fault does occur, no cards will be damaged.

To test CompactPCI power supplies

1. Ensure that your main DC power supply is powered on and is providing a power source that meets the electrical requirements listed on page 23.
2. Power on each power supply in the utility and radio shelves separately. Wait at least 10 s before powering on the next power supply.

WARNING: The red OUTPUT FAIL light on each power supply should turn off within 3 s. If the OUTPUT FAIL light remains on or flickers continuously, power down the shelf immediately and replace the power supply. If the replacement power supply also indicates a fault condition, your shelf may be damaged. Replace the shelf before continuing with the installation.

Table 4.5 shows the circuit breakers for each power supply.

Power Supply		Circuit Breaker	
Shelf	**Module**	**Rack**	**Number**
Radio 0	Left (slots 0–1)	Radio	02
Radio 0	Middle (slots 2–3)	Radio	03
Radio 0	Right (slots 4–5)	Radio	04
Radio 1	Left (slots 0–1)	Radio	05
Radio 1	Middle (slots 2–3)	Radio	06
Radio 1	Right (slots 4–5)	Radio	07
Radio 2	Left (slots 0–1)	Radio	08
Radio 2	Middle (slots 2–3)	Radio	09
Radio 2	Right (slots 4–5)	Radio	10
Utility	Left (slots 0–1)	Radio	11
Utility	Middle (slots 2–3)	Radio	12
Utility	Right (slots 4–5)	Radio	13

Table 4.5 Utility and Radio Shelf Power Supply Circuit Breaker Summary

3. Power off all the power supplies in the radio and utility shelves.
4. Power off your main DC power supply.

Insert the Radio and Utility Shelf Cards

See pages 69 to 72 for the location of each card. If the configuration of your base station does not use a full complement of cards, some slots will be left empty.

WARNING: The cards use components that are sensitive to electrostatic discharges (ESD). Make sure you are wearing an approved and regularly tested grounded wrist strap connected to the grounding point on the PDP. When you handle the cards, hold them by their handles or edges. Do not touch electrical connections, pins, or soldered surfaces.

The pins on the backplane are easily damaged. When inserting cards (especially the hard disk drives), ensure that the connectors are properly aligned before applying sufficient pressure to seat the card. Apply equal pressure to both ejector handles when inserting the card. Failure to do so may result in the pins or connectors being damaged.

Figure 4.14 shows how to properly insert a card into a shelf.

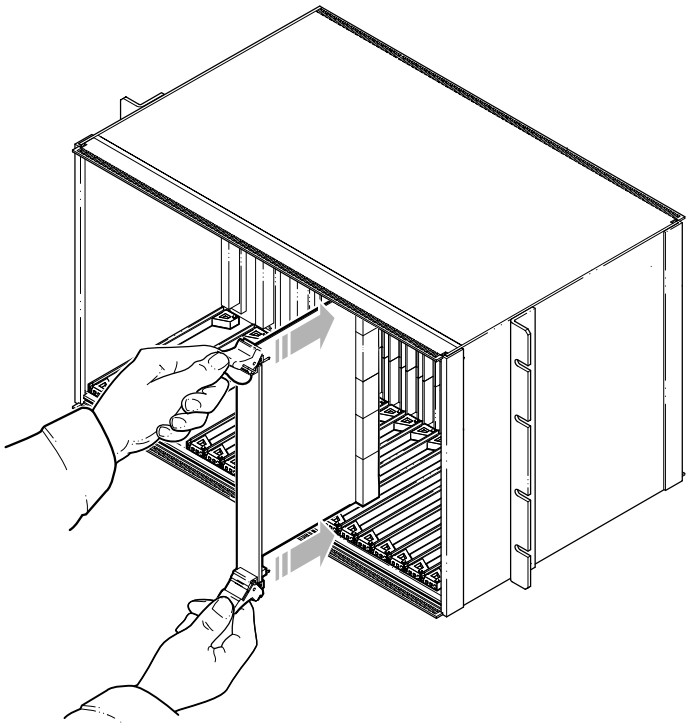

Figure 4.14 Card Insertion

To insert the cards into the utility and radio shelves

1. Ensure that there are no obstructions in the slot or on the guide rails and check the backplane for bent pins.

   If there are bent pins, the backplane is damaged and requires repair. Report any damaged equipment to your field support coordinator as soon as possible.

2. Remove the card from its antistatic bag.

3. Set the two ejector handles on the card in the open position by turning the handles away from the center of the front panel.

   In the open position, the ejector handles are at an approximately 45° angle from the front panel.

4. Ensure that the mounting screws are withdrawn enough to allow for the insertion of the card.

   Single-slot cards have two mounting screws, one located under each ejector handle. Double-slot cards have four mounting screws, one located under each ejector handle and one located beside each ejector handle.

5. Orient the card so that the text on the front panel is right-side up. The guide pins should be located to the right of the ejector handles.

6. Slide the card into the correct slot. Slot locations are shown on pages 69 to 72. Use the guide rails to ensure the connectors are aligned.

7. Apply sufficient pressure to fully mate the card by pressing on both ejector handles with equal force. If present on the card, the guide pins should slide into the round holes located at the top and the bottom of each slot on the right-hand side.

8. Lock the card in the slot by turning the ejector handles towards the center of the front panel.

   In the lock position, the ejector handles are at a 90° angle from the front panel.

9. Secure the card in the slot by installing the 2.5-mm mounting screws. Torque each screw to 4 inch-pounds.

10. Repeat steps 1 to 9 for the remaining cards.

Cover Unused Card Slots

Any empty slots in the radio and utility shelves should be covered with filler panels. The filler panels ensure airflow to the other cards and protect the cards from dust and electromagnetic interference.

To cover the unused slots with filler panels

1. Remove the filler panel from its protective bag.
2. Set the two ejector handles on the filler panel in the open position by turning the handles away from the center of the front panel.

   In the open position, the ejector handles are at an approximately 45° angle from the front panel.
3. Ensure that the mounting screws are withdrawn enough to allow for the insertion of the filler panel.

   Single-slot filler panels have two mounting screws, one located under each ejector handle. Double-slot filler panels have four mounting screws, one located under each ejector handle and one located beside each ejector handle.
4. Orient the filler panel so that the guide pins are on the right-hand side of the ejector handles.
5. Slide the filler panel into the slot. The guide pins should slide into the round holes located at the top and the bottom of each slot on the right-hand side. Apply sufficient pressure to fully mate the filler panel with the shelf.
6. Lock the filler panel in the slot by turning the handles towards the center of the front panel.

   In the lock position, the ejector handles are at a 90° angle from the front panel.
7. Secure the filler panel in the slot by installing the 2.5-mm mounting screws. Torque each screw to 4 inch-pounds.
8. Ensure that the filler panel is secure by grasping both ejector handles and pulling lightly. The filler panel should not move.

   If the filler panel does move, ensure that the mounting screws are attached to the shelf frame. If necessary, remove the panel and repeat this procedure.
9. Repeat steps 1 to 8 until all the empty slots are covered with filler panels.

CONNECTING THE CABLES

This section describes the cables connecting the different systems in the base station.

Procedure	Page
Connect the PDP Power Cables	79
Connect the RFSS Signal Cables	83
Connect the Alarm Cables	85
Connect the Ethernet Cables	86
Connect the Clock Cables	87
Connect the RF Cables	88
Connect Ferrite Blocks	90

NOTE: The cables are packaged according to their type. Each type of cable may be available in different lengths to simplify cable dressing. The length of each cable is shown on its label (typically, using a -## format that follows the item's part number).

The actual lengths of the cables shipped with your system may differ from those described in this document.

NOTE: Base stations supporting different numbers of sectors use similar cabling. For example, a two-sector base station uses the same cabling as a one-sector base station but has additional cables for use by the other sectors.

Connect the PDP Power Cables

The PDP power cables for each rack are attached to the PDP at the factory. The power cables are already tied to the rack.

The PDP power cables consist of #10, #12, or #16 AWG wire with 3-pin DSUB connectors on each end. The connectors are secured to the racks with 1/8-inch flathead screws.

Component Numbering

When viewed from the back of the base station, the connectors for the PDP circuit breakers (CB) are labeled from right to left (that is, CB 01 is the right-most breaker and CB 15 is the third breaker from the left).

Each utility and radio shelf has three power supply (PS) connectors: PS2 is the top connector, PS0 is the middle connector, and PS1 is the bottom connector.

The RF shelves are numbered from bottom to top (that is, the bottom shelf is “0” and the top shelf is “2”). When viewed from the front of the base station, the RFSS modules in each shelf are numbered from left to right (that is, the left module is “0” and the right module is “3”).

Figure 4.15 shows the location of the power connectors on the radio rack. Figure 4.16 shows the location of the power connectors on the RF rack.

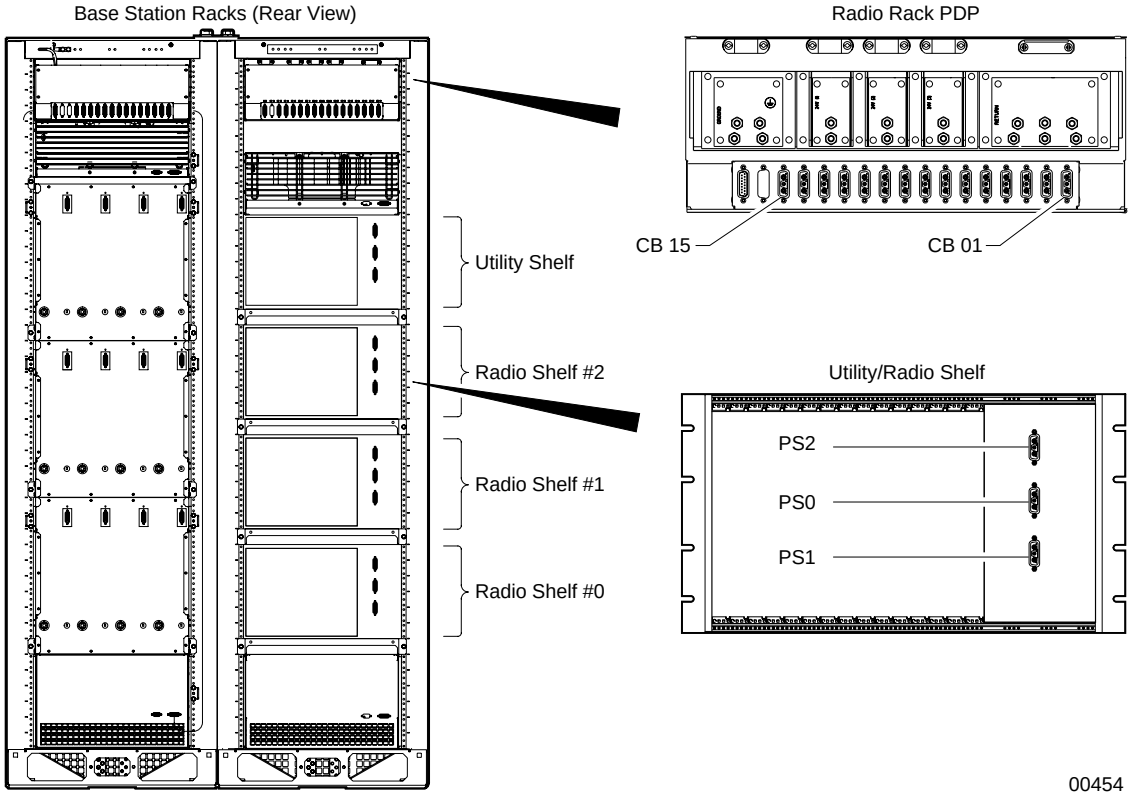

Figure 4.15 Radio Rack Connector Layout

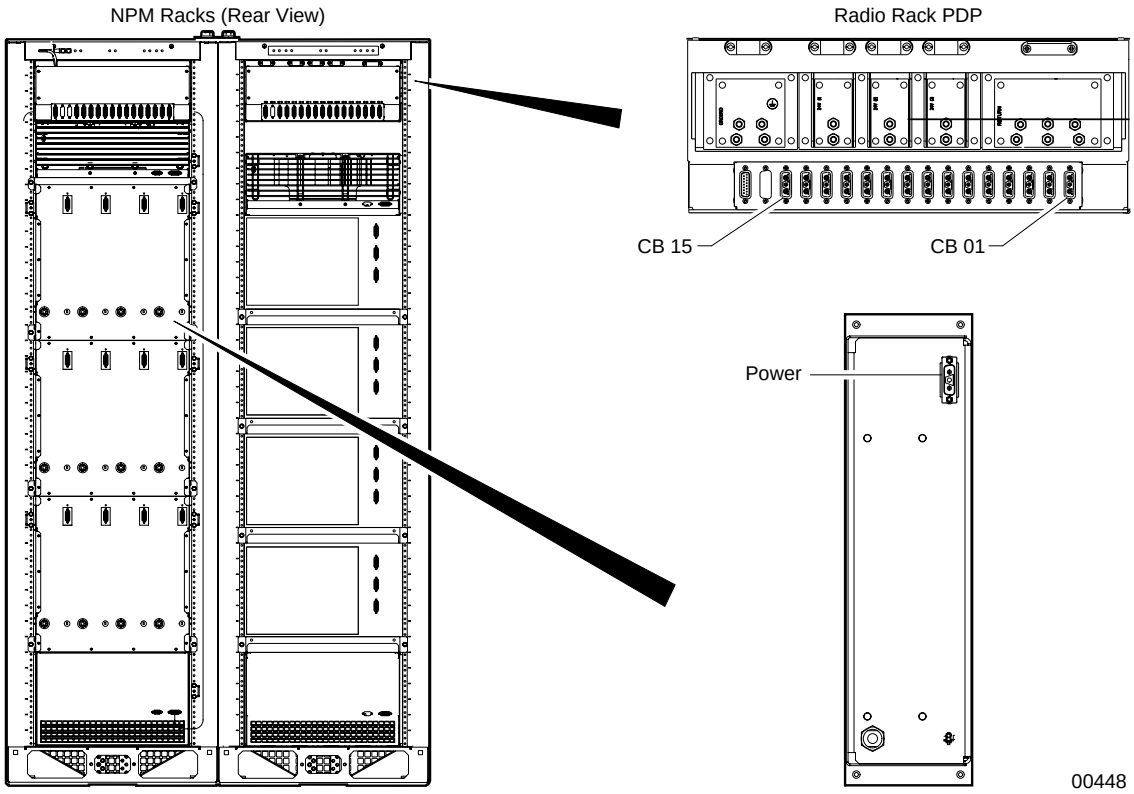

Figure 4.16 RF Rack Connector Layout

To connect the PDP power cables

1. Ensure that each PDP circuit breaker in the radio and RF rack is in the OFF (down) position.
2. Connect each PDP power cable in the radio rack. Table 4.6 shows the origin and termination point of each cable.

Origin			Termination		
Rack	**Module**	**Circuit Breaker**	**Rack**	**Module**	**Port**
Radio	PDP	01	Radio	Lower cooling unit	Power
Radio	PDP	02	Radio	Radio shelf 0	PS0
Radio	PDP	03	Radio	Radio shelf 0	PS1
Radio	PDP	04	Radio	Radio shelf 0	PS2
Radio	PDP	05	Radio	Radio shelf 1	PS0
Radio	PDP	06	Radio	Radio shelf 1	PS1
Radio	PDP	07	Radio	Radio shelf 1	PS2
Radio	PDP	08	Radio	Radio shelf 2	PS0
Radio	PDP	09	Radio	Radio shelf 2	PS1
Radio	PDP	10	Radio	Radio shelf 2	PS2
Radio	PDP	11	Radio	Utility shelf	PS0
Radio	PDP	12	Radio	Utility shelf	PS1
Radio	PDP	13	Radio	Utility shelf	PS2
Radio	PDP	14	Radio	Upper cooling unit	Power
Radio	PDP	15	Radio	GPS clock module	Power

Table 4.6 Radio Rack Power Cable Summary

NOTE: Base stations supporting less than six sectors will have empty radio shelves that do not require power.

3 Connect each PDP power cable in the RF rack. The power connectors for the RFSS module are located at the back of the rack. Table 4.7 shows the origin and termination point of each cable.

Origin			Termination		
Rack	**Module**	**Circuit Breaker**	**Rack**	**Module**	**Port**
RF	PDP	01	RF	Lower cooling unit	Power
RF	PDP	02	RF	RF shelf 0, RFSS module 0	PWR
RF	PDP	03	RF	RF shelf 0, RFSS module 1	PWR
RF	PDP	04	RF	RF shelf 0, RFSS module 2	PWR
RF	PDP	05	RF	RF shelf 0, RFSS module 3	PWR
RF	PDP	06	RF	RF shelf 1, RFSS module 0	PWR
RF	PDP	07	RF	RF shelf 1, RFSS module 1	PWR
RF	PDP	08	RF	RF shelf 1, RFSS module 2	PWR
RF	PDP	09	RF	RF shelf 1, RFSS module 3	PWR
RF	PDP	10	RF	RF shelf 2, RFSS module 0	PWR
RF	PDP	11	RF	RF shelf 2, RFSS module 1	PWR
RF	PDP	12	RF	RF shelf 2, RFSS module 2	PWR
RF	PDP	13	RF	RF shelf 2, RFSS module 3	PWR
RF	PDP	14	RF	Upper cooling unit	Power

Table 4.7 RF Rack Power Cable Summary

NOTE: Base stations supporting less than six sectors will have empty RF shelves that do not require power.

Connect the RFSS Signal Cables

The signal cables are serial cables with 9-pin DSUB connectors on each end. The connectors are secured to their receptacles with 1/8-inch flathead screws.

Component Numbering

The RF shelves are numbered from bottom to top (that is, the bottom shelf is “0” and the top shelf is “2”). When viewed from the front of the base station, the RFSS modules in each shelf are numbered from left to right (that is, the left module is “0” and the right module is “3”).

The radio shelves are numbered from bottom to top (that is, the bottom shelf is “0” and the top shelf is “2”). Each radio shelf contains two IF/RF cards, one in slots 10–11 and one in slots 15–16.

Figure 4.17 shows the location of the RFSS signal connectors.

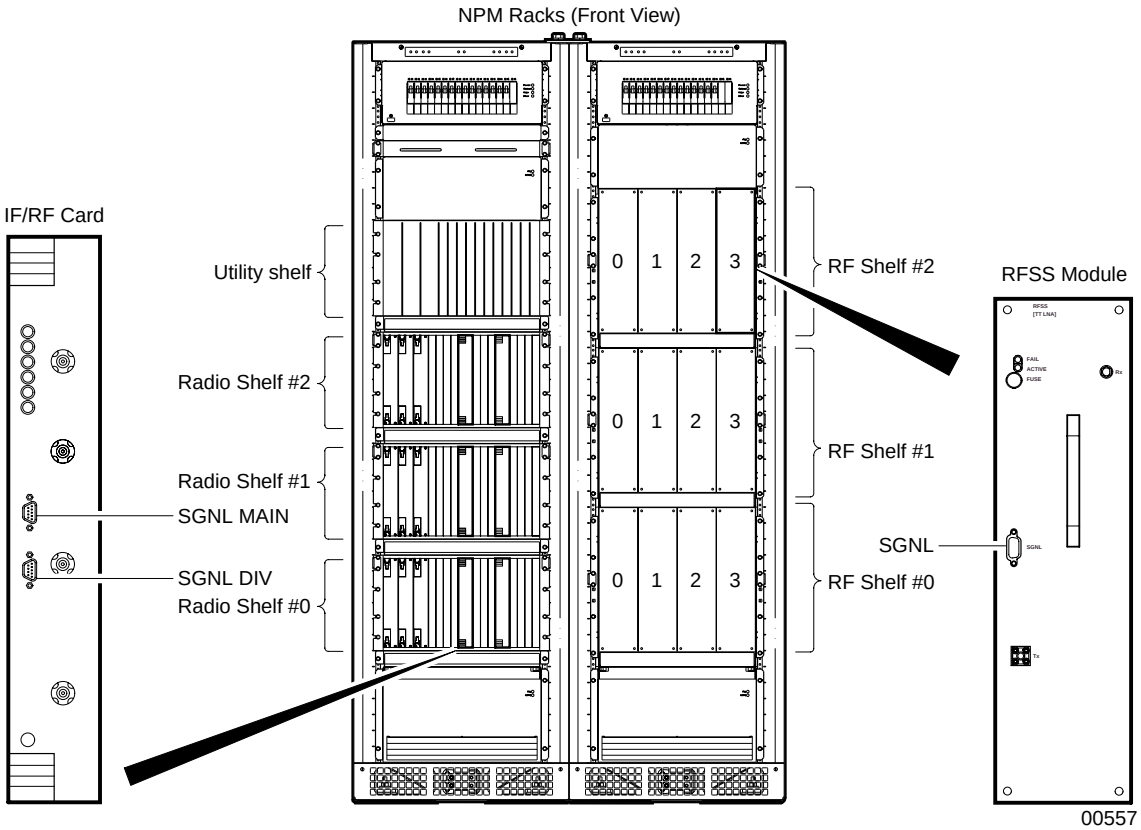

Figure 4.17 RFSS Signal Connector Layout

To connect the RFSS signal cables

1 Connect each RFSS signal cable. Table 4.8 shows the origin and termination point of each cable.

	Origin			Termination		
Sector	**Shelf**	**Module**	**Port**	**Shelf**	**Card**	**Port**
1	RF 0	0	SGNL	Radio 0	IF/RF slot 10–11	SGNL MAIN
	RF 0	1	SGNL	Radio 0	IF/RF slot 10–11	SGNL DIV
2	RF 0	2	SGNL	Radio 0	IF/RF slot 15–16	SGNL MAIN
	RF 0	3	SGNL	Radio 0	IF/RF slot 15–16	SGNL DIV
3	RF 1	0	SGNL	Radio 1	IF/RF slot 10–11	SGNL MAIN
	RF 1	1	SGNL	Radio 1	IF/RF slot 10–11	SGNL DIV
4	RF 1	2	SGNL	Radio 1	IF/RF slot 15–16	SGNL MAIN
	RF 1	3	SGNL	Radio 1	IF/RF slot 15–16	SGNL DIV
5	RF 2	0	SGNL	Radio 2	IF/RF slot 10–11	SGNL MAIN
	RF 2	1	SGNL	Radio 2	IF/RF slot 10–11	SGNL DIV
6	RF 2	2	SGNL	Radio 2	IF/RF slot 15–16	SGNL MAIN
	RF 2	3	SGNL	Radio 2	IF/RF slot 15–16	SGNL DIV

Table 4.8 RFSS Signal Cable Summary

Connect the Alarm Cables

The alarm cables are serial cables with DSUB connectors on each end. The DSUB connectors are secured to their receptacles with 1/8-inch flathead screws.

WARNING: Ensure that the main DC power supply for the base station is powered off before connecting the alarm cables. The PDP alarm cables are hot at all times and are not hot-swappable, even when the circuit breakers in the PDP are powered OFF (down). Failure to power off the main DC power supply may result in damage to the cables and base station.

The PDP alarm cables are not hot-swappable. Do not disconnect a PDP alarm cable (labeled “RADIO PDP” or “RF PDP”) from the alarm wiring card if the base station is receiving +24V/–48V DC or if the fuses in the PDP have not been temporarily removed.

To connect the alarm cables

1. Ensure that the main DC power supply is powered off.
2. Connect the alarm cables to the alarm wiring card. Table 4.9 shows the origin and termination point of each cable.

Origin		Termination		
Card	**Port**	**Rack**	**Unit**	**Port**
Alarm wiring (slot 12–13)	UPPER COOLING RF	RF	Upper cooling unit	SIGNAL
Alarm wiring (slot 12–13)	UPPER COOLING RADIO	Radio	Upper cooling unit	SIGNAL
Alarm wiring (slot 12–13)	LOWER COOLING RF	RF	Lower cooling unit	SIGNAL
Alarm wiring (slot 12–13)	LOWER COOLING RADIO	Radio	Lower cooling unit	SIGNAL
Alarm wiring (slot 12–13)	RF PDP	RF	PDP	SGNL
Alarm wiring (slot 12–13)	RADIO PDP	Radio	PDP	SGNL
Alarm wiring (slot 12–13)	GPS CONTROL	Radio	GPS clock module	CONTROL
Alarm wiring (slot 12–13)	GPS ALARM	Raid	GPS clock module	ALARM

Table 4.9 Alarm Cable Summary

Connect the Ethernet Cables

The Ethernet cables are CAT5 cables with RJ-45 connectors on each end. The cables connect radio sector controllers (RSC), utility bus controllers (UBC), Ethernet switches (SW), and edge routers. The two Ethernet switches are connected together with a cross-over cable; the other cards use straight-through cables.

NOTE: The Ethernet cabling is done via rear I/O cards. The Ethernet ports on the front-facing cards are not used.

		Origin		Termination	
Connection		**Card**	**Port**	**Card**	**Port**
To edge router		SW0	1	Edge router	
		SW1	1	Edge router	
Cross-over to other Ethernet switch		SW0	3	SW1	3
		SW0	4	SW1	4
Utility bus controllers		SW0	5	UBC0	eth0 (A)
		SW0	6	UBC1	eth0 (A)
		SW1	5	UBC0	eth1 (B)
		SW1	6	UBC1	eth1 (B)
Radio sector controllers	Sector 1	SW0	7	RSC0	eth0 (A)
		SW1	7	RSC0	eth1 (B)
	Sector 2	SW0	8	RSC1	eth0 (A)
		SW1	8	RSC1	eth1 (B)
	Sector 3	SW0	9	RSC2	eth0 (A)
		SW1	9	RSC2	eth1 (B)
	Sector 4	SW0	10	RSC3	eth0 (A)
		SW1	10	RSC3	eth1 (B)
	Sector 5	SW0	11	RSC4	eth0 (A)
		SW1	11	RSC4	eth1 (B)
	Sector 6	SW0	12	RSC5	eth0 (A)
		SW1	12	RSC5	eth1 (B)

Table 4.10 Ethernet Cabling

To connect the Ethernet cables

1. Connect the Ethernet cables to the Ethernet switches. Table 4.10 shows the origin and termination point of each cable.

NOTE: See your field engineering package for information about your edge router cable connections.

Connect the Clock Cables

The GPS clock module receives its timing signals from the GPS antennas via two coaxial cables with male TNC connectors on each end. The clock cables use 0.195-inch coaxial cables with male SMA connectors to distribute the timing signals to the clock wiring cards.

NOTE: Clock cables are only required on +24V base stations. Base stations configured for –48V operation use a clock source card and do not require clock cables or a GPS clock module.

Component Numbering

The radio shelves are numbered from bottom to top (that is, the bottom shelf is “0” and the top shelf is “2”). Each radio shelf contains two rear-facing clock wiring cards, one in slot 11 and one in slot 16.

The GPS clock module outputs are numbered from left to right when viewed from the back of the base station.

To connect the clock cables

1. Connect the two GPS antenna cables to the Antenna 1 and Antenna 2 ports located on the rear of the GPS clock module.
2. Connect the GPS clock module to the clock wiring cards using the clock cables. Table 4.11 shows the origin and termination point of each cable.

NOTE: The minimum bend radius for clock cables is 2.54 cm (1.0 inch).

	Origin		Termination		
Sector	**Module**	**Port**	**Shelf**	**Card**	**Port**
1	GPS	FREQUENCY OUT 1	Radio 0	clock wiring (slot 11)	FREQUENCY
2	GPS	FREQUENCY OUT 2	Radio 0	clock wiring (slot 16)	FREQUENCY
3	GPS	FREQUENCY OUT 3	Radio 1	clock wiring (slot 11)	FREQUENCY
4	GPS	FREQUENCY OUT 4	Radio 1	clock wiring (slot 16)	FREQUENCY
5	GPS	FREQUENCY OUT 5	Radio 2	clock wiring (slot 11)	FREQUENCY
6	GPS	FREQUENCY OUT 6	Radio 2	clock wiring (slot 16)	FREQUENCY

Table 4.11 Clock Cable Summary

Connect the RF Cables

The RF cables are 0.195-inch coaxial cables with male SMA connectors on each end.

Component Numbering

The RF shelves are numbered from bottom to top (that is, the bottom shelf is “0” and the top shelf is “2”). When viewed from the front of the base station, the RFSS modules in each shelf are numbered from left to right (that is, the left module is “0” and the right module is “3”).

The radio shelves are numbered from bottom to top (that is, the bottom shelf is “0” and the top shelf is “2”). Each radio shelf contains two IF/RF cards, one in slots 10–11 and one in slots 15–16.

Figure 4.18 shows the layout of the RFSS modules and IF/RF cards.

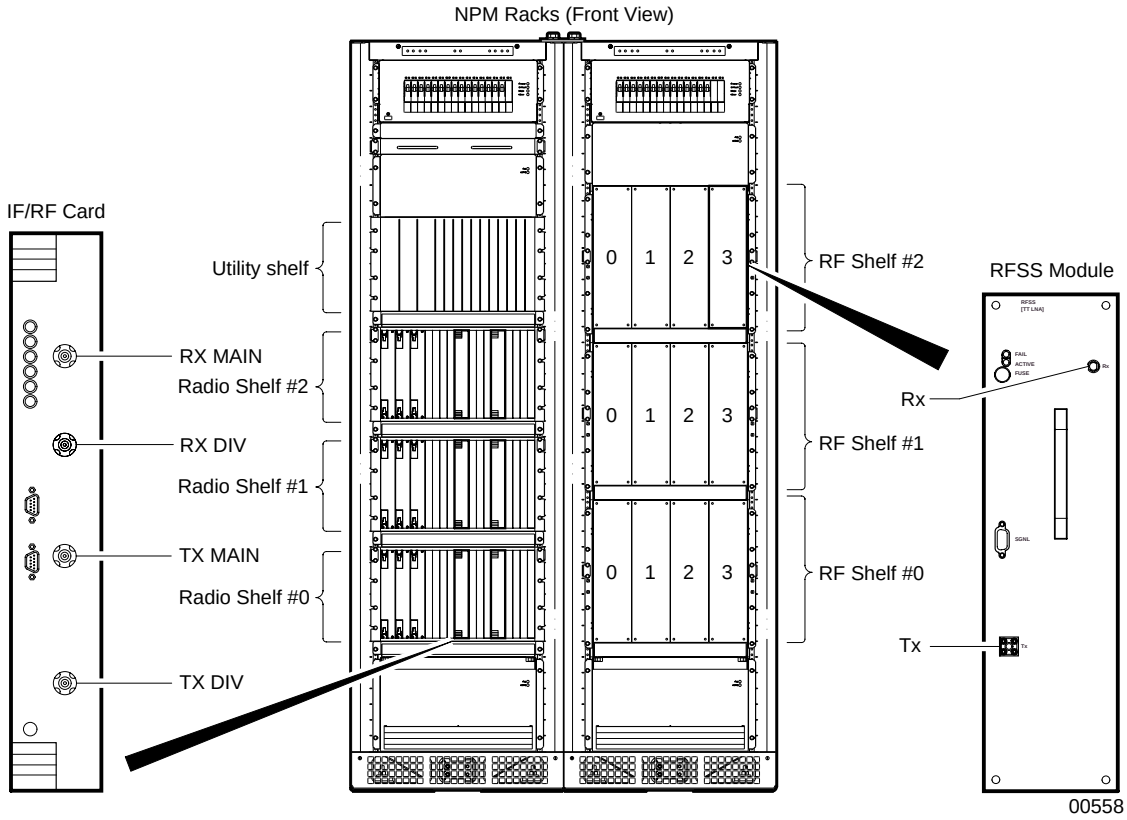

Figure 4.18 RF Connector Locations

To connect the RF cables

1 Connect each RF cable. Table 4.12 shows the origin and termination point of each cable.

NOTE: The minimum bend radius for RF cables is 2.54 cm (1.0 inch).

	Origin			Termination		
Sector	**Shelf**	**Module**	**Port**	**Shelf**	**Card**	**Port**
1	RF 0	0	RX	Radio 0	IF/RF slot 10–11	RX MAIN
	RF 0	0	TX	Radio 0	IF/RF slot 10–11	TX MAIN
	RF 0	1	RX	Radio 0	IF/RF slot 10–11	RX DIV
	RF 0	1	TX	Radio 0	IF/RF slot 10–11	TX DIV
2	RF 0	2	RX	Radio 0	IF/RF slot 15–16	RX MAIN
	RF 0	2	TX	Radio 0	IF/RF slot 15–16	TX MAIN
	RF 0	3	RX	Radio 0	IF/RF slot 15–16	RX DIV
	RF 0	3	TX	Radio 0	IF/RF slot 15–16	TX DIV
3	RF 1	0	RX	Radio 1	IF/RF slot 10–11	RX MAIN
	RF 1	0	TX	Radio 1	IF/RF slot 10–11	TX MAIN
	RF 1	1	RX	Radio 1	IF/RF slot 10–11	RX DIV
	RF 1	1	TX	Radio 1	IF/RF slot 10–11	TX DIV
4	RF 1	2	RX	Radio 1	IF/RF slot 15–16	RX MAIN
	RF 1	2	TX	Radio 1	IF/RF slot 15–16	TX MAIN
	RF 1	3	RX	Radio 1	IF/RF slot 15–16	RX DIV
	RF 1	3	TX	Radio 1	IF/RF slot 15–16	TX DIV
5	RF 2	0	RX	Radio 2	IF/RF slot 10–11	RX MAIN
	RF 2	0	TX	Radio 2	IF/RF slot 10–11	TX MAIN
	RF 2	1	RX	Radio 2	IF/RF slot 10–11	RX DIV
	RF 2	1	TX	Radio 2	IF/RF slot 10–11	TX DIV
6	RF 2	2	RX	Radio 2	IF/RF slot 15–16	RX MAIN
	RF 2	2	TX	Radio 2	IF/RF slot 15–16	TX MAIN
	RF 2	3	RX	Radio 2	IF/RF slot 15–16	RX DIV
	RF 2	4	RX	Radio 2	IF/RF slot 15–16	TX DIV

Table 4.12 RF Cable Summary

Connect Ferrite Blocks

Ferrite blocks are required on some alarm and IF/RF signal cables for regulatory compliance. Figure 4.19 shows which cables on the alarm wiring and IF/RF cards require ferrite blocks.

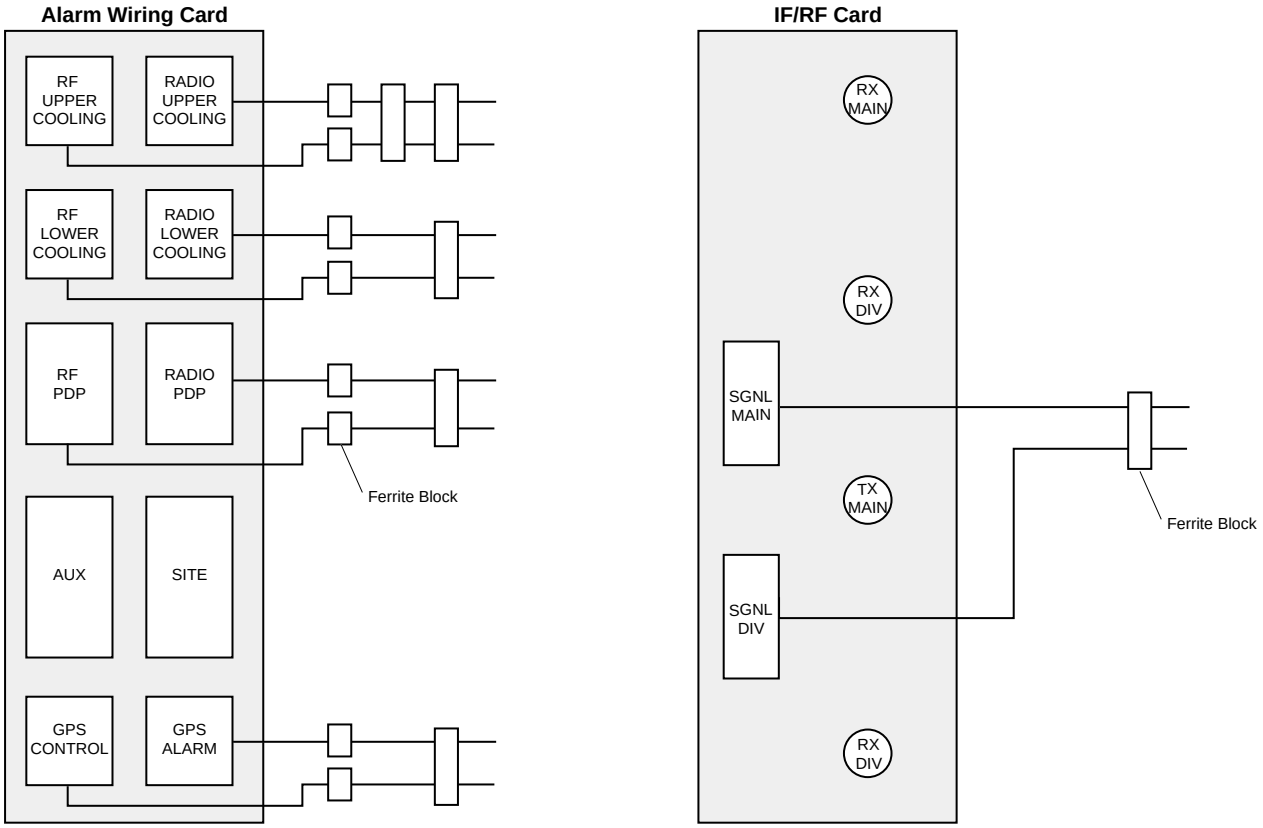

Figure 4.19 Ferrite Block Installation

To connect ferrite blocks to cables

1. Connect a ferrite block to each IF/RF card's pair of SGNL MAIN and DIV cables. One ferrite block is used for both cables.
2. Connect a ferrite block to each of the following alarm wiring card cables:
   - UPPER and LOWER COOLING RF cables
   - UPPER and LOWER COOLING RADIO cables
   - RF and RADIO PDP cables
3. Connect two ferrite blocks to the alarm wiring card's UPPER COOLING RF and RADIO cables. Each ferrite block is connected to both cables.
4. Connect one ferrite block to the following pairs of cables on the alarm wiring card:
   - LOWER COOLING RF and RADIO cables
   - RF and RADIO PDP cables
   - GPS CONTROL and ALARM cables

Chapter 5

ANTENNA INSTALLATION PROCEDURES

This chapter provides an overview of the installation process. Please familiarize yourself with the installation process in general before proceeding to the next chapter.

Contents

Install the GPS Antennas 92
Install the Main and Diversity Antennas 94
Measure VSWR and Return Loss 97
Measure the Distance to a Fault 99

Install the GPS Antennas

This procedure describes how to install two Zyfer GPS antennas on top of 1-inch-diameter, hollow pipes using the supplied hardware. Consult your field engineering package for any site-specific GPS antenna installation requirements.

WARNING: Before proceeding with the installation of the antennas, consult the applicable local code of wiring for requirements, including: clearance from power and lightning conductors, proper mounting methods, and antenna grounding.

Figure 5.1 shows the Zyfer GPS antenna assembly.

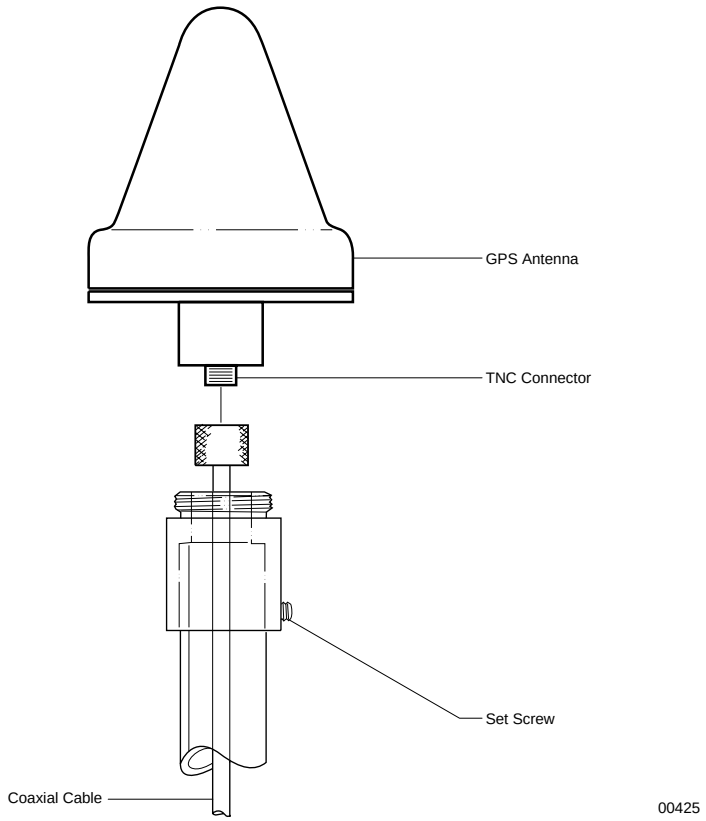

Figure 5.1 GPS Antenna Assembly

Before You Begin

Before you begin to install the GPS antennas:

- Select an installation location away from any objects that might obstruct satellite visibility to 10° of the horizon. Obstructions may cause a degradation of the GPS clock module's performance.
- Each antenna must be mounted at least 50 cm (20 inches) from the other antenna and any other GPS antennas that may be present.
- Ensure that the type and length of cabling used to connect the GPS antenna to the GPS clock module meets your attenuation and shielding requirements.

To install the GPS antennas

1. Run the two coaxial cables supplied with each antenna from the racks to the intended location of the GPS antennas, such as the base station's roof or tower.

   NOTE: Ensure that the cable remains clear of any sources of potential interference, such as transmitting equipment or power lines.

2. Vertically install two 1-inch-diameter pipes in a location that provides the maximum unobstructed view of the sky.
3. Run a coaxial cable through the center of each pipe.
4. Attach a pipe adapter to the top of each pipe. Ensure that the pipe adapters are connected tightly to the pipes by tightening the set screw. Use a 5/32-inch Allen key to tighten the set screw.
5. Attach a GPS antenna to the end of each coaxial cable.

   The GPS antennas use female TNC connectors.
6. Attach the GPS antennas to each pipe adapter.

Install the Main and Diversity Antennas

This procedure describes the general process for installing the main and diversity antennas. Consult your field engineering package for any site-specific antenna installation requirements.

WARNING: Before proceeding with the installation of the antennas, consult the applicable local code of wiring for requirements, including: clearance from power and lightning conductors, proper mounting methods, and antenna grounding.

Before You Begin

Before you install the antennas:

- Select an installation location away from any objects that might obstruct the RF signals. Although the base station has non-line-of-site RF capability, obstructions may reduce the strength of the transmission or reception signals.
- Ensure that the type and length of cabling used to connect the main and diversity antennas to the RFSS modules meet your attenuation and shielding requirements.

Cabling and Connectors

Figure 5.2 shows the main and diversity antenna cabling and connectors.

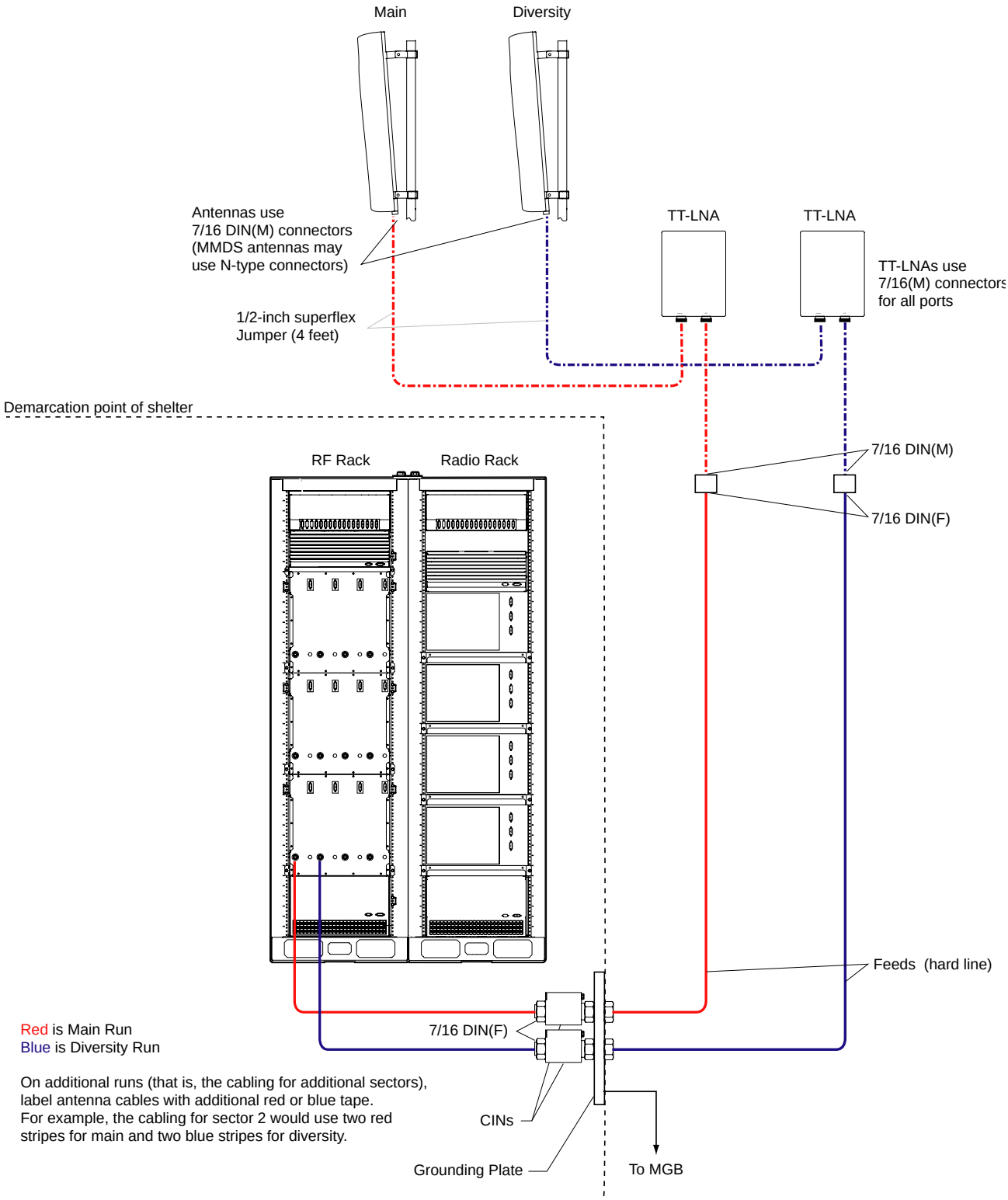

Figure 5.2 RFSS with TMA Antenna Configuration

To install the main and diversity antennas

1. Verify that you have the right type of antennas, both in terms of frequency and direction.
2. Run the antenna cable from the racks to the intended location of each antenna. See your field engineering package and installation MOP for antenna cable specifics.

   NOTE: Ensure that the cable remains clear of any sources of potential interference, such as transmitting equipment or power lines.

3. Attach each antenna to your tower or building using the required mounting hardware.
4. Orient each antenna to the correct azimuth (direction) and tilt. See your field engineering package to determine the antenna's correct orientation.

   CAUTION: Failure to orient the antennas according to the specifications listed in the installation MOP may seriously affect the performance of your wireless network.

5. Tighten and secure each antenna.
6. Connect the antenna to the RFSS module:
   - **i** Install each TMA within 3 m (10 feet) of its antenna. The TMAs should be installed as close to the antennas as possible in order to ensure optimal performance. Consult the documentation that ships with the TMA for the correct mounting procedures.
   - **ii** Connect the ANT port on each TMA to its antenna using a suitable coaxial cable. Torque each 7/16 DIN connector to 17 foot-pounds and ensure each connector is properly weatherproofed.

     CAUTION: Do not over-tighten connectors. Overtightening the connectors may damage the cable and degrade the RF signal.

   - **iii** Install each bias tee (also called a CIN) inside or outside the base station building, as specified in your field engineering package. Connect the ANT port on each bias tee to the BTS port on each TMA. Torque each 7/16 DIN connector to 17 foot-pounds and ensure each connector is properly weatherproofed.

     CAUTION: Do not over-tighten connectors. Overtightening the connectors may damage the cable and degrade the RF signal.

   - **iv** Connect the BTS port on each bias tee to the ANT port on each RFSS module. The ANT port is located on the rear side of the RFSS module.
   - **v** Connect the CIN port (also called Vout) on the rear side of the RFSS module to the DC port on the bias tee.

Measure VSWR and Return Loss

Voltage standing wave ratio (VSWR) is a ratio of the maximum to minimum voltage as measured along the length of a mismatched RF transmission line. VSWR indicates the level of impedance matching between RF equipment (such as amplifiers, cabling, and antennas). When the impedances of the RF equipment are mismatched, some of the RF energy is reflected back along the transmission line. Reflected energy causes inefficiencies in the transmission power output.

A VSWR of 1:1, as measured from antenna cable to the antenna, indicates that 100% of the power output is being radiated by the antenna. During a cable sweep, SOMA SoftAir RF equipment should show a VSWR of 1.5:1 or less in the supported spectrum. A VSWR greater than 1.5:1 indicates potential problems with the RF equipment.

A high VSWR may be caused by one or more of the following conditions:

- Moisture in the external cables or connectors
- Faulty equipment
- Poor connections between components
- Damaged cables or connectors
- An open- or short-circuit in RF equipment or cables

Return Loss

Return loss is closely related to VSWR. Return loss is a measure in decibels (dB) of the ratio of forward to reflected power. For example, if a load has a return loss of 10 dB, then 1/10 of the forward power is reflected. The higher the return loss, the less energy is being reflected.

Table 5.1 shows the correlation between VSWR, return loss, and the percentage of reflected power.

VSWR	Return Loss (dB)	Power Being Reflected (%)
1:1	N/A (infinite value)	0
1.25:1	19.1	1.2
1.5:1	14	4.0
1.75:1	11.3	7.4
2:1	9.5	11.1
5:1	3.5	44.7
N/A (infinite value)	0	100.0

Table 5.1 VSWR, Return Loss, and Reflected Power Conversions

To measure the VSWR of RF equipment

1. Power on and calibrate your cable sweep analyzer.
2. Power off the RFSS module connected to the RF equipment you want to test.

   See page 108 for a list of circuit breakers.

3 Carefully disconnect the RF equipment and cables you want to test.

WARNING: Extreme care must be taken when connecting or disconnecting the coaxial antenna cable to avoid damage to the center pins. Connectors should be torqued to a maximum of 17 foot-pounds and be free of dirt or moisture. Do not over-torque the connectors as this can damage the center pin and cause cable faults and other RF problems.

4 Connect the cable sweep analyzer to the equipment and cables you want to test.

NOTE: Be careful not to damage any cables or connectors when connecting the analyzer to the RF equipment.

Due to the use of the tower-mounted amplifier (TMA), all cable sweeps must measure the total length of the cable run (including all connectors, jumpers, and CIN), using a DIN adapter (female-female) in place of the TMA.

5 Perform the cable sweeps for your base station's supported spectrum, as listed in Table 5.2.

Model	Spectrum
PCS	1850–1990 MHz
MMDS	2500–2686 MHz
WCS	2305–2355 MHz

Table 5.2 Supported Base Station Spectrum

See the documentation that comes with your analyzer for information about performing the cable sweep and interpreting the results.

6 Record the results from the cable sweeps according to the methods and procedures of your site. Keeping records of periodic cable sweeps makes troubleshooting future problems easier.

7 Carefully disconnect the analyzer from the RF equipment.

8 Reconnect the RF equipment and cables back to the RFSS module.

9 If any of the connectors are outdoors, ensure that they are resealed according to the procedures of your site.

10 Reconnect the RF equipment to the RFSS module.

11 Power on the RFSS module. See page 108 for a list of circuit breakers.

Measure the Distance to a Fault

Distance-to-fault (DTF) is a measurement of VSWR or return loss based on distance. A DTF test indicates the distance to a short, open, or load. Perform a DTF test whenever a VSWR test reveals that the antenna system is not operating within specifications.

To accurately interpret the results from a DTF cable sweep, you need to know the lengths of your cables and the location of any devices or connectors attached to those cables. Comparing the results of the test with the layout of your antenna system will help you to determine if problems are caused by faulty devices, connectors, or cables.

To measure the distance to fault

1. Power on and calibrate your cable sweep analyzer.
2. Power off the RFSS module connected to the RF equipment you want to test. See page 108 for a list of circuit breakers.
3. Carefully disconnect the RF equipment and cables you want to test.
4. Connect the cable sweep analyzer to the equipment and cables you want to test.

   NOTE: Be careful not to damage any cables or connectors when connecting the analyzer to the RF equipment.

5. Perform the cable sweeps.

   See the documentation that comes with your analyzer for information about performing the cable sweep and interpreting the results.
6. Document the results from the cable sweeps according to the MOPs of your site. Keeping records of periodic cable sweeps will make troubleshooting future problems easier.
7. Carefully disconnect the analyzer from the RF equipment.
8. Reconnect the RF equipment and cables back to the RFSS module.

   If any of the connectors are outdoors, ensure that they are resealed according to the procedures of your site.
9. Power on the RFSS module. See page 108 for a list of circuit breakers.

Chapter 6

ON-SITE CONFIGURATION PROCEDURES

This chapter describes how to power on the base station and configure the cards.

Contents

Configure GPS Clock Module 104
Configure the Ethernet Switches 107
Post-Installation Activities 110

Power On the Base Station

The power for the base station is controlled by circuit breakers in the PDP, located at the top of each rack. Each power supply, RFSS module, cooling unit, and GPS clock module has its own circuit breaker, which means it can be powered on and off independently of the other devices.

To power on the base station

1. Ensure that your main DC power supply is powered on and is providing a power source that meets the electrical requirements listed on 23.
2. Power on the upper and lower cooling units. On each rack, set breakers CB 01 and CB 14 to the ON (up) position.

   The fans will start turning. If the fans do not start, ensure that the SGNL port on each cooling unit is connected to the alarm wiring card. The fans will turn only when the alarm cable is present.
3. Power on each power supply in the utility and radio shelves separately.

   NOTE: The red OUTPUT FAIL light on each power supply turns off within 3 s. If the OUTPUT FAIL light remains on or flickers continuously, power down the shelf immediately and replace the power supply.

   Table 6.1 shows the circuit breakers for each power supply.

Power Supply	Circuit Breaker
Radio shelf 0, PS0 (slots 0–1)	Radio rack PDP, CB 02
Radio shelf 0, PS1 (slots 2–3)	Radio rack PDP, CB 03
Radio shelf 0, PS2 (slots 4–5)	Radio rack PDP, CB 04
Radio shelf 1, PS0 (slots 0–1)	Radio rack PDP, CB 05
Radio shelf 1, PS1 (slots 2–3)	Radio rack PDP, CB 06
Radio shelf 1, PS2 (slots 4–5)	Radio rack PDP, CB 07
Radio shelf 2, PS0 (slots 0–1)	Radio rack PDP, CB 08
Radio shelf 2, PS1 (slots 2–3)	Radio rack PDP, CB 09
Radio shelf 2, PS2 (slots 4–5)	Radio rack PDP, CB 10
Utility shelf, PS0 (slots 0–1)	Radio rack PDP, CB 11
Utility shelf, PS1 (slots 2–3)	Radio rack PDP, CB 12
Utility shelf, PS2 (slots 4–5)	Radio rack PDP, CB 13

Table 6.1 Utility and Radio Shelf Power Supply Circuit Breaker Summary

4. Power on the GPS clock module, if present, by setting CB 15 to the ON (up) position.

   The GPS clock module will perform its internal diagnostics and begin to acquire and track satellites. It may take up to 30 min for the GPS receivers to acquire a rough position and time. The accuracy of the receivers improves as the satellites are tracked.

   See *AccuSync-R GPS Synchronized Time and Frequency Instrument User's Manual (377-8006),* available from Zyfer Inc., for information about the GPS clock module.
5. Power on each RFSS module in the RF rack separately. Table 6.2 shows the circuit breakers for the RFSS modules.

RFSS Module	Circuit Breaker
RF shelf 0, RFSS module 0	RF rack PDP, CB 02
RF shelf 0, RFSS module 1	RF rack PDP, CB 03
RF shelf 0, RFSS module 2	RF rack PDP, CB 04
RF shelf 0, RFSS module 3	RF rack PDP, CB 05
RF shelf 1, RFSS module 0	RF rack PDP, CB 06
RF shelf 1, RFSS module 1	RF rack PDP, CB 07
RF shelf 1, RFSS module 2	RF rack PDP, CB 08
RF shelf 1, RFSS module 3	RF rack PDP, CB 09
RF shelf 2, RFSS module 0	RF rack PDP, CB 10
RF shelf 2, RFSS module 1	RF rack PDP, CB 11
RF shelf 2, RFSS module 2	RF rack PDP, CB 12
RF shelf 2, RFSS module 3	RF rack PDP, CB 13

Table 6.2 RFSS Module Circuit Breaker Summary

If the base station has already been configured in the CM tool software, the base station will automatically start its call processing and enable the air interface. Any SOMAports powered on within the supported sectors will acquire the base station and establish a connection.

If the base station has not been configured in the CM tool software, the red error lights on the PDPs and the RFSS modules will light up. The base station will not enable the air interface.

Configure GPS Clock Module

Base stations configured for +24V operation require a GPS clock module for synchronization purposes over the air interface. To ensure correct operation of the GPS clock module, you need to perform the following configurations:

- Set compensation for antenna cable delay
- Select automatic determination of antenna position
- Select UTC as a time reference
- Verify GPS clock module has acquired

To configure the GPS clock module, you need to log in to the module over a serial connection. Figure 6.1 shows the wiring and connections for the custom adapter.

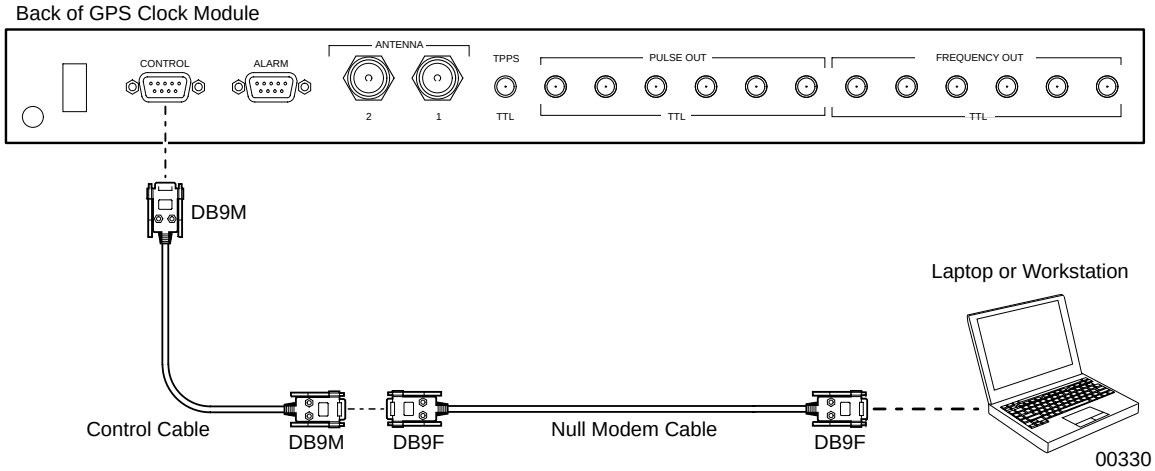

Figure 6.1 GPS Serial Interface Adapter

NOTE: See the *Zyfer AccuSync-R GPS Synchronized Time and Frequency Instrument User's Manual* for information about cabling and issuing commands over a serial interface.

NOTE: Base stations configured for –48V operation do not require a GPS clock module.

To configure the GPS clock module

1 Connect a laptop to the GPS clock, as shown in Figure 6.1.

> **NOTE:** The control cable is the cable that connects the GPS clock module to the GPS CNTL port on the alarm card.

2 Start a serial terminal session using the settings shown in Table 6.3.

Parameter	Setting
Baud	9600 bits/s
Data bits	8
Parity	None
Stop bits	1
Flow control	None
ASCII setup	Send linefeeds, local character echo on

Table 6.3 GPS Clock Module Serial Port Settings

> **NOTE:** Depending on your communications software, you may need to append a linefeed to each issued command (in addition to the pressing Enter). In Minicom on Linux, use Control+J. For example: `$SSTA* <ENTER> <CTRL-J>`.

3 Set the compensation for the antenna cable delay:

i Calculate the cable delay by multiplying the total cable length by the delay value. For example, if the delay value of the cable is 4.36 ns/m and there is 15 m of cable, then the cable delay would be 15 m x 4.36 ns/m = 65.4 ns. Round the result to the nearest nanosecond. In this case, the result would be 65 ns.

ii Set the cable delay for the first GPS plug-in module. This example uses a cable delay of 65 ns. Replace the 65 in the following command with your own calculated cable delay value:

```
$ANT1,65* ↵
```

iii Set the cable delay for the second GPS plug-in module. Again, replace the 65 in the following command with your own calculated cable delay value:

```
$ANT2,65* ↵
```

The GPS clock module briefly enters coasting mode as it recalculates its position.

4 Set the automatic determination of antenna position for each module:

```
$PMD1,S* ↵
$PMD2,S* ↵
```

The GPS clock module enters Survey module and recalculates its position.

5 Configure the GPS output to be expressed in UTC time:

```
$TIMM,1* ↵
$TIMM,2* ↵
```

The GPS clock module is now configured.

NOTE: It may take several hours for the GPS clock module to determine its position. To check if step 4 was completed correctly, issue the following commands:

```
$PMD1* ↵
$PMD2* ↵
```

If the GPS clock module has determined its position, the following output appears:

```
$PMD1,K
$PMD2,K
```

If the GPS clock module has not yet determined its position, the following output appears:

```
$PMD1,S
$PMD2,S
```

Configure the Ethernet Switches

In order to operate in the base station, the Ethernet switches require custom settings. You need to configure the Ethernet switches only once; the configuration is stored in the switch's nonvolatile memory.

You can connect to the Ethernet switch by connecting a custom serial cable with a null modem adapter to the console port located on the front panel.

Figure 6.2 shows the connections for the Ethernet switch serial cable.

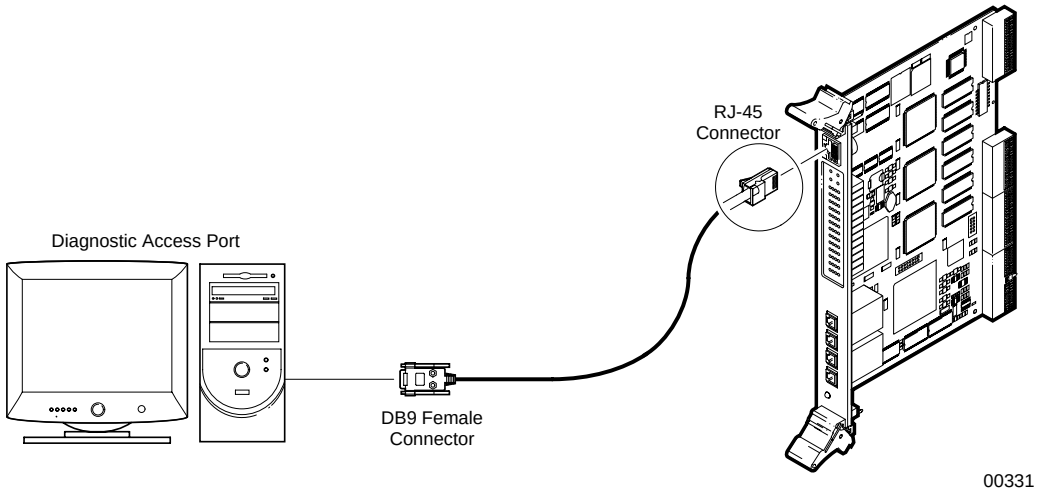

Figure 6.2 Ethernet Switch Serial Cable

Table 6.4 shows the pin assignments for the RJ-45 serial connector.

RJ-11 Pin Number	Signal Name	DCE DB-9 Connector Number Equivalent	DCE DB-9 Connector Number Equivalent
1	—	—	—
2	GND	5	5
3	RX	3	2
4	TX	2	3
5	GND		
6	—	—	—

Table 6.4 Ethernet Switch RJ-45 Serial Connector Pin Assignments

To configure the Ethernet switches

1 Establish a serial connection with the Ethernet switch:

   i Connect a PC to the Ethernet switch using the supplied RJ-11 to DB-9 serial cable with a null modem adapter. See Table 6.4 for pin assignments.

   ii Start a serial terminal session using the settings shown in Table 6.5.

Parameter	Setting
Baud	9600 bits/s
Data bits	8
Parity	None
Stop bits	1
Flow control	None

Table 6.5 Ethernet Switch Serial Port Settings

2 Log in to the Ethernet switch.

3 Restore the default settings for the Ethernet switch by typing:

```
switch defaults ↵
```

The Ethernet switch reboots.

4 Log in to the Ethernet switch.

5 Configure the switch by typing:

```
port config 1-4 off 100 full false ↵
port config 5-22 off 100 half false ↵
span port enable 1-26 on ↵
span port fast 5-24 on↵
bootp enable off↵
dhcp server enable off ↵
dhcp client enable sw0 off ↵
cos queuing algorithm strict ↵
cos queuing map 0 0 ↵
cos queuing map 1 0↵
cos queuing map 2 0 ↵
cos queuing map 3 0↵
cos queuing map 4 1 ↵
cos queuing map 5 2↵
cos queuing map 6 3 ↵
cos queuing map 7 3↵
gvrp enable off↵
ip config sw0 switch_ip_address 255.255.255.192 1↵
ip gateway router0-0_ip_address ↵
ip forward off
tftpd sessions 0↵
```

where:

switch_ip_address is the IP address of the Ethernet switch you are configuring
router0-0_ip_address is the IP address of the primary router

6 Change the default password:

   i Type:

password ↵

ii Enter the old password.

iii Enter the new password.

7 Save the configuration by typing:

save ↵
save ↵
save ↵

8 Repeat steps 1 to 7 for the other Ethernet switch.

Post-Installation Activities

After the installation of the base station is complete, the base station needs to be provisioned in order to make the base station fully functional. See the *Macro Base Station Provisioning Procedures* for the following information:

- Adding the base station to the network
- Installing new software loads
- Configuring base station settings

Appendix A

DECOMMISSIONING PROCEDURES

This appendix describes how to safely take an base station out of service.

Contents

Decommission a Basestation 112

Decommission a Basestation

Decommissioning occurs whenever a base station is taken out of service or moved to a new location.

WARNING: Ensure that the necessary requirements and procedures have been reviewed prior to the start of any power-related activity. Refer to your power cut-over MOP for procedures specific to your site.

To decommission a base station

1. Shutdown the radio sector controllers:
   - **i** Establish an SSH session with each card, as described in the *SOMA SoftAir System Administration Reference.*
   - **ii** Shutdown each card by typing:

     `shutdown now` ↵
2. Shutdown the application hosts using the procedure described in step 1.
3. Shutdown the standby utility bus controller using the procedure described in step 1.

   A utility bus controller is in standby mode when the USR2 status light is off.
4. Shutdown the active utility bus controller using the procedure described in step 1.

   A utility bus controller is in active mode when the USR2 status light is green.
5. Power off the base station by setting CB01 through CB14 to the OFF (down) position.
6. Power off the main power supply for the base station. With most power bays, circuit breakers control the three +24V DC feeds to each rack. Ensure that the main power is removed for both the radio and RF racks.

   See the documentation that accompanies your main power supply for specific instructions on powering off the +24V DC feeds to the base station.

   After the main power supply is powered off, it is safe to prepare the racks for shipment or storage.
7. Package the racks according to the procedures specific to your site. If you remove the cards from their shelves, ensure that the cards are stored in antistatic packaging and that the required documentation is included.

Appendix B

ADDING ADDITIONAL SECTORS

This appendix describes how to add additional sectors to an base station to increase capacity.

Contents

Pre-Upgrade Preparation 114
Adding Sectors to a Base Station 116
Performing the Cutover and Power-On 117
Acceptance Test Plan for Base Station Upgrade 118

Pre-Upgrade Preparation

Before you begin upgrading the base station, ensure that the following preparations are performed. These preparations are intended to minimize the interruption of service.

Site-Specific Documentation

Before upgrading the base station, ensure that the documentation described in Table B.1 is updated, reviewed, and verified.

Document	Description
Field engineering package	Provides site-specific configuration about the base station, such as antenna orientation, cabling requirements, and inventory
Method of Procedure (MOP) for adding sectors	Describes the sequence and timing of procedures required for the upgrade
Site-specific fall-back plan	Describes any events or triggers that require that the technicians return the base station to its original configuration.

Table B.1 Sector Upgrade Documentation Requirements

RF Planning

RF planners should develop a preliminary RF plot of the new sector configuration that accounts for the location of existing and future users. A change in antenna sector layout may affect the RF planning for the entire network.

After the RF plot is finalized, it should be added to the field deployment package.

Install Additional Antennas and Cabling

Install the new antennas and associated cabling. Each new sector requires two antennas (main and diversity). See "Install the Main and Diversity Antennas" on page 94 for information.

After installing the antennas and cabling, perform a cable sweep on each and ensure results are within specifications.

HVAC Requirements

Ensure that the heating, ventilation, and air-conditioning (HVAC) system for the site has the capacity to handle the additional heat produced by the additional sectors. See "Heat Output" on page 22 for information.

Main and Backup Power Supplies

Ensure that the power supplies for the site have the capacity to handle the additional sectors. See "Electrical Requirements" on page 23 for information. Additional rectifier modules must be installed and tested prior to upgrading.

Backhaul Capacity

Verify that the backhaul connecting the base station to the network core has the capacity to handle the additional traffic.

Edge and Core Router Capacity

If the backhaul is upgraded, the edge and core routers may require changes to their physical interface cards (PIC). Any changes must be implemented and tested prior to upgrading.

Adding Sectors to a Base Station

This procedure describes how to add additional sectors to a base station. See your updated field engineering package for site-specific information about the upgrade.

To add sectors to a base station

1. Install any additional radio shelves. See "Attach the Radio Shelves to the Radio Rack" on page 62.
2. Install any additional CompactPCI power supplies for the radio shelves. See "Insert CompactPCI Power Supplies" on page 73.
3. Install the additional cards. See "Insert the Radio and Utility Shelf Cards" on page 75.
4. Cover any unused card slots with filler panels. See "Cover Unused Card Slots" on page 77.
5. Install the additional RFSS modules. See "Install the RFSS Modules" on page 66.
6. Cover any unused RFSS module slots with filler panels. See "Cover Empty RFSS Slots" on page 67.
7. Install the power, Ethernet, signal, clock, and RF cabling for the new sectors. See "Connecting the Cables" on page 78.
8. Set the PDP sector switch to the number of sectors that the upgraded base station will support. See "Check PDP Sector Configuration" on page 54.
9. Perform a quality audit on the base station hardware as described in the field deployment (E1) package.
10. Review the condition of the status lights to ensure correct operation. See the *Macro Base Station Maintenance Procedures* for information.
11. Add the new sectors to the base station network in the CM tool. See the *System Administration Reference* for information.

Performing the Cutover and Power-On

Switching to the new antenna configuration will result in a service interruption. The cutover should occur during a scheduled maintenance window.

CAUTION: Before performing this procedure, ensure that a quality audit has been performed on the system, as described in "Adding Sectors to a Base Station" on page 116.

This procedure will cause a service interruption. During this procedure, all SOMAports in the affected sectors will be forced to reacquire.

Estimated time of service interruption: 10 min
Estimated time to completion: 30 min

To perform the cutover and power-on

1. Power off the RFSS modules. See "Power On the Basestation" on page 108 for information about RFSS module circuit breakers.
2. Disconnect the antenna cables from the old antennas.
3. Connect the new antennas.
4. Power on the RFSS modules.
5. Perform the acceptance test plan (ATP) to ensure correct operation and functionality. See "Acceptance Test Plan for Base Station Upgrade" on page 118 for information.

Acceptance Test Plan for Base Station Upgrade

After completing the upgrade, review the Acceptance Test Plan (ATP) to verify the functionality and performance of the new configuration.

Site Coverage Verification

Immediately after performing the cutover and quality audit, verify the RF site coverage to identify possible problems with the antenna subsystem, such as antenna radiation patterns, azimuth, tilt, or cabling errors.

Coverage verification includes performing a drive test on non-service-affecting channels, such as the pilot channel (PICH). Service interrupt may be required if adjustments to the antenna subsystem are required.

Voice and Data Functionality and Performance

The ATP should include procedures that test the functionality and performance of the voice and data services.

RF Network Coverage Optimization

RF network coverage optimization should be performed after the upgrade is completed for all planned sites within the market area in order to secure high service quality and subscriber satisfaction.

Network optimization typically requires:

- Monitoring network statistics to identify areas or users with service quality degradation
- Drive testing (pilot channel scan) to identify areas with coverage problems

Collected data should be analyzed and, if necessary, appropriate site configuration changes implemented (such as antenna orientation, down tilt, base station power setting, individual channel power allocation, or parameter tuning).

In situations where a configuration change for a large number of sites is planned, sector upgrades should occur in several phases. The entire network should be divided in clusters of sites and sectorization performed for each cluster individually. Coverage optimization should be performed for each cluster after sectorization is completed. Network wide optimization will be performed after entire network is reconfigured.

LIST OF ABBREVIATIONS

AH – application host

AWG – American wire gauge

BTU – British thermal unit

CFM – cubic feet per minute

CSU – customer service unit

dB – decibel

DIV – diversity

ES – Ethernet switch

GPS – Global Positioning System

HVAC – heating, ventilation, air-conditioning

IP – Internet Protocol

modem – modulator–demodulator

MOP – methods of procedure

NC – not connected

NEBS – network equipment-building system

NOC – network operations center

OAMP – operations, administration, maintenance, and provisioning

PDP – power distribution panel

PIC – physical interface card

RF – radio frequency

RFSS – radio frequency subsystem

RS – radio shelf

RSC – radio sector controller

RX – receive

SCP – Secure Copy

SSH – Secure Shell

TX – transmit

UBC – utility bus controller

UTC – universal time code

VSWR – voltage standing wave ratio

WCS – wireless communications services

INDEX

A

adapter
  GPS serial interface, **104**
airflow requirements, 22
  for cards, 77
  for occupied radio bays, 63
alarm cables
  connecting, 85
alarm cards
  location, 69
aligning racks. *See* racks
altitude requirements, 21
anchor bolts, 49
  securing racks with, 51–52
antennas, 31
  distance-to-fault, 99
  installing
    GPS, 92–93
    main and diversity, 94–96
  return loss, 97
  VSWR, 97
antistatic. *See* electrostatic discharges
attaching
  cables to power supplies, 57–58
  radio shelves
    to radio rack, 62
  utility shelves to radio rack, 64
  See also covering
  See also inserting
  See also installing

B

backhaul circuits, 29
base station
  dimensions, **18**
  ground cables, 55
  heat output, 22
  in seismic zones, 22
  installation process summary, 14
  mounting, 30
  power source, 26
  powering on, 102
  weight and floor loading, 19
base station racks. *See* racks
base stations
  components. *See* components
bases tation
  preparing installation location, 49
bill of materials, 40
bolt hole locations, **51**

C

cable sweep generator, **39**
cable sweeps
  interpreting results from a DTF, 99
  performing, 98
cables
  alarm, 85
  Ethernet, 86
  for grounding racks, 55
  GPS clock module, 87
  PDP power, 57–58, 79
  RF, 88
  RFSS signal, 83
  setting delay for clock module, 105
  site requirements for, 31
  testing integrity and type of, **39**
  trough location in radio rack, **60**
  See also connecting cables
cards
  configuring, 42
    controllers, 45–46
    Ethernet switches, 43
  covering empty slots, 77
  IF/RF, **88**
  inserting into shelves, 75
  radio shelf, 71–72
  utility shelf, 69–70
checklists
  inventory, 41
  safety equipment, 38
  software, 39
  test equipment, 39
  tools, 38
circuit boards
  precautions when handling, 37

circuit breakers, 53, 102
in radio and utility shelves, 74, 102
in RFSS modules, 103
maximum loading in PDP, 25
clock module. *See* GPS clock module
CompactPCI cards. *See* cards
CompactPCI power supplies. *See* power supplies
components
electrostatic damage prevention, 37
location in racks, **60–61**
powering off, 25
powering on, 102, 103
weight, 19
compression lugs, **55**
configuring
controller cards, 45–46
Ethernet switches, 43
customizing settings, 108
connecting cables, 78
Ethernet, 86
for grounding racks, 55–56
GPS clock module, 87
PDP power, 57–58, 80–82
RF, 89
RFSS signal, 84
to alarm cards, 85
connections
edge router to base station, 29
Ethernet switch serial cable, **107**
for main power source, 23
connectors
maximum torque for, 98
power supply, 79–80
RF, **88**
RFSS signal, 83
size and torque values, **20**
See also connecting cables
cooling system
airflow, 22
location in radio rack, **60**
powering on, 102
weight, **19**
covering
empty radio bays, 63
unused cards slots, 77
unused RFSS slots, 67

D

digital multimeter, **39**
dimensions
base station, **18**
rack, 18
distance-to-fault. *See* DTF
diversity antenna, 31
installing, 94–96
RFSS configuration, 95
DTF, 99

E

edge routers, 29
electrical requirements
for grounding racks, 27, 28
power supplies, 23
electrostatic discharges, 37
from card components, 75
from power supplies, 73
Ensure, 57
environmental requirements
airflow, 22
altitude, 21
humidity, 21
in seismic zones, 22
temperature, 21
equipment
checking inventory, 41
for installation, 38
for safety, 38
for testing functionality, 39
reporting damaged parts, 76
unpacking, 40
Ethernet cables, 86
connecting, 86
Ethernet switches
configuring, 43, 107
connecting, 86
jumper configuration, **44**
jumper settings, **43**
location, 69
parameter settings, **108**
serial cable connections, **107**
expansion bolts. *See* anchor bolts

F

fans. *See* cooling system
fasteners
size and torque values, 20
filler panels
location in rack, 61
to cover empty card slots, 77
to cover empty RFSS slots, 67

G

gateways
PSTN, 29
global positioning system clock. *See* GPS clock module
GPS antennas, 87
assembly, **92**
installing, 92
GPS clock module
antennas. *See* GPS antennas
cable delay, 105
connecting cables, 87
installing, 65
location in radio rack, **60**
optimizing operation of, ??–105
parameter settings, **105**

powering on, 102
timing signals, 87
ground cables, 55
See also cables
ground terminals, **56**
grounding
racks, 55–56
requirements for, 27, 28
wrist straps, 37

H

hard disk drives
location, 69
humidity requirements, 21

I

IF/RF cards, **88**
location, 71
inserting
cards into shelves, 75
power supplies into shelves, 73
RFSS modules into RF rack, 66
See also attaching *and* installing
installing
antennas
GPS, 92–93
main and diversity, 94–96
GPS clock module, 65
racks, 48
positioning and aligning, 50
preparing location, 49
securing, 51–52
See also attaching *and* inserting
inventory checking. *See* checklists

J

jumpers
configuration, **44**
settings, **43**
junction bar location, **51**

M

main antenna, 31
installing, 94–96
RFSS configuration, 95
measuring
distance to a fault, 99
VSWR of RF equipment, 97–98
modem cards
location, 71

N

network
conditions assumed, 15
requirements
backhaul circuits, 29
PSTN gateway, 29
routers, 29
nuts. *See* fasteners

O

operation
of GPS clock module, ??–105

P

parameter settings
Ethernet switch, **108**
GPS clock module, **105**
part numbers
cables
PDP power, 80–82
cards, 69–72
PDP
circuit breakers, 25
grounding point for wrist straps, 37
power cables. *See* power cables
rear cover attachment, 53
weight, **19**
physical requirements
for moving base stations, 19
space, 18
positioning racks. *See* racks
power cables, 79
connecting, 57–58, 80–82
power distribution panel. *See* PDP
power source
base station, 26
circuit breakers, 27
grounding, 27
power supplies
connecting cables to, 57–58
connectors, 79–80
inserting into shelves, 73
powering on, 102
requirements, 23
testing, 74
powering off
components, 25
powering on
base station components, 102
precautions
against card or shelf damage, 68
during operation, 53
when attaching ground and power cables, 53
when attaching main and return cables, 57
when connecting alarm cables, 85
when handling cards, 75
when handling circuit boards, 37
when handling power supplies, 73
when handling shelves, 62
when testing power supplies, 74
preparing
installation location, 49
PSTN gateway, 29

R

racks
- component locations, **60–61**
- connector locations, 79–80, 83
- design for seismic zones, 22
- dimensions, 18
- fastener torque values, 20
- grounding, 55–56
  - requirements for, 27, 28
- installing, 48
  - filler shelves, 63
  - positioning and aligning, 50
  - preparing location, 49
  - radio shelves, 62
  - RFSS modules, 66
  - securing, 51–52
  - utility shelves, 64
- PDP circuit breaker loading, 25
- unpacking, 40
- weight, **19**

radio bays. *See* radio rack
radio rack, 60
- connector locations, 79
- covering empty bays, 63
- installing
  - radio shelves, 62
  - utility shelves, 64
- weight, **19**
- *See also* racks

radio sector controllers
- configuring, 45–??
- location, 71

radio shelves
- attaching to radio rack, 62
- cards, 71–72
  - inserting, 75
- circuit breakers, 74, 102
- location in radio rack, **60**
- weight, **19**

return loss, 97
RF
- equipment
  - measuring VSWR, 97–98
  - reflected energy, 97

RF cables, 88
- connecting, 89

RF rack, 61
- connector locations, 79–80
- inserting RFSS modules into, 66
- weight, **19**
- *See also* racks

RFSS filler panels. *See* filler panels
RFSS modules, **88**
- antenna configuration, 95
- circuit breakers, 103
- connecting antennas to, 94–96
- inserting into RF rack, 66
- location in RF rack, 61
- powering on, 102, 103
- weight, **19**

RFSS signal cables. *See* signal cables
RFSS slots. *See* filler panels
routers, 29

S

safety equipment, 38
screws
- size and torque value, **20**

sector controllers
- configuring, ??–46

securing racks. *See* racks
security, 30
settings
- configuration switch
  - controller card, **45**
- Ethernet switch, **108**
  - jumpers, **43**
- GPS clock module, **105**

signal cables, 83
- connecting, 84

site requirements
- AC outlets, 30
- access, 30
- antenna locations, 31
- building ground, 31
- fire protection, 30
- for cables, 31
- for equipment room and unloading area, 30
- for mounting base stations, 30
- lighting, 30

software
- for performing NPM maintenance, 39

space requirements, 18
spectrum analyzer, **39**
static electricity. *See* electrostatic discharges
Sunset OCx, **39**
supplies. *See* checklists
switch settings
- controller card, **45**
- Ethernet switch, 43
- *See also* Ethernet switches

T

temperature requirements, 21
testing
- cable integrity and type, **39**
- power supplies, 74
- recommended equipment, 39
- VSWR, 97

tools. *See* equipment
torque values, 20

U

unpacking equipment. *See* equipment
utility bus controllers
- configuring, 45–46

location, 69
utility shelves
attaching to radio rack, 64
cards, 69–70
inserting, 75
circuit breakers, 74, 102
location in radio rack, **60**
weight, **19**

V

verifying. *See* checklists
voltage standing wave ratio. *See* VSWR
VSWR, 97
measuring for RF equipment, 97–98

W

warnings
when connecting analyzer to RF equipment, 98
when connecting or disconnecting annenna cable, 98
warnings. *See* precautions
wires
connecting to main power source, 23
wrist straps, 37

Z

Zyfer GPS antennas. *See* GPS antennas