TCC
Nokia

FINAS
Finnish Accreditation Service
T117 (EN ISO/IEC 17025)

SAR Compliance Test Report

Test report no.:	Cph_SAR_0617_09	**Date of report:**	2006-04-27
Template version:	1.0	**Number of pages:**	44
Testing laboratory:	TCC Nokia Copenhagen Frederikskaj 1790 COPENHAGEN V DENMARK Tel. +45 33 292929 Fax. +45 33 292934	**Client:**	Nokia Corporation Lise Meitner Strasse 10 89081 ULM GERMANY Tel. +49 731 1754 0 Fax. +49 731 1754 6800
Responsible test engineer:	Leif Funch Klysner	**Product contact person:**	Jussi Visuri
Measurements made by:	Jesper Nielsen		
Tested device:	RM-167		
FCC ID:	PPIRM-167	**IC:**	661U-RM167
Supplement reports:	-		

Testing has been carried out in accordance with:

47CFR §2.1093
Radiofrequency Radiation Exposure Evaluation: Portable Devices

FCC OET Bulletin 65 (Edition 97-01), Supplement C (Edition 01-01)
Evaluating Compliance with FCC Guidelines for Human Exposure to Radiofrequency Electromagnetic Fields

RSS-102
Evaluation Procedure for Mobile and Portable Radio Transmitters with Respect to Health Canada's Safety Code 6 for Exposure of Humans to Radio Frequency Fields

IEEE 1528 - 2003
IEEE Recommended Practice for Determining the Peak Spatial-Average Specific Absorption Rate (SAR) in the Human Head from Wireless Communications Devices: Measurement Techniques

Documentation:
The documentation of the testing performed on the tested devices is archived for 15 years at TCC Nokia.

Test results:
The tested device complies with the requirements in respect of all parameters subject to the test. The test results and statements relate only to the items tested. The test report shall not be reproduced except in full, without written approval of the laboratory.

Date and signatures:

For the contents:

Leif Funch Klysner
Test System Manager

Digitally signed by Leif Funch Klysner
DN: cn=Leif Funch Klysner, c=DK, o=Radio Spectrum, ou=CertT, email=leif.klysner@nokia.com
Reason: I am approving this document
Date: 2006.05.09 09:15:59 +02'00'

Copyright © 2006 TCC Nokia

CONTENTS

1. SUMMARY OF SAR TEST REPORT 3

1.1 TEST DETAILS 3
1.2 MAXIMUM RESULTS 3
1.2.1 Head Configuration 3
1.2.2 Body Worn Configuration 3
1.2.3 Maximum Drift 4
1.2.4 Measurement Uncertainty 4

2. DESCRIPTION OF THE DEVICE UNDER TEST 4

2.1 PICTURE OF THE DEVICE 5
2.2 DESCRIPTION OF THE ANTENNA 5

3. TEST CONDITIONS 5

3.1 TEMPERATURE AND HUMIDITY 5
3.2 TEST SIGNAL, FREQUENCIES AND OUTPUT POWER 5

4. DESCRIPTION OF THE TEST EQUIPMENT 6

4.1 MEASUREMENT SYSTEM AND COMPONENTS 6
4.1.1 Isotropic E-field Probe Type ET3DV6 7
4.2 PHANTOMS 7
4.3 TISSUE SIMULANTS 7
4.3.1 Tissue Simulant Recipes 8
4.3.2 System Checking 8
4.3.3 Tissue Simulants used in the Measurements 10

5. DESCRIPTION OF THE TEST PROCEDURE 11

5.1 DEVICE HOLDER 11
5.2 TEST POSITIONS 11
5.2.1 Against Phantom Head 11
5.2.2 Body Worn Configuration 12
5.3 SCAN PROCEDURES 12
5.4 SAR AVERAGING METHODS 13

6. MEASUREMENT UNCERTAINTY 14

7. RESULTS 15

APPENDIX A: SYSTEM CHECKING SCANS 18

APPENDIX B: MEASUREMENT SCANS 24

APPENDIX C: RELEVANT PAGES FROM PROBE CALIBRATION REPORT(S) 43

APPENDIX D: RELEVANT PAGES FROM DIPOLE VALIDATION KIT REPORT(S) 44

Copyright © 2006 TCC Nokia

1. SUMMARY OF SAR TEST REPORT

1.1 Test Details

Period of test	2006-04-18 to 2006-04-25
SN, HW and SW numbers of tested device	SN: 004400/89/165220/6, HW: 2010, SW: Vpm05w07_06w09.1, DUT: 28180
Batteries used in testing	BL-5B, DUT: 28177, 28178, 28179
Headsets used in testing	HS-6, DUT: 28715
Other accessories used in testing	-
State of sample	Prototype unit
Notes	-

1.2 Maximum Results

The maximum measured SAR values for Head configuration and Body Worn configuration are given in section 1.2.1 and 1.2.2 respectively. The device conforms to the requirements of the standard(s) when the maximum measured SAR value is less than or equal to the limit.

1.2.1 Head Configuration

Mode	Ch / *f* (MHz)	Radiated power	Position	Measured SAR value (1g avg)	Scaled* SAR value (1g avg)	SAR limit (1g avg)	Result
GSM850	190/836.6	28.1 dBm	Left, Cheek	0.95 W/kg	**1.06 W/kg**	1.6 W/kg	PASSED
2-Slot GPRS1900	512/1850.2	30.2 dBm	Right, Cheek	0.53 W/kg	**0.59 W/kg**	1.6 W/kg	PASSED

1.2.2 Body Worn Configuration

Mode	Ch / *f* (MHz)	Radiated power	Separation distance	Measured SAR value (1g avg)	Scaled* SAR value (1g avg)	SAR limit (1g avg)	Result
2-Slot GPRS850	190/836.6	27.5 dBm	2.2 cm	0.38 W/kg	**0.43 W/kg**	1.6 W/kg	PASSED
2-Slot GPRS1900	512/1850.2	30.2 dBm	2.2 cm	0.41 W/kg	**0.46 W/kg**	1.6 W/kg	PASSED

*SAR values are scaled up by 12% to cover measurement drift.

Copyright © 2006 TCC Nokia

1.2.3 Maximum Drift

Maximum drift covered by 12% scaling up of the SAR values	Maximum drift during measurements
0.5dB	-0.22 dB

1.2.4 Measurement Uncertainty

Expanded Uncertainty (k=2) 95%	± 25.8%

2. DESCRIPTION OF THE DEVICE UNDER TEST

Device category	Portable
Exposure environment	General population / uncontrolled

Modes and Bands of Operation	GSM 850 / 1900	GPRS 850 / 1900	EGPRS 850 / 1900
Modulation Mode	GMSK	GMSK	GMSK / 8PSK
Duty Cycle	1/8	1/8 to 2/8	1/8 to 2/8
Transmitter Frequency Range (MHz)	824 - 849 1850 - 1910	824 - 849 1850 - 1910	824 - 849 1850 - 1910

Outside of USA and Canada, the transmitter of the device is capable of operating also in 1800 MHz band, which is not part of this filing.

This device has Push to Talk capability for use at the ear. Therefore, SAR for multi slot GPRS mode was evaluated against the head profile of the phantom.

Copyright © 2006 TCC Nokia

2.1 Picture of the Device

2.2 Description of the Antenna

The device has an internal foil antenna.

3. TEST CONDITIONS

3.1 Temperature and Humidity

Ambient temperature (°C):	20.5 to 22.5
Ambient humidity (RH %):	35 to 55

3.2 Test Signal, Frequencies and Output Power

The device was put into operation by using a call tester. Communication between the device and the call tester was established by air link.

The device output power was set to maximum power level for all tests; a fully charged battery was used for every test sequence.

In all operating bands the measurements were performed on lowest, middle and highest channels.

The radiated output power of the device was measured by a separate test laboratory on the same unit(s) as used for SAR testing.

Copyright © 2006 TCC Nokia

4. DESCRIPTION OF THE TEST EQUIPMENT

4.1 Measurement System and Components

The measurements were performed using an automated near-field scanning system, DASY4, manufactured by Schmid & Partner Engineering AG (SPEAG) in Switzerland. The SAR extrapolation algorithm used in all measurements was the 'advanced extrapolation' algorithm.

The following table lists calibration dates of SPEAG components:

Test Equipment	Serial Number	Calibration interval	Calibration expiry
DAE3	339	12 months	2006-08
DAE3	573	12 months	2006-09
E-field Probe ET3DV6	1808	12 months	2006-08
E-field Probe ET3DV6	1813	12 months	2006-09
Dipole Validation Kit, D835V2	476	24 months	2007-01
Dipole Validation Kit, D1900V2	5d063	24 months	2007-10
DASY4 software	Version 4.6	-	-

Additional test equipment used in testing:

Test Equipment	Model	Serial Number	Calibration interval	Calibration expiry
Signal Generator	SME06	848650/011	36 months	2008-07
Amplifier	ZHL-42W	E012903	-	-
Power Meter	NRP	100808	24 months	2008-03
Power Sensor	NRP-Z51	100412	12 months	2007-02
Call Tester	4400M	0411216	-	-
Call Tester	4400M	0211008	-	-
Vector Network Analyzer	AT8753ES	MY40001091	12 months	2006-08
Dielectric Probe Kit	HP85070B	US33020403	-	-

Copyright © 2006 TCC Nokia

4.1.1 Isotropic E-field Probe Type ET3DV6

Construction	Symmetrical design with triangular core Built-in optical fiber for surface detection system Built-in shielding against static charges PEEK enclosure material (resistant to organic solvents, e.g., butyl diglycol)
Calibration	Calibration certificate in Appendix C
Frequency	10 MHz to 3 GHz (dosimetry); Linearity: ± 0.2 dB (30 MHz to 3 GHz)
Optical Surface Detection	± 0.2 mm repeatability in air and clear liquids over diffuse reflecting surfaces
Directivity	± 0.2 dB in HSL (rotation around probe axis) ± 0.4 dB in HSL (rotation normal to probe axis)
Dynamic Range	5 µW/g to > 100 mW/g; Linearity: ± 0.2 dB
Dimensions	Overall length: 330 mm Tip length: 16 mm Body diameter: 12 mm Tip diameter: 6.8 mm Distance from probe tip to dipole centers: 2.7 mm
Application	General dosimetry up to 3 GHz Compliance tests of mobile phones Fast automatic scanning in arbitrary phantoms

4.2 Phantoms

The phantom used for all tests i.e. for both system checks and device testing, was the twin-headed "SAM Phantom", manufactured by SPEAG. The phantom conforms to the requirements of IEEE 1528 - 2003.

System checking was performed using the flat section, whilst Head SAR tests used the left and right head profile sections. Body SAR testing also used the flat section between the head profiles.

The SPEAG device holder (see Section 5.1) was used to position the device in all tests whilst a tripod was used to position the validation dipoles against the flat section of phantom.

4.3 Tissue Simulants

Recommended values for the dielectric parameters of the tissue simulants are given in IEEE 1528 - 2003 and FCC Supplement C to OET Bulletin 65. All tests were carried out using simulants

Copyright © 2006 TCC Nokia

whose dielectric parameters were within ± 5% of the recommended values. All tests were carried out within 24 hours of measuring the dielectric parameters.

The depth of the tissue simulant was 15.0 ± 0.5 cm measured from the ear reference point during system checking and device measurements.

4.3.1 Tissue Simulant Recipes

The following recipes were used for Head and Body tissue simulants:

800MHz band

Ingredient	Head (% by weight)	Body (% by weight)
Deionised Water	39.74	55.97
HEC	0.25	1.21
Sugar	58.31	41.76
Preservative	0.15	0.27
Salt	1.55	0.79

1900MHz band

Ingredient	Head (% by weight)	Body (% by weight)
Deionised Water	54.88	69.02
Butyl Diglycol	44.91	30.76
Salt	0.21	0.22

4.3.2 System Checking

The manufacturer calibrates the probes annually. Dielectric parameters of the tissue simulants were measured every day using the dielectric probe kit and the network analyser. A system check measurement was made following the determination of the dielectric parameters of the simulant, using the dipole validation kit. A power level of 250 mW was supplied to the dipole antenna, which was placed under the flat section of the twin SAM phantom. The system checking results (dielectric parameters and SAR values) are given in the table below.

Copyright © 2006 TCC Nokia

System checking, head tissue simulant

f [MHz]	Description	SAR [W/kg], 1g	Dielectric Parameters		Temp [°C]
			ε_r	σ [S/m]	
835	Reference result	2.27	42.0	0.91	
	± 10% window	2.04 – 2.50			
	2006-04-19	2.42	40.4	0.89	22.0
	2006-05-03	2.26	41.8	0.90	22.0
1900	Reference result	10.3	38.6	1.48	
	± 10% window	9.3 - 11.3			
	2006-04-25	9.53	39.6	1.47	21.9

System checking, body tissue simulant

f [MHz]	Description	SAR [W/kg], 1g	Dielectric Parameters		Temp [°C]
			ε_r	σ [S/m]	
835	Reference result	2.47	54.9	1.01	
	± 10% window	2.22 – 2.72			
	2006-04-18	2.41	53.6	0.97	21.6
1900	Reference result	10.5	53.0	1.53	
	± 10% window	9.4 - 11.6			
	2006-04-24	10.3	54.7	1.58	21.4

Plots of the system checking scans are given in Appendix A.

Copyright © 2006 TCC Nokia

4.3.3 Tissue Simulants used in the Measurements

Head tissue simulant measurements

f [MHz]	Description	Dielectric Parameters		Temp [°C]
		ε_r	σ [S/m]	
836	Recommended value	41.5	0.90	
	± 5% window	39.4 – 43.6	0.86 – 0.95	
	2006-04-19	40.4	0.89	22.0
	2006-05-03	41.8	0.91	22.0
1880	Recommended value	40.0	1.40	
	± 5% window	38.0 – 42.0	1.33 – 1.47	
	2006-04-25	39.7	1.45	21.9

Body tissue simulant measurements

f [MHz]	Description	Dielectric Parameters		Temp [°C]
		ε_r	σ [S/m]	
836	Recommended value	55.2	0.97	
	± 5% window	52.4 – 58.0	0.92 – 1.02	
	2006-04-18	53.6	0.97	21.6
1880	Recommended value	53.3	1.52	
	± 5% window	50.6 – 56.0	1.44 – 1.60	
	2006-04-24	54.8	1.55	21.4

Copyright © 2006 TCC Nokia

5. DESCRIPTION OF THE TEST PROCEDURE

5.1 Device Holder

The device was placed in the device holder (illustrated below) that is supplied by SPEAG as an integral part of the Dasy system.

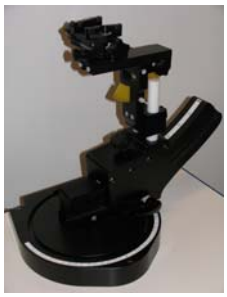

Device holder supplied by SPEAG

A Nokia designed spacer (illustrated below) was used to position the device within the SPEAG holder. The spacer positions the device so that the holder has minimal effect on the test results but still holds the device securely. The spacer was removed before the tests.

Nokia spacer

5.2 Test Positions

5.2.1 Against Phantom Head

Measurements were made in “cheek” and “tilt” positions on both the left hand and right hand sides of the phantom.

The positions used in the measurements were according to IEEE 1528 - 2003 "IEEE Recommended Practice for Determining the Peak Spatial-Average Specific Absorption Rate (SAR) in the Human Head from Wireless Communications Devices: Measurement Techniques".

Copyright © 2006 TCC Nokia

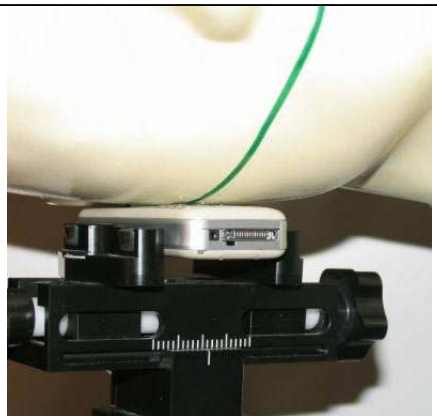

Photo of the device in “cheek” position

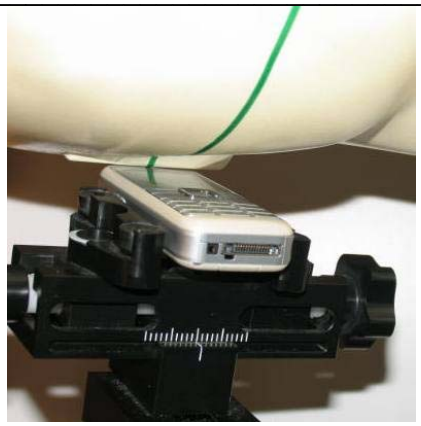

Photo of the device in “tilt” position

5.2.2 Body Worn Configuration

The device was placed in the SPEAG holder using the Nokia spacer and placed below the flat section of the phantom. The distance between the device and the phantom was kept at the separation distance indicated in the photo below using a separate flat spacer that was removed before the start of the measurements. The device was oriented with its antenna facing the phantom since this orientation gives higher results.

Photo of the device positioned for Body SAR measurement.
The spacer was removed for the tests.

5.3 Scan Procedures

First, area scans were used for determination of the field distribution. Next, a zoom scan, a minimum of 5x5x7 points covering a volume of at least 30x30x30mm, was performed around the highest E-field value to determine the averaged SAR value. Drift was determined by measuring the same point at the start of the area scan and again at the end of the zoom scan.

Copyright © 2006 TCC Nokia

5.4 SAR Averaging Methods

The maximum SAR value was averaged over a cube of tissue using interpolation and extrapolation.

The interpolation, extrapolation and maximum search routines within Dasy4 are all based on the modified Quadratic Shepard's method (Robert J. Renka, "Multivariate Interpolation Of Large Sets Of Scattered Data", University of North Texas ACM Transactions on Mathematical Software, vol. 14, no. 2, June 1988, pp. 139-148).

The interpolation scheme combines a least-square fitted function method with a weighted average method. A trivariate 3-D / bivariate 2-D quadratic function is computed for each measurement point and fitted to neighbouring points by a least-square method. For the zoom scan, inverse distance weighting is incorporated to fit distant points more accurately. The interpolating function is finally calculated as a weighted average of the quadratics.

In the zoom scan, the interpolation function is used to extrapolate the Peak SAR from the deepest measurement points to the inner surface of the phantom.

Copyright © 2006 TCC Nokia

6. MEASUREMENT UNCERTAINTY

Table 6.1 – Measurement uncertainty evaluation

Uncertainty Component	Section in IEEE 1528	Tol. (%)	Prob Dist	Div	c_i	$c_i . u_i$ (%)	v_i
Measurement System							
Probe Calibration	E2.1	±5.9	N	1	1	±5.9	∞
Axial Isotropy	E2.2	±4.7	R	√3	$(1-c_p)^{1/2}$	±1.9	∞
Hemispherical Isotropy	E2.2	±9.6	R	√3	$(c_p)^{1/2}$	±3.9	∞
Boundary Effect	E2.3	±1.0	R	√3	1	±0.6	∞
Linearity	E2.4	±4.7	R	√3	1	±2.7	∞
System Detection Limits	E2.5	±1.0	R	√3	1	±0.6	∞
Readout Electronics	E2.6	±1.0	N	1	1	±1.0	∞
Response Time	E2.7	±0.8	R	√3	1	±0.5	∞
Integration Time	E2.8	±2.6	R	√3	1	±1.5	∞
RF Ambient Conditions - Noise	E6.1	±3.0	R	√3	1	±1.7	∞
RF Ambient Conditions - Reflections	E6.1	±3.0	R	√3	1	±1.7	∞
Probe Positioner Mechanical Tolerance	E6.2	±0.4	R	√3	1	±0.2	∞
Probe Positioning with respect to Phantom Shell	E6.3	±2.9	R	√3	1	±1.7	∞
Extrapolation, interpolation and Integration Algorithms for Max. SAR Evaluation	E5	±3.9	R	√3	1	±2.3	∞
Test sample Related							
Test Sample Positioning	E4.2	±6.0	N	1	1	±6.0	11
Device Holder Uncertainty	E4.1	±5.0	N	1	1	±5.0	7
Output Power Variation - SAR drift measurement	6.6.3	±0.0	R	√3	1	±0.0	∞
Phantom and Tissue Parameters							
Phantom Uncertainty (shape and thickness tolerances)	E3.1	±4.0	R	√3	1	±2.3	∞
Conductivity Target - tolerance	E3.2	±5.0	R	√3	0.64	±1.8	∞
Conductivity - measurement uncertainty	E3.3	±5.5	N	1	0.64	±3.5	5
Permittivity Target - tolerance	E3.2	±5.0	R	√3	0.6	±1.7	∞
Permittivity - measurement uncertainty	E3.3	±2.9	N	1	0.6	±1.7	5
Combined Standard Uncertainty			RSS			**±12.9**	116
Coverage Factor for 95%			**k=2**				
Expanded Uncertainty						**±25.8**	

Copyright © 2006 TCC Nokia

7. RESULTS

The measured Head SAR values for the test device are tabulated below:

850MHz Head SAR results

Mode	Test configuration		SAR, averaged over 1g (W/kg)		
			Ch 128 824.2 MHz	Ch 190 836.6 MHz	Ch 251 848.8 MHz
GSM	Power		28.4 dBm	28.1 dBm	27.7 dBm
	Left	Cheek	0.899	**0.946**	0.833
		Tilt	-	0.501	-
	Right	Cheek	0.805	0.826	0.854
		Tilt	-	0.465	-
2-Slot GPRS	Power		26.6 dBm	27.5 dBm	27.9 dBm
	Left	Cheek	-	0.876	-
		Tilt	-	-	-
	Right	Cheek	-	-	-
		Tilt	-	-	-
2-Slot EGPRS	Power		23.6 dBm	22.1 dBm	23.9 dBm
	Left	Cheek	-	0.475	-
		Tilt	-	-	-
	Right	Cheek	-	-	-
		Tilt	-	-	-

Copyright © 2006 TCC Nokia

1900MHz Head SAR results

Mode	Test configuration		SAR, averaged over 1g (W/kg)		
			Ch 512 1850.2 MHz	Ch 661 1880.0 MHz	Ch 810 1909.8 MHz
GSM	Power		32.0 dBm	32.7 dBm	32.6 dBm
	Left	Cheek	-	0.390	-
		Tilt	-	-	-
	Right	Cheek	-	-	-
		Tilt	-	-	-
2-Slot GPRS	Power		30.2 dBm	30.4 dBm	30.8 dBm
	Left	Cheek	-	0.466	-
		Tilt	-	0.398	-
	Right	Cheek	**0.529**	0.484	0.468
		Tilt	-	0.420	-
2-Slot EGPRS	Power		28.5 dBm	29.0 dBm	28.2 dBm
	Left	Cheek	-	-	-
		Tilt	-	-	-
	Right	Cheek	0.274	-	-
		Tilt	-	-	-

Copyright © 2006 TCC Nokia

The measured Body SAR values for the test device are tabulated below:

850MHz Body SAR results

Mode	Test configuration	SAR, averaged over 1g (W/kg)		
		Ch 128 824.2 MHz	Ch 190 836.6 MHz	Ch 251 848.8 MHz
GSM	Power	28.4 dBm	28.1 dBm	27.7 dBm
	Without headset	-	0.383	-
	Headset HS-6	-	-	-
2-Slot GPRS	Power	26.6 dBm	27.5 dBm	27.9 dBm
	Without headset	0.383	**0.384**	0.345
	Headset HS-6	0.187	0.231	0.231

1900MHz Body SAR results

Mode	Test configuration	SAR, averaged over 1g (W/kg)		
		Ch 512 1850.2 MHz	Ch 661 1880.0 MHz	Ch 810 1909.8 MHz
GSM	Power	32.0 dBm	32.7 dBm	32.6 dBm
	Without headset	-	0.336	-
	Headset HS-6	-	-	-
2-Slot GPRS	Power	30.2 dBm	30.4 dBm	30.8 dBm
	Without headset	**0.405**	0.398	0.389
	Headset HS-6	0.384	0.376	0.373

Plots of the Measurement scans are given in Appendix B.

Copyright © 2006 TCC Nokia

APPENDIX A: SYSTEM CHECKING SCANS

See the following pages.

Copyright © 2006 TCC Nokia

Date/Time: 2006-04-19 16:39:55

Test Laboratory: TCC Copenhagen
Type: D835V2; Serial: 476

Communication System: Continuous Wave
Frequency: 835 MHz; Duty Cycle: 1:1
Medium: Head 850; Medium Notes: Medium Temperature: t=22.0 C
Medium parameters used: f = 835 MHz; σ = 0.887 mho/m; ε_r = 40.4; ρ = 1000 kg/m^3
Phantom section: Flat Section

DASY4 Configuration:
- Probe: ET3DV6 - SN1808; Probe Notes: Advanced Extrapolation
- ConvF(6.17, 6.17, 6.17); Calibrated: 2005-08-30
- Sensor-Surface: 4mm (Mechanical And Optical Surface Detection)
- Electronics: DAE3 Sn573; Calibrated: 2005-09-21
- Phantom: SAM High Band; Type: QD000P40CB; Serial: TP-1301
- Measurement SW: DASY4, V4.6 Build 23; Postprocessing SW: SEMCAD, V1.8 Build 159

d=15mm, Pin=250mW/Zoom Scan (7x7x7)/Cube 0: Measurement grid: dx=5mm, dy=5mm, dz=5mm
Reference Value = 56.0 V/m; Power Drift = 0.023 dB
Peak SAR (extrapolated) = 3.57 W/kg
SAR(1 g) = 2.42 mW/g; SAR(10 g) = 1.58 mW/g
Maximum value of SAR (measured) = 2.62 mW/g

d=15mm, Pin=250mW/Area Scan (61x121x1): Measurement grid: dx=10mm, dy=10mm
Maximum value of SAR (interpolated) = 2.62 mW/g

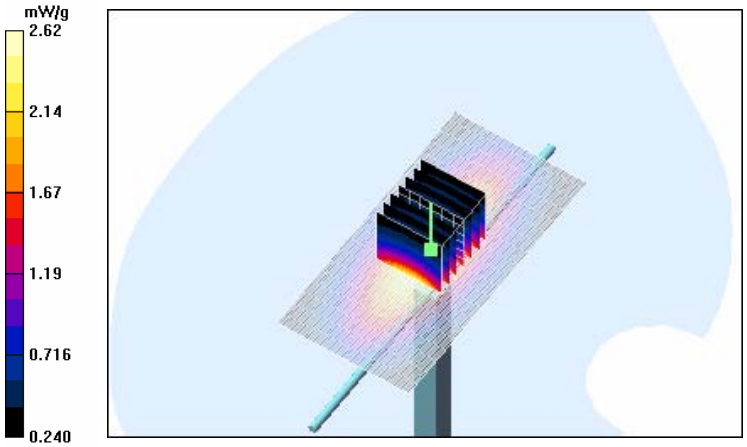

Copyright © 2006 TCC Nokia

Date/Time: 2006-05-03 13:34:13

Test Laboratory: TCC Copenhagen
Type: D835V2; Serial: 476

Communication System: Continuous Wave
Frequency: 835 MHz; Duty Cycle: 1:1
Medium: Head 850; Medium Notes: Medium Temperature: t=22.0 C
Medium parameters used: f = 835 MHz; σ = 0.906 mho/m; ε_r = 41.8; ρ = 1000 kg/m^3
Phantom section: Flat Section

DASY4 Configuration:
- Probe: ET3DV6 - SN1786; Probe Notes:
- ConvF(6.6, 6.6, 6.6); Calibrated: 2006-02-21
- Sensor-Surface: 4mm (Mechanical And Optical Surface Detection)
- Electronics: DAE3 Sn573; Calibrated: 2005-09-21
- Phantom: SAM High Band; Type: QD000P40CB; Serial: TP-1301
- Measurement SW: DASY4, V4.6 Build 23; Postprocessing SW: SEMCAD, V1.8 Build 159

d=15mm, Pin=250mW/Zoom Scan (7x7x7)/Cube 0: Measurement grid: dx=5mm, dy=5mm, dz=5mm
Reference Value = 52.5 V/m; Power Drift = -0.001 dB
Peak SAR (extrapolated) = 3.33 W/kg
SAR(1 g) = 2.26 mW/g; SAR(10 g) = 1.48 mW/g
Maximum value of SAR (measured) = 2.45 mW/g

d=15mm, Pin=250mW/Area Scan (61x121x1): Measurement grid: dx=10mm, dy=10mm
Maximum value of SAR (interpolated) = 2.42 mW/g

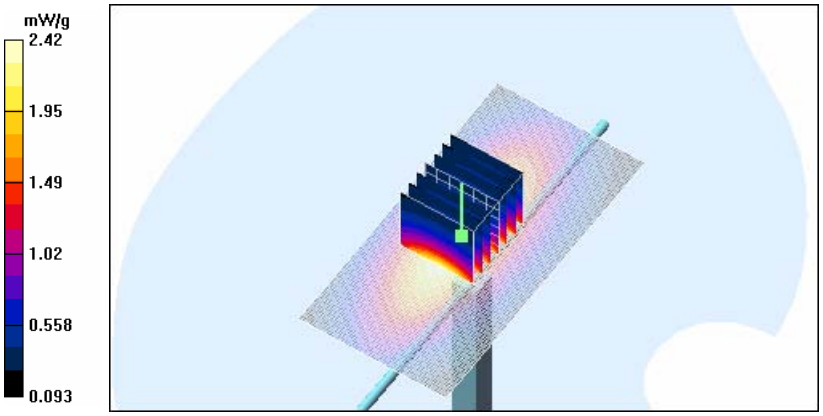

Copyright © 2006 TCC Nokia

Date/Time: 2006-04-25 15:44:49

Test Laboratory: TCC Copenhagen
Type: D1900V2; Serial: 5d063

Communication System: Continuous Wave
Frequency: 1900 MHz; Duty Cycle: 1:1
Medium: Head 1900; Medium Notes: Medium Temperature: t=21.9C
Medium parameters used: f = 1900 MHz; σ = 1.47 mho/m; ε_r = 39.6; ρ = 1000 kg/m^3
Phantom section: Flat Section

DASY4 Configuration:
- Probe: ET3DV6 - SN1813; Probe Notes: Advanced Extrapolation
- ConvF(4.89, 4.89, 4.89); Calibrated: 2005-09-19
- Sensor-Surface: 4mm (Mechanical And Optical Surface Detection)
- Electronics: DAE3 Sn339; Calibrated: 2005-08-17
- Phantom: SAM 1; Type: Twin Phantom; Serial: TP-1215
- Measurement SW: DASY4, V4.6 Build 23; Postprocessing SW: SEMCAD, V1.8 Build 159

d=10mm, Pin=250mW/Zoom Scan (7x7x7)/Cube 0: Measurement grid: dx=5mm, dy=5mm, dz=5mm
Reference Value = 91.1 V/m; Power Drift = 0.057 dB
Peak SAR (extrapolated) = 16.5 W/kg
SAR(1 g) = 9.53 mW/g; SAR(10 g) = 5.03 mW/g
Maximum value of SAR (measured) = 10.9 mW/g

d=10mm, Pin=250mW/Area Scan (71x71x1): Measurement grid: dx=10mm, dy=10mm
Maximum value of SAR (interpolated) = 11.0 mW/g

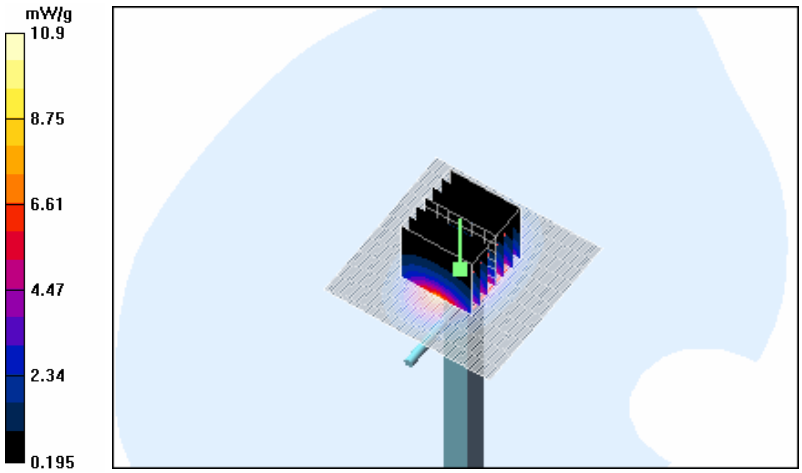

Copyright © 2006 TCC Nokia

Date/Time: 2006-04-18 13:36:30

Test Laboratory: TCC Copenhagen
Type: D835V2; Serial: 476

Communication System: Continuous Wave
Frequency: 835 MHz; Duty Cycle: 1:1
Medium: Body 850; Medium Notes: Medium Temperature: t= 21.6 C
Medium parameters used: f = 835 MHz; σ = 0.971 mho/m; ε_r = 53.6; ρ = 1000 kg/m^3
Phantom section: Flat Section

DASY4 Configuration:
- Probe: ET3DV6 - SN1813; Probe Notes: Advanced Extrapolation
- ConvF(6.18, 6.18, 6.18); Calibrated: 2005-09-19
- Sensor-Surface: 4mm (Mechanical And Optical Surface Detection)
- Electronics: DAE3 Sn339; Calibrated: 2005-08-17
- Phantom: SAM 2; Type: Twin Phantom; Serial: TP-1037
- Measurement SW: DASY4, V4.6 Build 23; Postprocessing SW: SEMCAD, V1.8 Build 159

d=15mm, Pin=250mW/Zoom Scan (7x7x7)/Cube 0: Measurement grid: dx=5mm, dy=5mm, dz=5mm
Reference Value = 53.6 V/m; Power Drift = 0.019 dB
Peak SAR (extrapolated) = 3.47 W/kg
SAR(1 g) = 2.41 mW/g; SAR(10 g) = 1.58 mW/g
Maximum value of SAR (measured) = 2.59 mW/g

d=15mm, Pin=250mW/Area Scan (61x121x1): Measurement grid: dx=10mm, dy=10mm
Maximum value of SAR (interpolated) = 2.62 mW/g

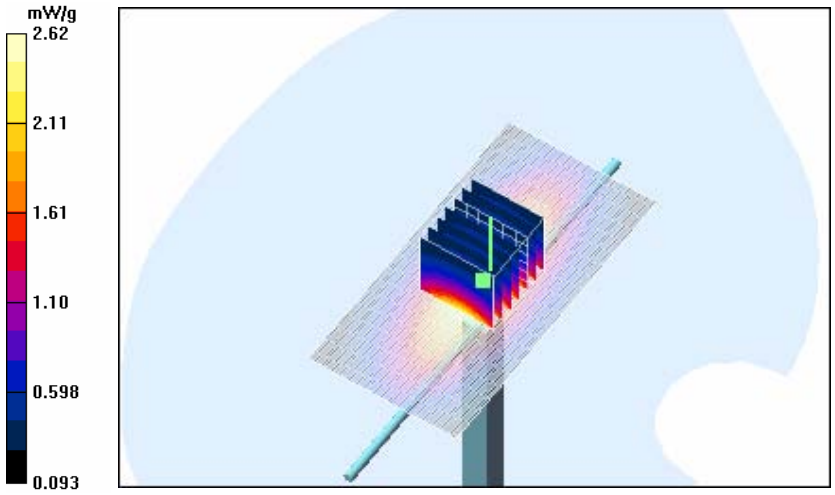

Copyright © 2006 TCC Nokia

Date/Time: 2006-04-24 16:07:52

Test Laboratory: TCC Copenhagen
Type: D1900V2; Serial: 5d063

Communication System: Continuous Wave
Frequency: 1900 MHz; Duty Cycle: 1:1
Medium: Body 1900; Medium Notes: Medium Temperature: t=21.4 C
Medium parameters used: f = 1900 MHz; σ = 1.58 mho/m; ε_r = 54.7; ρ = 1000 kg/m^3
Phantom section: Flat Section

DASY4 Configuration:
- Probe: ET3DV6 - SN1813; Probe Notes: Advanced Extrapolation
- ConvF(4.36, 4.36, 4.36); Calibrated: 2005-09-19
- Sensor-Surface: 4mm (Mechanical And Optical Surface Detection)
- Electronics: DAE3 Sn339; Calibrated: 2005-08-17
- Phantom: SAM 3; Type: Twin Phantom; Serial: TP-1302
- Measurement SW: DASY4, V4.6 Build 23; Postprocessing SW: SEMCAD, V1.8 Build 159

d=10mm, Pin=250mW/Zoom Scan (7x7x7)/Cube 0: Measurement grid: dx=5mm, dy=5mm, dz=5mm
Reference Value = 86.2 V/m; Power Drift = 0.070 dB
Peak SAR (extrapolated) = 17.8 W/kg
SAR(1 g) = 10.3 mW/g; SAR(10 g) = 5.44 mW/g
Maximum value of SAR (measured) = 11.7 mW/g

d=10mm, Pin=250mW/Area Scan (71x71x1): Measurement grid: dx=10mm, dy=10mm
Maximum value of SAR (interpolated) = 11.7 mW/g

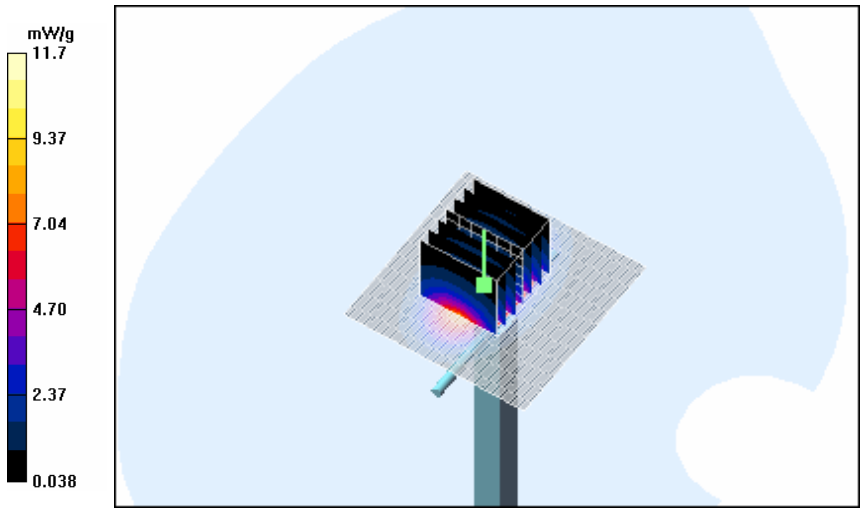

Copyright © 2006 TCC Nokia

APPENDIX B: MEASUREMENT SCANS

See the following pages.

Copyright © 2006 TCC Nokia

Date/Time: 2006-04-19 17:16:05

Test Laboratory: TCC Copenhagen
Type: RM-167; Serial: 004400/89/165220/6

Communication System: GSM850
Frequency: 836.6 MHz; Duty Cycle: 1:8.3
Medium: Head 850; Medium Notes: Medium Temperature: t=22.0 C
Medium parameters used: f = 837 MHz; σ = 0.889 mho/m; ε_r = 40.4; ρ = 1000 kg/m^3
Phantom section: Left Section

DASY4 Configuration:
- Probe: ET3DV6 - SN1808; Probe Notes: Advanced Extrapolation
- ConvF(6.17, 6.17, 6.17); Calibrated: 2005-08-30
- Sensor-Surface: 4mm (Mechanical And Optical Surface Detection)
- Electronics: DAE3 Sn573; Calibrated: 2005-09-21
- Phantom: SAM High Band; Type: QD000P40CB; Serial: TP-1301
- Measurement SW: DASY4, V4.6 Build 23; Postprocessing SW: SEMCAD, V1.8 Build 159

Cheek position - Middle/Zoom Scan (5x5x7) (5x5x7)/Cube 0: Measurement grid: dx=7.5mm, dy=7.5mm, dz=5mm
Reference Value = 23.7 V/m; Power Drift = -0.179 dB
Peak SAR (extrapolated) = 1.30 W/kg
SAR(1 g) = 0.946 mW/g; SAR(10 g) = 0.652 mW/g
Maximum value of SAR (measured) = 0.996 mW/g

Cheek position - Middle/Area Scan (51x91x1): Measurement grid: dx=15mm, dy=15mm
Maximum value of SAR (interpolated) = 1.07 mW/g

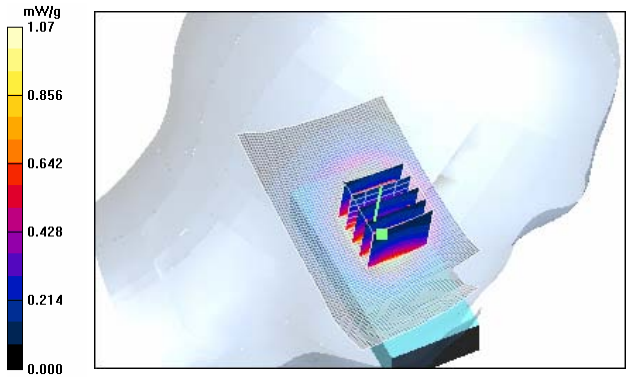

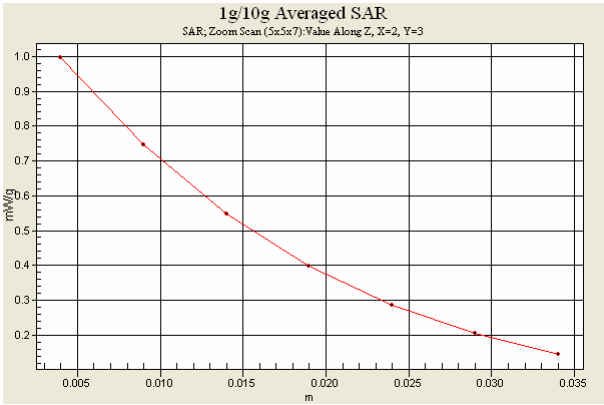

Copyright © 2006 TCC Nokia

Date/Time: 2006-04-19 17:56:36

Test Laboratory: TCC Copenhagen
Type: RM-167; Serial: 004400/89/165220/6

Communication System: GSM850
Frequency: 836.6 MHz; Duty Cycle: 1:8.3
Medium: Head 850; Medium Notes: Medium Temperature: t=22.0 C
Medium parameters used: f = 837 MHz; σ = 0.889 mho/m; ε_r = 40.4; ρ = 1000 kg/m^3
Phantom section: Left Section

DASY4 Configuration:
- Probe: ET3DV6 - SN1808; Probe Notes: Advanced Extrapolation
- ConvF(6.17, 6.17, 6.17); Calibrated: 2005-08-30
- Sensor-Surface: 4mm (Mechanical And Optical Surface Detection)Sensor-Surface: 4mm (Mechanical And Optical Surface Detection (Locations From Previous Scan Used))
- Electronics: DAE3 Sn573; Calibrated: 2005-09-21
- Phantom: SAM High Band; Type: QD000P40CB; Serial: TP-1301
- Measurement SW: DASY4, V4.6 Build 23; Postprocessing SW: SEMCAD, V1.8 Build 159

Tilt position - Middle/Zoom Scan (5x5x7) (5x5x7)/Cube 0: Measurement grid: dx=7.5mm, dy=7.5mm, dz=5mm
Reference Value = 20.8 V/m; Power Drift = -0.044 dB
Peak SAR (extrapolated) = 0.679 W/kg
SAR(1 g) = 0.501 mW/g; SAR(10 g) = 0.343 mW/g
Maximum value of SAR (measured) = 0.533 mW/g

Tilt position - Middle/Area Scan (51x91x1): Measurement grid: dx=15mm, dy=15mm
Maximum value of SAR (interpolated) = 0.549 mW/g

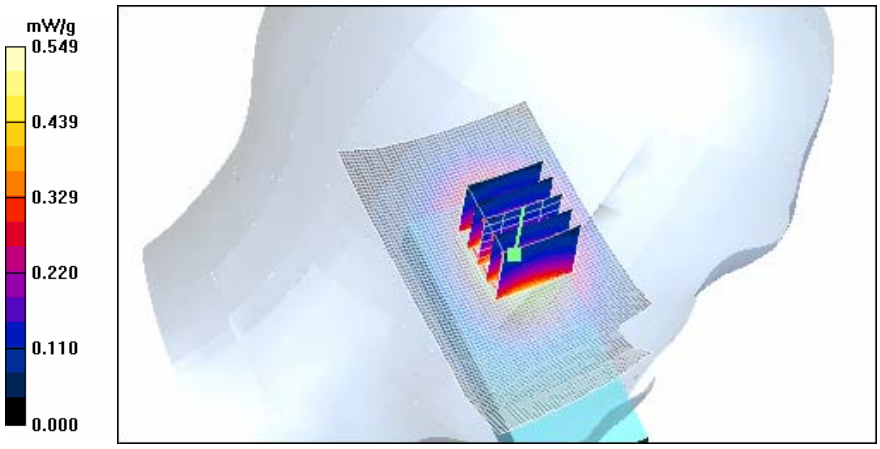

Copyright © 2006 TCC Nokia

Date/Time: 2006-05-03 14:39:58

Test Laboratory: TCC Copenhagen
Type: RM-167; Serial: 004400/89/165220/6

Communication System: GSM850
Frequency: 848.8 MHz; Duty Cycle: 1:8.3
Medium: Head 850; Medium Notes: Medium Temperature: t=22.0 C
Medium parameters used: f = 849 MHz; σ = 0.921 mho/m; ε_r = 41.6; ρ = 1000 kg/m^3
Phantom section: Right Section

DASY4 Configuration:
- Probe: ET3DV6 - SN1786; Probe Notes:
- ConvF(6.6, 6.6, 6.6); Calibrated: 2006-02-21
- Sensor-Surface: 4mm (Mechanical And Optical Surface Detection)
- Electronics: DAE3 Sn573; Calibrated: 2005-09-21
- Phantom: SAM High Band; Type: QD000P40CB; Serial: TP-1301
- Measurement SW: DASY4, V4.6 Build 23; Postprocessing SW: SEMCAD, V1.8 Build 159

Cheek position - High/Zoom Scan (5x5x7)/Cube 0: Measurement grid: dx=7.5mm, dy=7.5mm, dz=5mm
Reference Value = 22.8 V/m; Power Drift = -0.001 dB
Peak SAR (extrapolated) = 1.14 W/kg
SAR(1 g) = 0.854 mW/g; SAR(10 g) = 0.593 mW/g
Maximum value of SAR (measured) = 0.905 mW/g

Cheek position - High/Area Scan (51x91x1): Measurement grid: dx=15mm, dy=15mm
Maximum value of SAR (interpolated) = 0.939 mW/g

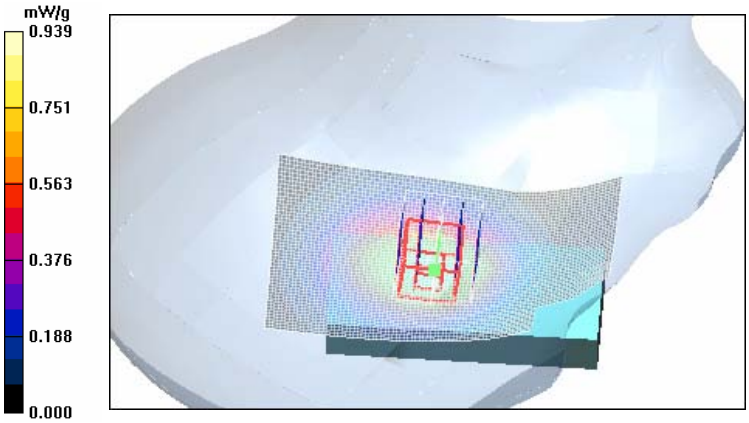

Copyright © 2006 TCC Nokia

Date/Time: 2006-04-19 18:26:41

Test Laboratory: TCC Copenhagen
Type: RM-167; Serial: 004400/89/165220/6

Communication System: GSM850
Frequency: 836.6 MHz; Duty Cycle: 1:8.3
Medium: Head 850; Medium Notes: Medium Temperature: t=22.0 C
Medium parameters used: f = 837 MHz; σ = 0.889 mho/m; ε_r = 40.4; ρ = 1000 kg/m^3
Phantom section: Right Section

DASY4 Configuration:
- Probe: ET3DV6 - SN1808; Probe Notes: Advanced Extrapolation
- ConvF(6.17, 6.17, 6.17); Calibrated: 2005-08-30
- Sensor-Surface: 4mm (Mechanical And Optical Surface Detection (Locations From Previous Scan Used))Sensor-Surface: 4mm (Mechanical And Optical Surface Detection)
- Electronics: DAE3 Sn573; Calibrated: 2005-09-21
- Phantom: SAM High Band; Type: QD000P40CB; Serial: TP-1301
- Measurement SW: DASY4, V4.6 Build 23; Postprocessing SW: SEMCAD, V1.8 Build 159

Tilt position - Middle/Area Scan (51x91x1): Measurement grid: dx=15mm, dy=15mm
Maximum value of SAR (interpolated) = 0.499 mW/g

Tilt position - Middle/Zoom Scan (5x5x7) (5x5x7)/Cube 0: Measurement grid: dx=7.5mm, dy=7.5mm, dz=5mm
Reference Value = 19.9 V/m; Power Drift = 0.008 dB
Peak SAR (extrapolated) = 0.637 W/kg
SAR(1 g) = 0.465 mW/g; SAR(10 g) = 0.317 mW/g
Maximum value of SAR (measured) = 0.499 mW/g

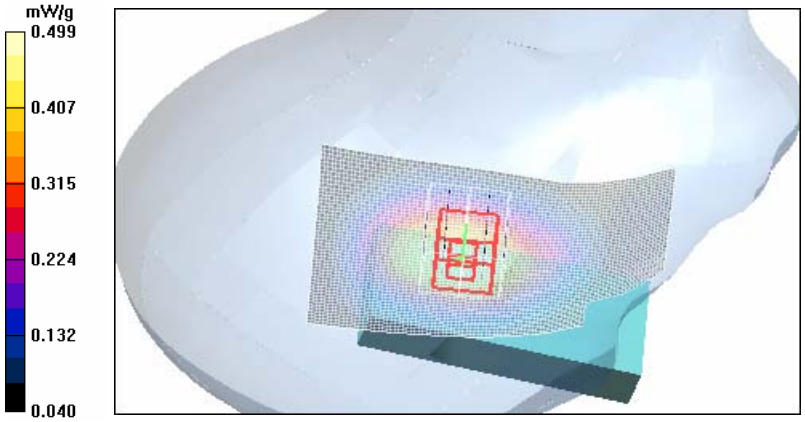

Copyright © 2006 TCC Nokia

Date/Time: 2006-04-19 17:35:23

Test Laboratory: TCC Copenhagen
Type: RM-167; Serial: 004400/89/165220/6

Communication System: 2-slot GPRS850
Frequency: 836.6 MHz; Duty Cycle: 1:4.2
Medium: Head 850; Medium Notes: Medium Temperature: t=22.0 C
Medium parameters used: f = 837 MHz; σ = 0.889 mho/m; ε_r = 40.4; ρ = 1000 kg/m^3
Phantom section: Left Section

DASY4 Configuration:
- Probe: ET3DV6 - SN1808; Probe Notes: Advanced Extrapolation
- ConvF(6.17, 6.17, 6.17); Calibrated: 2005-08-30
- Sensor-Surface: 4mm (Mechanical And Optical Surface Detection)
- Electronics: DAE3 Sn573; Calibrated: 2005-09-21
- Phantom: SAM High Band; Type: QD000P40CB; Serial: TP-1301
- Measurement SW: DASY4, V4.6 Build 23; Postprocessing SW: SEMCAD, V1.8 Build 159

Cheek position - Middle/Zoom Scan (5x5x7) (5x5x7)/Cube 0: Measurement grid: dx=7.5mm, dy=7.5mm, dz=5mm
Reference Value = 22.7 V/m; Power Drift = -0.067 dB
Peak SAR (extrapolated) = 1.23 W/kg
SAR(1 g) = 0.876 mW/g; SAR(10 g) = 0.603 mW/g
Maximum value of SAR (measured) = 0.918 mW/g

Cheek position - Middle/Area Scan (51x91x1): Measurement grid: dx=15mm, dy=15mm
Maximum value of SAR (interpolated) = 0.970 mW/g

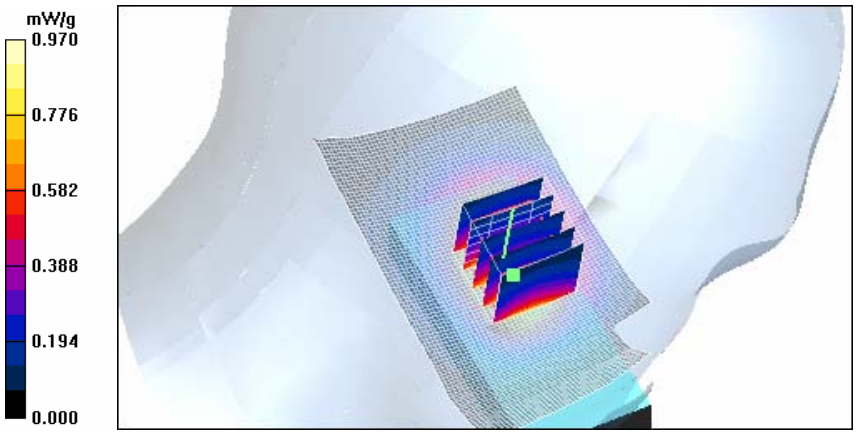

Copyright © 2006 TCC Nokia

Date/Time: 2006-04-19 20:14:48

Test Laboratory: TCC Copenhagen
Type: RM-167; Serial: 004400/89/165220/6

Communication System: 2-slot EGPRS850
Frequency: 836.6 MHz; Duty Cycle: 1:4.2
Medium: Head 850; Medium Notes: Medium Temperature: t=22.0 C
Medium parameters used: f = 837 MHz; σ = 0.889 mho/m; ε_r = 40.4; ρ = 1000 kg/m^3
Phantom section: Left Section

DASY4 Configuration:
- Probe: ET3DV6 - SN1808; Probe Notes: Advanced Extrapolation
- ConvF(6.17, 6.17, 6.17); Calibrated: 2005-08-30
- Sensor-Surface: 4mm (Mechanical And Optical Surface Detection)
- Electronics: DAE3 Sn573; Calibrated: 2005-09-21
- Phantom: SAM High Band; Type: QD000P40CB; Serial: TP-1301
- Measurement SW: DASY4, V4.6 Build 23; Postprocessing SW: SEMCAD, V1.8 Build 159

Cheek position - Middle/Zoom Scan (5x5x7) (5x5x7)/Cube 0: Measurement grid: dx=7.5mm, dy=7.5mm, dz=5mm
Reference Value = 17.0 V/m; Power Drift = -0.030 dB
Peak SAR (extrapolated) = 0.640 W/kg
SAR(1 g) = 0.475 mW/g; SAR(10 g) = 0.328 mW/g
Maximum value of SAR (measured) = 0.498 mW/g

Cheek position - Middle/Area Scan (51x91x1): Measurement grid: dx=15mm, dy=15mm
Maximum value of SAR (interpolated) = 0.526 mW/g

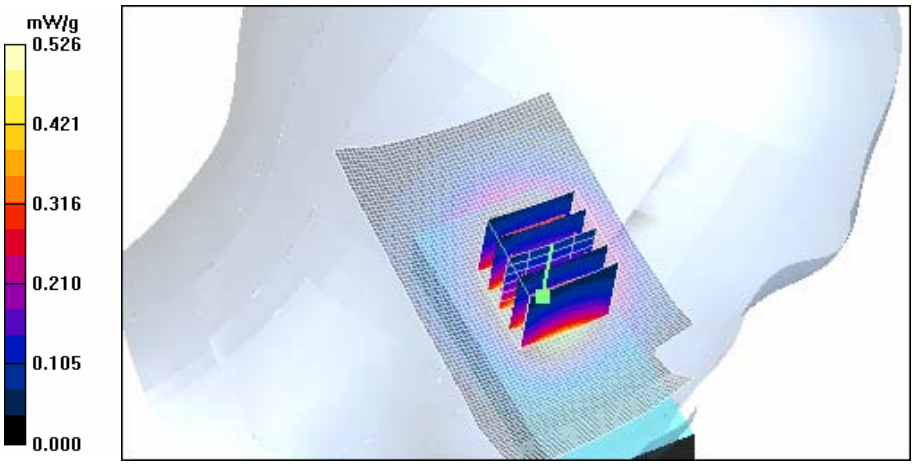

Copyright © 2006 TCC Nokia

Date/Time: 2006-04-25 17:01:02

Test Laboratory: TCC Copenhagen
Type: RM-167; Serial: 004400/89/165220/6

Communication System: GSM 1900
Frequency: 1880 MHz; Duty Cycle: 1:8.3
Medium: Head 1900; Medium Notes: Medium Temperature: t=21.9C
Medium parameters used: f = 1880 MHz; σ = 1.45 mho/m; ε_r = 39.7; ρ = 1000 kg/m^3
Phantom section: Left Section

DASY4 Configuration:
- Probe: ET3DV6 - SN1813; Probe Notes: Advanced Extrapolation
- ConvF(4.89, 4.89, 4.89); Calibrated: 2005-09-19
- Sensor-Surface: 4mm (Mechanical And Optical Surface Detection)
- Electronics: DAE3 Sn339; Calibrated: 2005-08-17
- Phantom: SAM 1; Type: Twin Phantom; Serial: TP-1215
- Measurement SW: DASY4, V4.6 Build 23; Postprocessing SW: SEMCAD, V1.8 Build 159

Cheek position - Middle/Zoom Scan (5x5x7) (5x5x7)/Cube 0: Measurement grid: dx=7.5mm, dy=7.5mm, dz=5mm
Reference Value = 16.7 V/m; Power Drift = -0.025 dB
Peak SAR (extrapolated) = 0.549 W/kg
SAR(1 g) = 0.390 mW/g; SAR(10 g) = 0.240 mW/g
Maximum value of SAR (measured) = 0.420 mW/g

Cheek position - Middle/Area Scan (51x91x1): Measurement grid: dx=15mm, dy=15mm
Maximum value of SAR (interpolated) = 0.446 mW/g

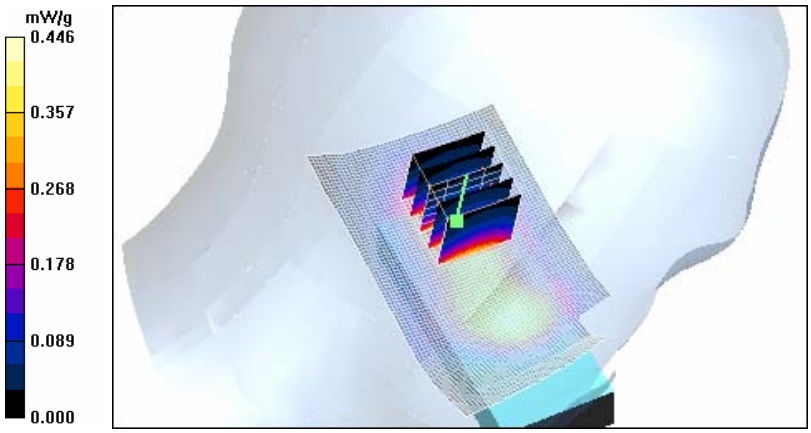

Copyright © 2006 TCC Nokia

Date/Time: 2006-04-25 17:26:13

Test Laboratory: TCC Copenhagen
Type: RM-167; Serial: 004400/89/165220/6

Communication System: 2-slot GPRS1900
Frequency: 1880 MHz; Duty Cycle: 1:4.2
Medium: Head 1900; Medium Notes: Medium Temperature: t=21.9C
Medium parameters used: f = 1880 MHz; σ = 1.45 mho/m; ε_r = 39.7; ρ = 1000 kg/m^3
Phantom section: Left Section

DASY4 Configuration:
- Probe: ET3DV6 - SN1813; Probe Notes: Advanced Extrapolation
- ConvF(4.89, 4.89, 4.89); Calibrated: 2005-09-19
- Sensor-Surface: 4mm (Mechanical And Optical Surface Detection)
- Electronics: DAE3 Sn339; Calibrated: 2005-08-17
- Phantom: SAM 1; Type: Twin Phantom; Serial: TP-1215
- Measurement SW: DASY4, V4.6 Build 23; Postprocessing SW: SEMCAD, V1.8 Build 159

Cheek position - Middle/Zoom Scan (5x5x7) (5x5x7)/Cube 0: Measurement grid: dx=7.5mm, dy=7.5mm, dz=5mm
Reference Value = 18.4 V/m; Power Drift = -0.021 dB
Peak SAR (extrapolated) = 0.663 W/kg
SAR(1 g) = 0.466 mW/g; SAR(10 g) = 0.287 mW/g
Maximum value of SAR (measured) = 0.500 mW/g

Cheek position - Middle/Area Scan (51x91x1): Measurement grid: dx=15mm, dy=15mm
Maximum value of SAR (interpolated) = 0.535 mW/g

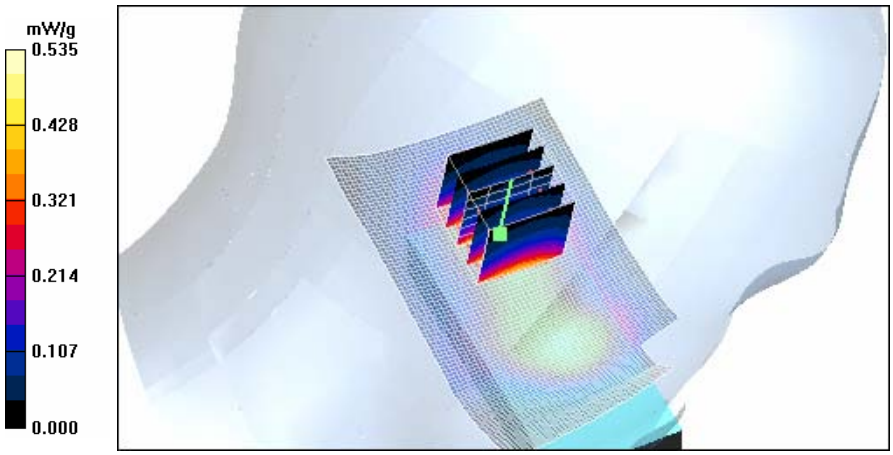

Copyright © 2006 TCC Nokia

Date/Time: 2006-04-25 17:52:24

Test Laboratory: TCC Copenhagen
Type: RM-167; Serial: 004400/89/165220/6

Communication System: 2-slot GPRS1900
Frequency: 1880 MHz; Duty Cycle: 1:4.2
Medium: Head 1900; Medium Notes: Medium Temperature: t=21.9C
Medium parameters used: f = 1880 MHz; σ = 1.45 mho/m; ε_r = 39.7; ρ = 1000 kg/m^3
Phantom section: Left Section

DASY4 Configuration:
- Probe: ET3DV6 - SN1813; Probe Notes: Advanced Extrapolation
- ConvF(4.89, 4.89, 4.89); Calibrated: 2005-09-19
- Sensor-Surface: 4mm (Mechanical And Optical Surface Detection (Locations From Previous Scan Used))Sensor-Surface: 4mm (Mechanical And Optical Surface Detection)
- Electronics: DAE3 Sn339; Calibrated: 2005-08-17
- Phantom: SAM 1; Type: Twin Phantom; Serial: TP-1215
- Measurement SW: DASY4, V4.6 Build 23; Postprocessing SW: SEMCAD, V1.8 Build 159

Tilt position - Middle/Area Scan (51x91x1): Measurement grid: dx=15mm, dy=15mm
Maximum value of SAR (interpolated) = 0.457 mW/g

Tilt position - Middle/Zoom Scan (5x5x7) (5x5x7)/Cube 0: Measurement grid: dx=7.5mm, dy=7.5mm, dz=5mm
Reference Value = 18.4 V/m; Power Drift = -0.065 dB
Peak SAR (extrapolated) = 0.596 W/kg
SAR(1 g) = 0.398 mW/g; SAR(10 g) = 0.238 mW/g
Maximum value of SAR (measured) = 0.426 mW/g

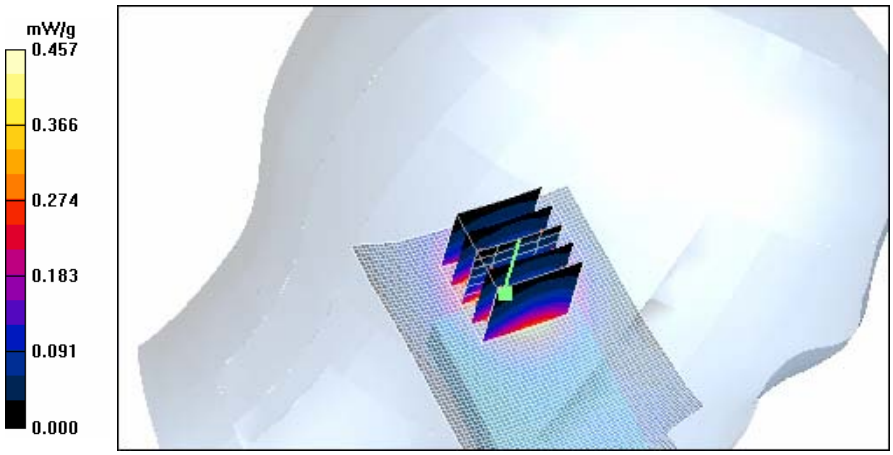

Copyright © 2006 TCC Nokia

Date/Time: 2006-04-25 19:11:35

Test Laboratory: TCC Copenhagen
Type: RM-167; Serial: 004400/89/165220/6

Communication System: 2-slot GPRS1900
Frequency: 1850.2 MHz; Duty Cycle: 1:4.2
Medium: Head 1900; Medium Notes: Medium Temperature: t=21.9C
Medium parameters used (interpolated): f = 1850.2 MHz; σ = 1.42 mho/m; ε_r = 39.8; ρ = 1000 kg/m^3
Phantom section: Right Section

DASY4 Configuration:
- Probe: ET3DV6 - SN1813; Probe Notes: Advanced Extrapolation
- ConvF(4.89, 4.89, 4.89); Calibrated: 2005-09-19
- Sensor-Surface: 4mm (Mechanical And Optical Surface Detection)Sensor-Surface: 4mm (Mechanical And Optical Surface Detection (Locations From Previous Scan Used))
- Electronics: DAE3 Sn339; Calibrated: 2005-08-17
- Phantom: SAM 1; Type: Twin Phantom; Serial: TP-1215
- Measurement SW: DASY4, V4.6 Build 23; Postprocessing SW: SEMCAD, V1.8 Build 159

Cheek position - Low/Zoom Scan (5x5x7) (5x5x7)/Cube 0: Measurement grid: dx=7.5mm, dy=7.5mm, dz=5mm
Reference Value = 17.1 V/m; Power Drift = -0.054 dB
Peak SAR (extrapolated) = 0.716 W/kg
SAR(1 g) = 0.529 mW/g; SAR(10 g) = 0.328 mW/g

Info: Interpolated medium parameters used for SAR evaluation.
Maximum value of SAR (measured) = 0.579 mW/g

Cheek position - Low/Area Scan (51x91x1): Measurement grid: dx=15mm, dy=15mm

Info: Interpolated medium parameters used for SAR evaluation.
Maximum value of SAR (interpolated) = 0.586 mW/g

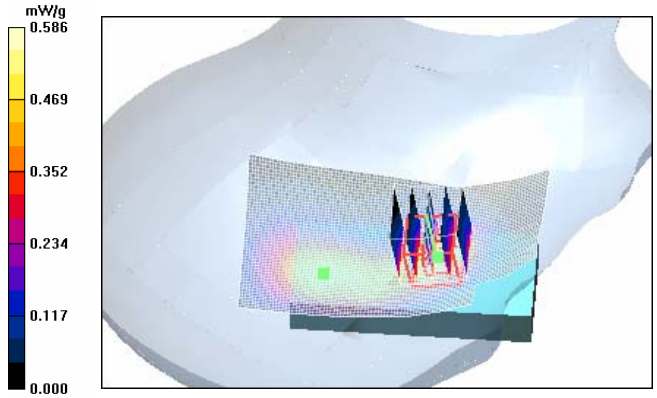

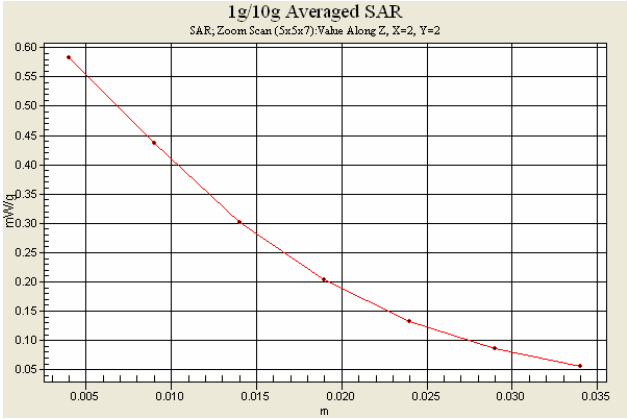

Copyright © 2006 TCC Nokia

Date/Time: 2006-04-25 18:44:31

Test Laboratory: TCC Copenhagen
Type: RM-167; Serial: 004400/89/165220/6

Communication System: 2-slot GPRS1900
Frequency: 1880 MHz; Duty Cycle: 1:4.2
Medium: Head 1900; Medium Notes: Medium Temperature: t=21.9C
Medium parameters used: f = 1880 MHz; σ = 1.45 mho/m; ε_r = 39.7; ρ = 1000 kg/m^3
Phantom section: Right Section

DASY4 Configuration:
- Probe: ET3DV6 - SN1813; Probe Notes: Advanced Extrapolation
- ConvF(4.89, 4.89, 4.89); Calibrated: 2005-09-19
- Sensor-Surface: 4mm (Mechanical And Optical Surface Detection (Locations From Previous Scan Used))Sensor-Surface: 4mm (Mechanical And Optical Surface Detection)
- Electronics: DAE3 Sn339; Calibrated: 2005-08-17
- Phantom: SAM 1; Type: Twin Phantom; Serial: TP-1215
- Measurement SW: DASY4, V4.6 Build 23; Postprocessing SW: SEMCAD, V1.8 Build 159

Tilt position - Middle/Area Scan (51x91x1): Measurement grid: dx=15mm, dy=15mm
Maximum value of SAR (interpolated) = 0.452 mW/g

Tilt position - Middle/Zoom Scan (5x5x7) (5x5x7)/Cube 0: Measurement grid: dx=7.5mm, dy=7.5mm, dz=5mm
Reference Value = 16.5 V/m; Power Drift = 0.028 dB
Peak SAR (extrapolated) = 0.728 W/kg
SAR(1 g) = 0.420 mW/g; SAR(10 g) = 0.243 mW/g
Maximum value of SAR (measured) = 0.460 mW/g

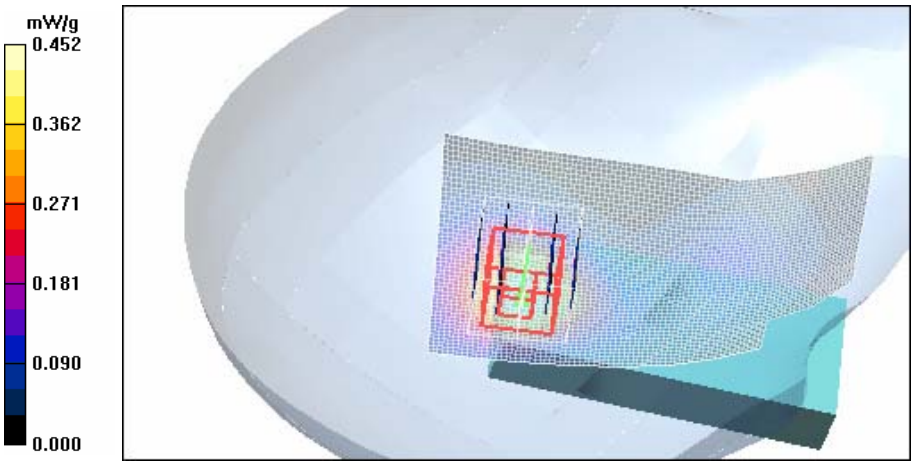

Copyright © 2006 TCC Nokia

Date/Time: 2006-04-25 20:25:18

Test Laboratory: TCC Copenhagen
Type: RM-167; Serial: 004400/89/165220/6

Communication System: 2-slot EGPRS1900
Frequency: 1850.2 MHz; Duty Cycle: 1:4.2
Medium: Head 1900; Medium Notes: Medium Temperature: t=21.9C
Medium parameters used (interpolated): f = 1850.2 MHz; σ = 1.42 mho/m; ε_r = 39.8; ρ = 1000 kg/m^3
Phantom section: Right Section

DASY4 Configuration:
- Probe: ET3DV6 - SN1813; Probe Notes: Advanced Extrapolation
- ConvF(4.89, 4.89, 4.89); Calibrated: 2005-09-19
- Sensor-Surface: 4mm (Mechanical And Optical Surface Detection)
- Electronics: DAE3 Sn339; Calibrated: 2005-08-17
- Phantom: SAM 1; Type: Twin Phantom; Serial: TP-1215
- Measurement SW: DASY4, V4.6 Build 23; Postprocessing SW: SEMCAD, V1.8 Build 159

Cheek position - Low/Zoom Scan (5x5x7) (5x5x7)/Cube 0: Measurement grid: dx=7.5mm, dy=7.5mm, dz=5mm
Reference Value = 12.1 V/m; Power Drift = -0.216 dB
Peak SAR (extrapolated) = 0.359 W/kg
SAR(1 g) = 0.274 mW/g; SAR(10 g) = 0.171 mW/g
Info: Interpolated medium parameters used for SAR evaluation.
Maximum value of SAR (measured) = 0.301 mW/g

Cheek position - Low/Area Scan (51x91x1): Measurement grid: dx=15mm, dy=15mm
Info: Interpolated medium parameters used for SAR evaluation.
Maximum value of SAR (interpolated) = 0.316 mW/g

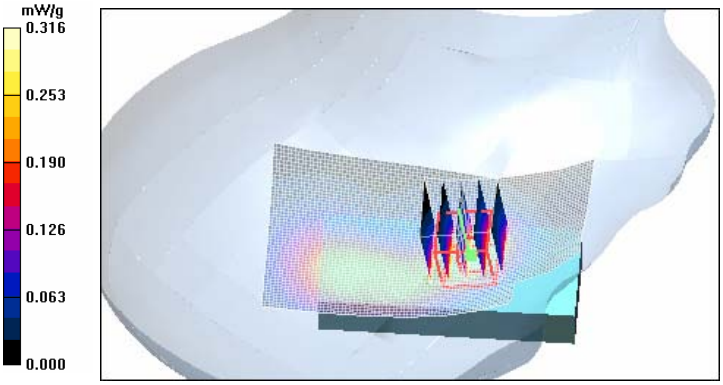

Copyright © 2006 TCC Nokia

Date/Time: 2006-04-18 18:14:05

Test Laboratory: TCC Copenhagen
Type: RM-167; Serial: 004400/89/165220/6

Communication System: GSM850
Frequency: 836.6 MHz; Duty Cycle: 1:8.3
Medium: Body 850; Medium Notes: Medium Temperature: t= 21.6 C
Medium parameters used: f = 837 MHz; σ = 0.973 mho/m; ε_r = 53.6; ρ = 1000 kg/m^3
Phantom section: Flat Section

DASY4 Configuration:
- Probe: ET3DV6 - SN1813; Probe Notes: Advanced Extrapolation
- ConvF(6.18, 6.18, 6.18); Calibrated: 2005-09-19
- Sensor-Surface: 4mm (Mechanical And Optical Surface Detection)
- Electronics: DAE3 Sn339; Calibrated: 2005-08-17
- Phantom: SAM 2; Type: Twin Phantom; Serial: TP-1037
- Measurement SW: DASY4, V4.6 Build 23; Postprocessing SW: SEMCAD, V1.8 Build 159

Body - Middle - No Accessory/Zoom Scan (5x5x7) (5x5x7)/Cube 0: Measurement grid: dx=7.5mm, dy=7.5mm, dz=5mm
Reference Value = 10.5 V/m; Power Drift = 0.048 dB
Peak SAR (extrapolated) = 0.505 W/kg
SAR(1 g) = 0.383 mW/g; SAR(10 g) = 0.275 mW/g
Maximum value of SAR (measured) = 0.407 mW/g

Body - Middle - No Accessory/Area Scan (51x101x1): Measurement grid: dx=15mm, dy=15mm
Maximum value of SAR (interpolated) = 0.408 mW/g

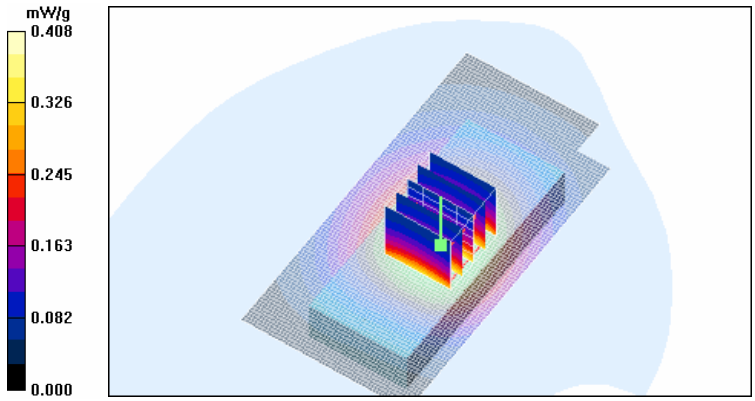

Copyright © 2006 TCC Nokia

Date/Time: 2006-04-18 18:29:55

Test Laboratory: TCC Copenhagen
Type: RM-167; Serial: 004400/89/165220/6

Communication System: 2-slot GPRS850
Frequency: 836.6 MHz; Duty Cycle: 1:4.2
Medium: Body 850; Medium Notes: Medium Temperature: t= 21.6 C
Medium parameters used: f = 837 MHz; σ = 0.973 mho/m; ε_r = 53.6; ρ = 1000 kg/m^3
Phantom section: Flat Section

DASY4 Configuration:
- Probe: ET3DV6 - SN1813; Probe Notes: Advanced Extrapolation
- ConvF(6.18, 6.18, 6.18); Calibrated: 2005-09-19
- Sensor-Surface: 4mm (Mechanical And Optical Surface Detection)
- Electronics: DAE3 Sn339; Calibrated: 2005-08-17
- Phantom: SAM 2; Type: Twin Phantom; Serial: TP-1037
- Measurement SW: DASY4, V4.6 Build 23; Postprocessing SW: SEMCAD, V1.8 Build 159

Body - Middle - No Accessory/Zoom Scan (5x5x7) (5x5x7)/Cube 0: Measurement grid: dx=7.5mm, dy=7.5mm, dz=5mm
Reference Value = 10.7 V/m; Power Drift = -0.078 dB
Peak SAR (extrapolated) = 0.494 W/kg
SAR(1 g) = 0.384 mW/g; SAR(10 g) = 0.275 mW/g
Maximum value of SAR (measured) = 0.407 mW/g

Body - Middle - No Accessory/Area Scan (51x101x1): Measurement grid: dx=15mm, dy=15mm
Maximum value of SAR (interpolated) = 0.416 mW/g

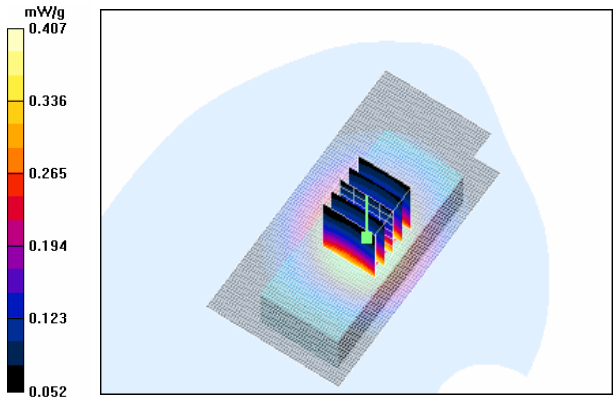

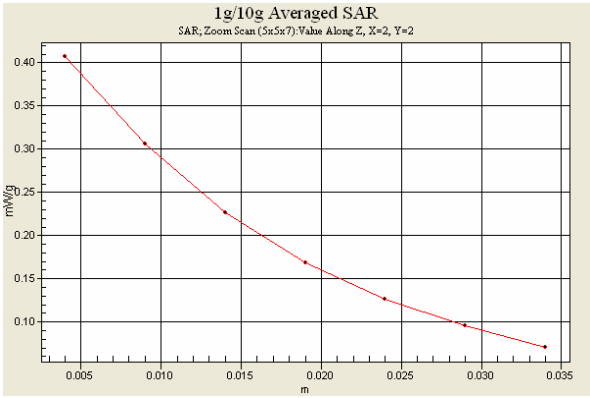

Copyright © 2006 TCC Nokia

Date/Time: 2006-04-18 19:32:08

Test Laboratory: TCC Copenhagen
Type: RM-167; Serial: 004400/89/165220/6

Communication System: 2-slot GPRS850
Frequency: 836.6 MHz; Duty Cycle: 1:4.2
Medium: Body 850; Medium Notes: Medium Temperature: t= 21.6 C
Medium parameters used: f = 837 MHz; σ = 0.973 mho/m; ε_r = 53.6; ρ = 1000 kg/m^3
Phantom section: Flat Section

DASY4 Configuration:
- Probe: ET3DV6 - SN1813; Probe Notes: Advanced Extrapolation
- ConvF(6.18, 6.18, 6.18); Calibrated: 2005-09-19
- Sensor-Surface: 4mm (Mechanical And Optical Surface Detection (Locations From Previous Scan Used))Sensor-Surface: 4mm (Mechanical And Optical Surface Detection)
- Electronics: DAE3 Sn339; Calibrated: 2005-08-17
- Phantom: SAM 2; Type: Twin Phantom; Serial: TP-1037
- Measurement SW: DASY4, V4.6 Build 23; Postprocessing SW: SEMCAD, V1.8 Build 159

Body - Mid - HS-6/Area Scan (51x101x1): Measurement grid: dx=15mm, dy=15mm
Maximum value of SAR (interpolated) = 0.248 mW/g

Body - Mid - HS-6/Zoom Scan (5x5x7) (5x5x7)/Cube 0: Measurement grid: dx=7.5mm, dy=7.5mm, dz=5mm
Reference Value = 8.09 V/m; Power Drift = -0.027 dB
Peak SAR (extrapolated) = 0.307 W/kg
SAR(1 g) = 0.231 mW/g; SAR(10 g) = 0.164 mW/g
Maximum value of SAR (measured) = 0.245 mW/g

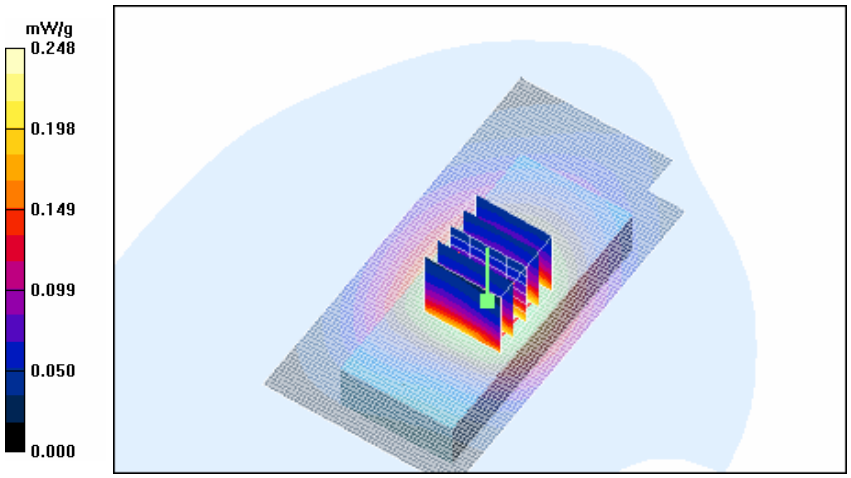

Copyright © 2006 TCC Nokia

Date/Time: 2006-04-24 16:47:34

Test Laboratory: TCC Copenhagen
Type: RM-167; Serial: 004400/89/165220/6

Communication System: GSM 1900
Frequency: 1880 MHz; Duty Cycle: 1:8.3
Medium: Body 1900; Medium Notes: Medium Temperature: t=21.4 C
Medium parameters used: f = 1880 MHz; σ = 1.55 mho/m; ε_r = 54.8; ρ = 1000 kg/m^3
Phantom section: Flat Section

DASY4 Configuration:
- Probe: ET3DV6 - SN1813; Probe Notes: Advanced Extrapolation
- ConvF(4.36, 4.36, 4.36); Calibrated: 2005-09-19
- Sensor-Surface: 4mm (Mechanical And Optical Surface Detection)
- Electronics: DAE3 Sn339; Calibrated: 2005-08-17
- Phantom: SAM 3; Type: Twin Phantom; Serial: TP-1302
- Measurement SW: DASY4, V4.6 Build 23; Postprocessing SW: SEMCAD, V1.8 Build 159

Body - Middle - No Accessory/Zoom Scan (5x5x7) (5x5x7)/Cube 0: Measurement grid: dx=7.5mm, dy=7.5mm, dz=5mm
Reference Value = 13.1 V/m; Power Drift = -0.020 dB
Peak SAR (extrapolated) = 0.506 W/kg
SAR(1 g) = 0.336 mW/g; SAR(10 g) = 0.208 mW/g
Maximum value of SAR (measured) = 0.367 mW/g

Body - Middle - No Accessory/Area Scan (51x101x1): Measurement grid: dx=15mm, dy=15mm
Maximum value of SAR (interpolated) = 0.376 mW/g

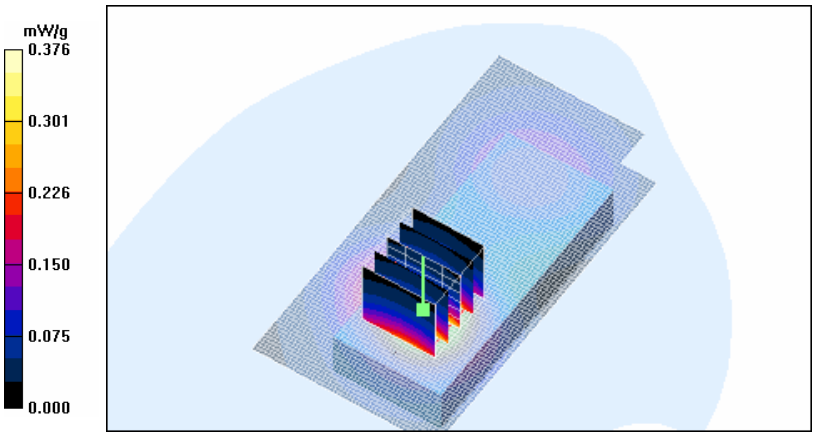

Copyright © 2006 TCC Nokia

Date/Time: 2006-04-24 17:30:23

Test Laboratory: TCC Copenhagen
Type: RM-167; Serial: 004400/89/165220/6

Communication System: 2-slot GPRS1900
Frequency: 1850.2 MHz; Duty Cycle: 1:4.2
Medium: Body 1900; Medium Notes: Medium Temperature: t=21.4 C
Medium parameters used (interpolated): f = 1850.2 MHz; σ = 1.52 mho/m; ε_r = 54.9; ρ = 1000 kg/m^3
Phantom section: Flat Section

DASY4 Configuration:
- Probe: ET3DV6 - SN1813; Probe Notes: Advanced Extrapolation
- ConvF(4.36, 4.36, 4.36); Calibrated: 2005-09-19
- Sensor-Surface: 4mm (Mechanical And Optical Surface Detection (Locations From Previous Scan Used))Sensor-Surface: 4mm (Mechanical And Optical Surface Detection)
- Electronics: DAE3 Sn339; Calibrated: 2005-08-17
- Phantom: SAM 3; Type: Twin Phantom; Serial: TP-1302
- Measurement SW: DASY4, V4.6 Build 23; Postprocessing SW: SEMCAD, V1.8 Build 159

Body - Low - No Accessory/Area Scan (51x101x1): Measurement grid: dx=15mm, dy=15mm
Info: Interpolated medium parameters used for SAR evaluation.
Maximum value of SAR (interpolated) = 0.460 mW/g

Body - Low - No Accessory/Zoom Scan (5x5x7) (5x5x7)/Cube 0: Measurement grid: dx=7.5mm, dy=7.5mm, dz=5mm
Reference Value = 14.2 V/m; Power Drift = 0.024 dB
Peak SAR (extrapolated) = 0.585 W/kg
SAR(1 g) = 0.405 mW/g; SAR(10 g) = 0.252 mW/g
Info: Interpolated medium parameters used for SAR evaluation.
Maximum value of SAR (measured) = 0.442 mW/g

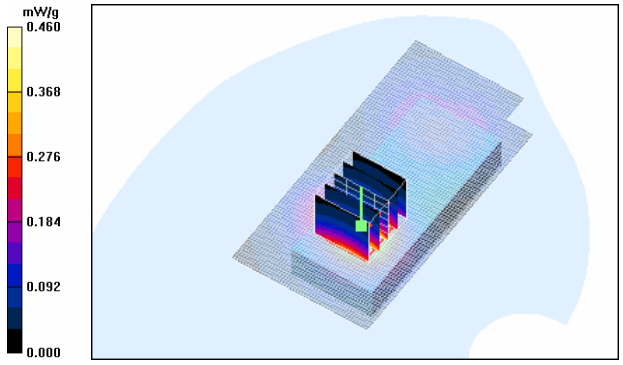

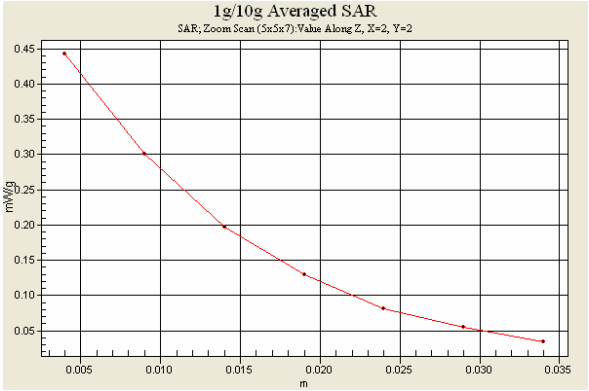

Copyright © 2006 TCC Nokia

Date/Time: 2006-04-24 17:56:25

Test Laboratory: TCC Copenhagen
Type: RM-167; Serial: 004400/89/165220/6

Communication System: 2-slot GPRS1900
Frequency: 1850.2 MHz; Duty Cycle: 1:4.2
Medium: Body 1900; Medium Notes: Medium Temperature: t=21.4 C
Medium parameters used (interpolated): f = 1850.2 MHz; σ = 1.52 mho/m; ε_r = 54.9; ρ = 1000 kg/m^3
Phantom section: Flat Section

DASY4 Configuration:
- Probe: ET3DV6 - SN1813; Probe Notes: Advanced Extrapolation
- ConvF(4.36, 4.36, 4.36); Calibrated: 2005-09-19
- Sensor-Surface: 4mm (Mechanical And Optical Surface Detection (Locations From Previous Scan Used))Sensor-Surface: 4mm (Mechanical And Optical Surface Detection)
- Electronics: DAE3 Sn339; Calibrated: 2005-08-17
- Phantom: SAM 3; Type: Twin Phantom; Serial: TP-1302
- Measurement SW: DASY4, V4.6 Build 23; Postprocessing SW: SEMCAD, V1.8 Build 159

Body - Low - HS-6/Area Scan (51x101x1): Measurement grid: dx=15mm, dy=15mm
Info: Interpolated medium parameters used for SAR evaluation.
Maximum value of SAR (interpolated) = 0.437 mW/g

Body - Low - HS-6/Zoom Scan (5x5x7) (5x5x7)/Cube 0: Measurement grid: dx=7.5mm, dy=7.5mm, dz=5mm
Reference Value = 15.6 V/m; Power Drift = -0.021 dB
Peak SAR (extrapolated) = 0.554 W/kg
SAR(1 g) = 0.384 mW/g; SAR(10 g) = 0.241 mW/g
Info: Interpolated medium parameters used for SAR evaluation.
Maximum value of SAR (measured) = 0.425 mW/g

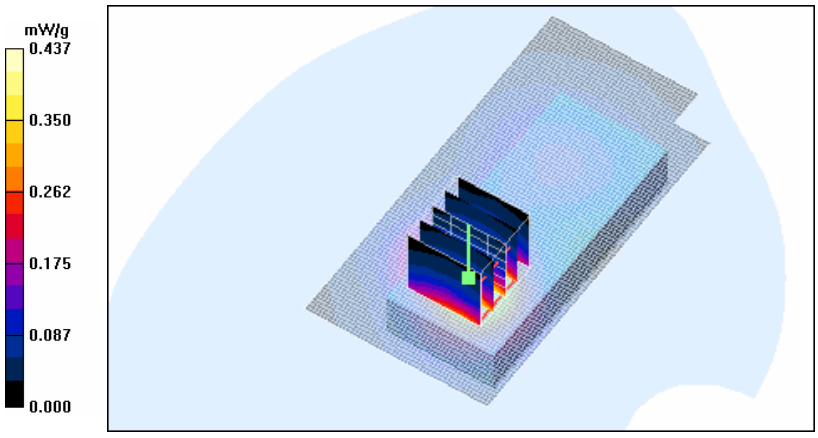

Copyright © 2006 TCC Nokia

APPENDIX C: RELEVANT PAGES FROM PROBE CALIBRATION REPORT(S)

See the following pages.

Copyright © 2006 TCC Nokia

19228

Calibration Laboratory of
Schmid & Partner
Engineering AG
Zeughausstrasse 43, 8004 Zurich, Switzerland

S Schweizerischer Kalibrierdienst
C Service suisse d'étalonnage
Servizio svizzero di taratura
S Swiss Calibration Service

Accredited by the Swiss Federal Office of Metrology and Accreditation
The Swiss Accreditation Service is one of the signatories to the EA Multilateral Agreement for the recognition of calibration certificates

Accreditation No.: SCS 108

Client **Nokia DK**

Certificate No: ET3-1808_Aug05

CALIBRATION CERTIFICATE

Object	ET3DV6 - SN:1808
Calibration procedure(s)	QA CAL-01.v5 Calibration procedure for dosimetric E-field probes
Calibration date:	August 30, 2005
Condition of the calibrated item	In Tolerance

This calibration certificate documents the traceability to national standards, which realize the physical units of measurements (SI).
The measurements and the uncertainties with confidence probability are given on the following pages and are part of the certificate.

All calibrations have been conducted in the closed laboratory facility: environment temperature (22 ± 3)°C and humidity < 70%.

Calibration Equipment used (M&TE critical for calibration)

Primary Standards	ID #	Cal Date (Calibrated by, Certificate No.)	Scheduled Calibration
Power meter E4419B	GB41293874	3-May-05 (METAS, No. 251-00466)	May-06
Power sensor E4412A	MY41495277	3-May-05 (METAS, No. 251-00466)	May-06
Power sensor E4412A	MY41498087	3-May-05 (METAS, No. 251-00466)	May-06
Reference 3 dB Attenuator	SN: S5054 (3c)	11-Aug-05 (METAS, No. 251-00499)	Aug-06
Reference 20 dB Attenuator	SN: S5086 (20b)	3-May-05 (METAS, No. 251-00467)	May-06
Reference 30 dB Attenuator	SN: S5129 (30b)	11-Aug-05 (METAS, No. 251-00500)	Aug-06
Reference Probe ES3DV2	SN: 3013	7-Jan-05 (SPEAG, No. ES3-3013_Jan05)	Jan-06
DAE4	SN: 654	29-Nov-04 (SPEAG, No. DAE4-654_Nov04)	Nov-05

Secondary Standards	ID #	Check Date (in house)	Scheduled Check
RF generator HP 8648C	US3642U01700	4-Aug-99 (SPEAG, in house check Dec-03)	In house check: Dec-05
Network Analyzer HP 8753E	US37390585	18-Oct-01 (SPEAG, in house check Nov-04)	In house check: Nov 05

	Name	Function	Signature
Calibrated by:	Nico Vetterli	Laboratory Technician	N. Vetterli
Approved by:	Katja Pokovic	Technical Manager	

Issued: August 30, 2005

This calibration certificate shall not be reproduced except in full without written approval of the laboratory.

7/9-05

Conversion Factor Assessment

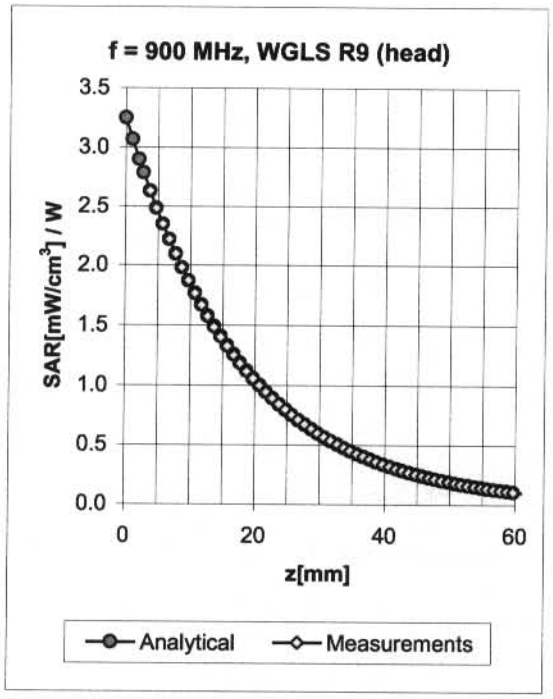

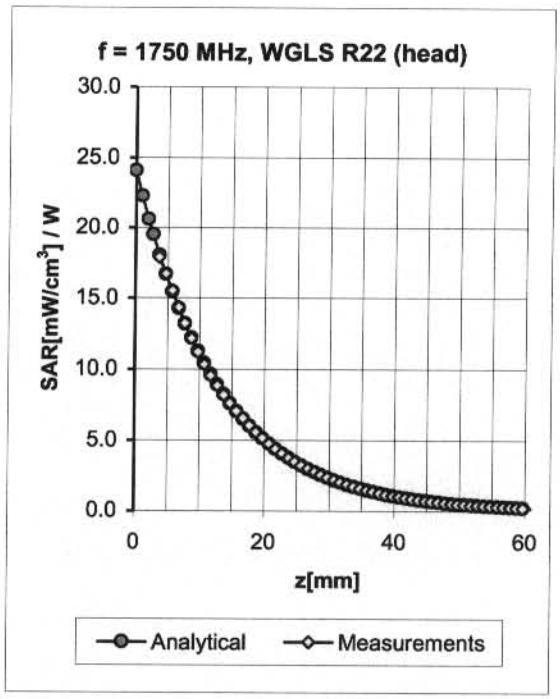

f [MHz]	Validity [MHz][c]	TSL	Permittivity	Conductivity	Alpha	Depth	ConvF Uncertainty
835	± 50 / ± 100	Head	41.5 ± 5%	0.90 ± 5%	0.62	1.73	6.17 ± 11.0% (k=2)
900	± 50 / ± 100	Head	41.5 ± 5%	0.97 ± 5%	0.57	1.83	5.92 ± 11.0% (k=2)
1750	± 50 / ± 100	Head	40.1 ± 5%	1.37 ± 5%	0.58	2.30	4.90 ± 11.0% (k=2)
1900	± 50 / ± 100	Head	40.0 ± 5%	1.40 ± 5%	0.57	2.46	4.78 ± 11.0% (k=2)
1950	± 50 / ± 100	Head	40.0 ± 5%	1.40 ± 5%	0.55	2.54	4.60 ± 11.0% (k=2)
2450	± 50 / ± 100	Head	39.2 ± 5%	1.80 ± 5%	0.70	2.15	4.27 ± 11.8% (k=2)
835	± 50 / ± 100	Body	55.2 ± 5%	0.97 ± 5%	0.47	2.10	6.07 ± 11.0% (k=2)
900	± 50 / ± 100	Body	55.0 ± 5%	1.05 ± 5%	0.47	2.11	5.78 ± 11.0% (k=2)
1750	± 50 / ± 100	Body	53.4 ± 5%	1.49 ± 5%	0.56	2.73	4.26 ± 11.0% (k=2)
1900	± 50 / ± 100	Body	53.3 ± 5%	1.52 ± 5%	0.59	2.66	4.20 ± 11.0% (k=2)
1950	± 50 / ± 100	Body	53.3 ± 5%	1.52 ± 5%	0.59	2.51	4.11 ± 11.0% (k=2)
2450	± 50 / ± 100	Body	52.7 ± 5%	1.95 ± 5%	0.76	1.89	4.02 ± 11.8% (k=2)

[c] The validity of ± 100 MHz only applies for DASY v4.4 and higher (see Page 2). The uncertainty is the RSS of the ConvF uncertainty at calibration frequency and the uncertainty for the indicated frequency band.

Calibration Laboratory of
Schmid & Partner
Engineering AG
Zeughausstrasse 43, 8004 Zurich, Switzerland

S Schweizerischer Kalibrierdienst
C Service suisse d'étalonnage
Servizio svizzero di taratura
S Swiss Calibration Service

Accredited by the Swiss Federal Office of Metrology and Accreditation
The Swiss Accreditation Service is one of the signatories to the EA Multilateral Agreement for the recognition of calibration certificates

Accreditation No.: SCS 108

Client Nokia DK

Certificate No: ET3-1813_Sep05

CALIBRATION CERTIFICATE

Object	ET3DV6 - SN:1813
Calibration procedure(s)	QA CAL-01.v5 Calibration procedure for dosimetric E-field probes
Calibration date:	September 19, 2005
Condition of the calibrated item	In Tolerance

This calibration certificate documents the traceability to national standards, which realize the physical units of measurements (SI).
The measurements and the uncertainties with confidence probability are given on the following pages and are part of the certificate.

All calibrations have been conducted in the closed laboratory facility: environment temperature (22 ± 3)°C and humidity < 70%.

Calibration Equipment used (M&TE critical for calibration)

Primary Standards	ID #	Cal Date (Calibrated by, Certificate No.)	Scheduled Calibration
Power meter E4419B	GB41293874	3-May-05 (METAS, No. 251-00466)	May-06
Power sensor E4412A	MY41495277	3-May-05 (METAS, No. 251-00466)	May-06
Power sensor E4412A	MY41498087	3-May-05 (METAS, No. 251-00466)	May-06
Reference 3 dB Attenuator	SN: S5054 (3c)	11-Aug-05 (METAS, No. 251-00499)	Aug-06
Reference 20 dB Attenuator	SN: S5086 (20b)	3-May-05 (METAS, No. 251-00467)	May-06
Reference 30 dB Attenuator	SN: S5129 (30b)	11-Aug-05 (METAS, No. 251-00500)	Aug-06
Reference Probe ES3DV2	SN: 3013	7-Jan-05 (SPEAG, No. ES3-3013_Jan05)	Jan-06
DAE4	SN: 654	29-Nov-04 (SPEAG, No. DAE4-654_Nov04)	Nov-05

Secondary Standards	ID #	Check Date (in house)	Scheduled Check
RF generator HP 8648C	US3642U01700	4-Aug-99 (SPEAG, in house check Dec-03)	In house check: Dec-05
Network Analyzer HP 8753E	US37390585	18-Oct-01 (SPEAG, in house check Nov-04)	In house check: Nov 05

	Name	Function	Signature
Calibrated by:	Nico Vetterli	Laboratory Technician	N. Vetterli
Approved by:	Katja Pokovic	Technical Manager	

Issued: September 19, 2005

This calibration certificate shall not be reproduced except in full without written approval of the laboratory.

Conversion Factor Assessment

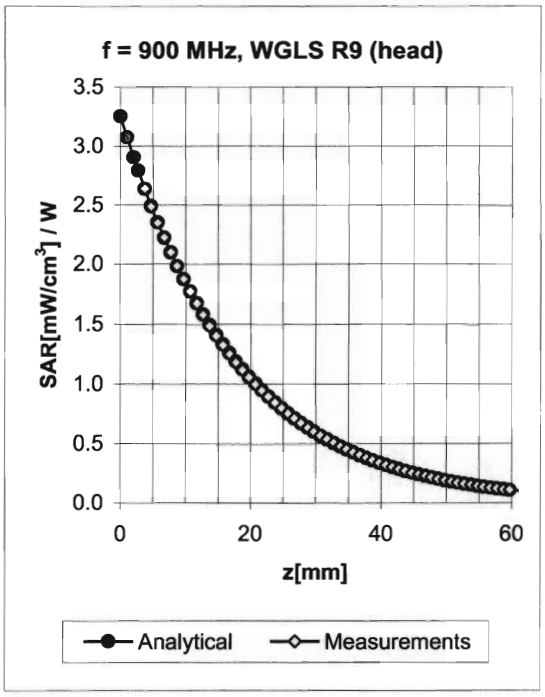

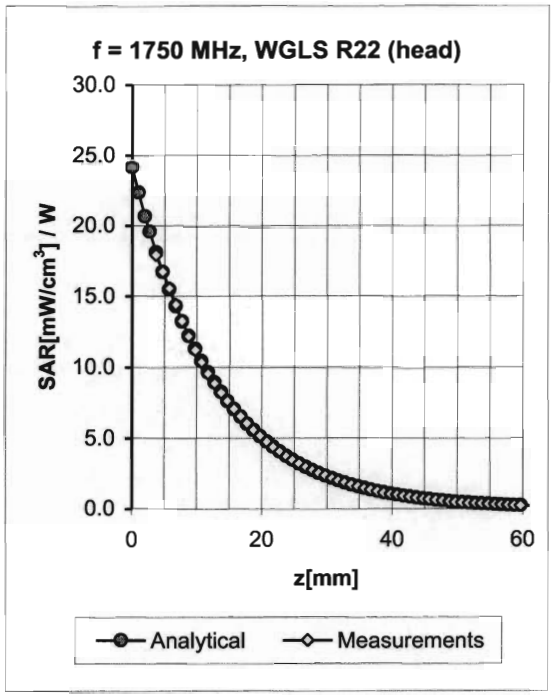

f [MHz]	Validity [MHz][C]	TSL	Permittivity	Conductivity	Alpha	Depth	ConvF Uncertainty
835	± 50 / ± 100	Head	41.5 ± 5%	0.90 ± 5%	0.54	1.87	6.36 ± 11.0% (k=2)
900	± 50 / ± 100	Head	41.5 ± 5%	0.97 ± 5%	0.46	2.06	6.23 ± 11.0% (k=2)
1750	± 50 / ± 100	Head	40.1 ± 5%	1.37 ± 5%	0.60	2.28	5.03 ± 11.0% (k=2)
1900	± 50 / ± 100	Head	40.0 ± 5%	1.40 ± 5%	0.57	2.44	4.89 ± 11.0% (k=2)
1950	± 50 / ± 100	Head	40.0 ± 5%	1.40 ± 5%	0.57	2.48	4.69 ± 11.0% (k=2)
2450	± 50 / ± 100	Head	39.2 ± 5%	1.80 ± 5%	0.70	2.10	4.41 ± 11.8% (k=2)
835	± 50 / ± 100	Body	55.2 ± 5%	0.97 ± 5%	0.49	2.04	6.18 ± 11.0% (k=2)
900	± 50 / ± 100	Body	55.0 ± 5%	1.05 ± 5%	0.44	2.17	5.94 ± 11.0% (k=2)
1750	± 50 / ± 100	Body	53.4 ± 5%	1.49 ± 5%	0.57	2.70	4.44 ± 11.0% (k=2)
1900	± 50 / ± 100	Body	53.3 ± 5%	1.52 ± 5%	0.60	2.64	4.36 ± 11.0% (k=2)
1950	± 50 / ± 100	Body	53.3 ± 5%	1.52 ± 5%	0.61	2.49	4.25 ± 11.0% (k=2)
2450	± 50 / ± 100	Body	52.7 ± 5%	1.95 ± 5%	0.71	2.02	4.09 ± 11.8% (k=2)

[C] The validity of ± 100 MHz only applies for DASY v4.4 and higher (see Page 2). The uncertainty is the RSS of the ConvF uncertainty at calibration frequency and the uncertainty for the indicated frequency band.

APPENDIX D: RELEVANT PAGES FROM DIPOLE VALIDATION KIT REPORT(S)

See the following pages.

Copyright © 2006 TCC Nokia

18308

Calibration Laboratory of
Schmid & Partner
Engineering AG
Zeughausstrasse 43, 8004 Zurich, Switzerland

S Schweizerischer Kalibrierdienst
C Service suisse d'étalonnage
Servizio svizzero di taratura
S Swiss Calibration Service

Accredited by the Swiss Federal Office of Metrology and Accreditation
The Swiss Accreditation Service is one of the signatories to the EA Multilateral Agreement for the recognition of calibration certificates

Accreditation No.: SCS 108

Client Nokia DK 2

Certificate No: D835V2-476_Jan05

CALIBRATION CERTIFICATE

Object	D835V2 - SN: 476
Calibration procedure(s)	QA CAL-05.v6 Calibration procedure for dipole validation kits
Calibration date:	January 18, 2005
Condition of the calibrated item	In Tolerance

This calibration certificate documents the traceability to national standards, which realize the physical units of measurements (SI).
The measurements and the uncertainties with confidence probability are given on the following pages and are part of the certificate.

All calibrations have been conducted in the closed laboratory facility: environment temperature (22 ± 3)°C and humidity < 70%.

Calibration Equipment used (M&TE critical for calibration)

Primary Standards	ID #	Cal Date (Calibrated by, Certificate No.)	Scheduled Calibration
Power meter EPM E442	GB37480704	12-Oct-04 (METAS, No. 251-00412)	Oct-05
Power sensor HP 8481A	US37292783	12-Oct-04 (METAS, No. 251-00412)	Oct-05
Reference 20 dB Attenuator	SN: 5086 (20g)	10-Aug-04 (METAS, No 251-00402)	Aug-05
Reference 10 dB Attenuator	SN: 5047.2 (10r)	10-Aug-04 (METAS, No 251-00402)	Aug-05
Reference Probe ET3DV6	SN 1507	26-Oct-04 (SPEAG, No. ET3-1507_Oct04)	Oct-05
DAE4	SN 601	07-Jan-05 (SPEAG, No. DAE4-601_Jan05)	Jan-06
DAE4	SN 907	03-May-04 (SPEAG, No. DAE4-907_May04)	May-05

Secondary Standards	ID #	Check Date (in house)	Scheduled Check
Power sensor HP 8481A	MY41092317	18-Oct-02 (SPEAG, in house check Oct-03)	In house check: Oct-05
RF generator R&S SML-03	100698	27-Mar-02 (SPEAG, in house check Dec-03)	In house check: Dec-05
Network Analyzer HP 8753E	US37390585 S4206	18-Oct-01 (SPEAG, in house check Nov-04)	In house check: Nov-05

	Name	Function	Signature
Calibrated by:	Judith Müller	Laboratory Technician	
Approved by:	Katja Pokovic	Technical Manager	

Issued: January 19, 2005

This calibration certificate shall not be reproduced except in full without written approval of the laboratory.

28/1-05
DC

DASY4 Validation Report for Head TSL

Date/Time: 01/18/05 14:32:56

Test Laboratory: SPEAG, Zurich, Switzerland

DUT: Dipole 835 MHz; Type: D835V2; Serial: D835V2 - SN476

Communication System: CW-835; Frequency: 835 MHz;Duty Cycle: 1:1
Medium: HSL 900 MHz;
Medium parameters used: f = 835 MHz; σ = 0.91 mho/m; ε_r = 42; ρ = 1000 kg/m^3
Phantom section: Flat Section
Measurement Standard: DASY4 (High Precision Assessment)

DASY4 Configuration:

- Probe: ET3DV6 - SN1507; ConvF(6.24, 6.24, 6.24); Calibrated: 26.10.2004
- Sensor-Surface: 4mm (Mechanical Surface Detection)
- Electronics: DAE4 Sn601; Calibrated: 07.01.2005
- Phantom: Flat Phantom half size; Type: QD000P49AA; Serial: SN:1001;
- Measurement SW: DASY4, V4.4 Build 11; Postprocessing SW: SEMCAD, V1.8 Build 133

Pin = 250 mW; d = 15 mm/Area Scan (81x81x1): Measurement grid: dx=15mm, dy=15mm
Maximum value of SAR (interpolated) = 2.47 mW/g

Pin = 250 mW; d = 15 mm/Zoom Scan (7x7x7)/Cube 0: Measurement grid: dx=5mm, dy=5mm, dz=5mm
Reference Value = 54 V/m; Power Drift = 0.0 dB
Peak SAR (extrapolated) = 3.32 W/kg
SAR(1 g) = 2.27 mW/g; SAR(10 g) = 1.49 mW/g
Maximum value of SAR (measured) = 2.46 mW/g

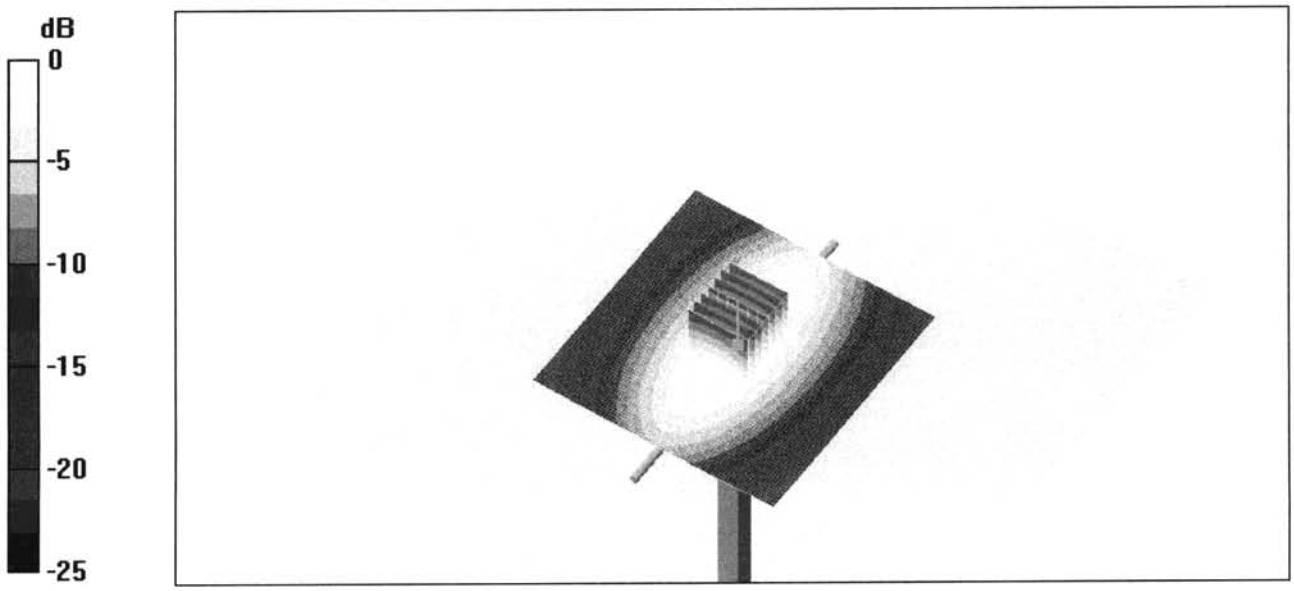

0 dB = 2.46mW/g

DASY4 Validation Report for Body TSL

Date/Time: 01/11/05 10:36:02

Test Laboratory: SPEAG, Zurich, Switzerland

DUT: Dipole 835 MHz; Type: D835V2; Serial: D835V2 - SN476

Communication System: CW-835; Frequency: 835 MHz;Duty Cycle: 1:1
Medium: MSL 900 MHz;
Medium parameters used: f = 835 MHz; σ = 1.01 mho/m; ε_r = 54.9; ρ = 1000 kg/m^3
Phantom section: Flat Section
Measurement Standard: DASY4 (High Precision Assessment)

DASY4 Configuration:

- Probe: ET3DV6 - SN1507; ConvF(5.98, 5.98, 5.98); Calibrated: 26.10.2004
- Sensor-Surface: 4mm (Mechanical Surface Detection)
- Electronics: DAE4 Sn907; Calibrated: 03.05.2004
- Phantom: Flat Phantom 4.9L; Type: QD000P49AA; Serial: 1001;
- Measurement SW: DASY4, V4.4 Build 10; Postprocessing SW: SEMCAD, V1.8 Build 133

Pin = 250 mW; d = 15 mm/Area Scan (81x81x1): Measurement grid: dx=15mm, dy=15mm
Maximum value of SAR (interpolated) = 2.68 mW/g

Pin = 250 mW; d = 15 mm/Zoom Scan (7x7x7)/Cube 0: Measurement grid: dx=5mm, dy=5mm, dz=5mm
Reference Value = 53.7 V/m; Power Drift = 0.0 dB
Peak SAR (extrapolated) = 3.56 W/kg
SAR(1 g) = 2.47 mW/g; SAR(10 g) = 1.62 mW/g
Maximum value of SAR (measured) = 2.67 mW/g

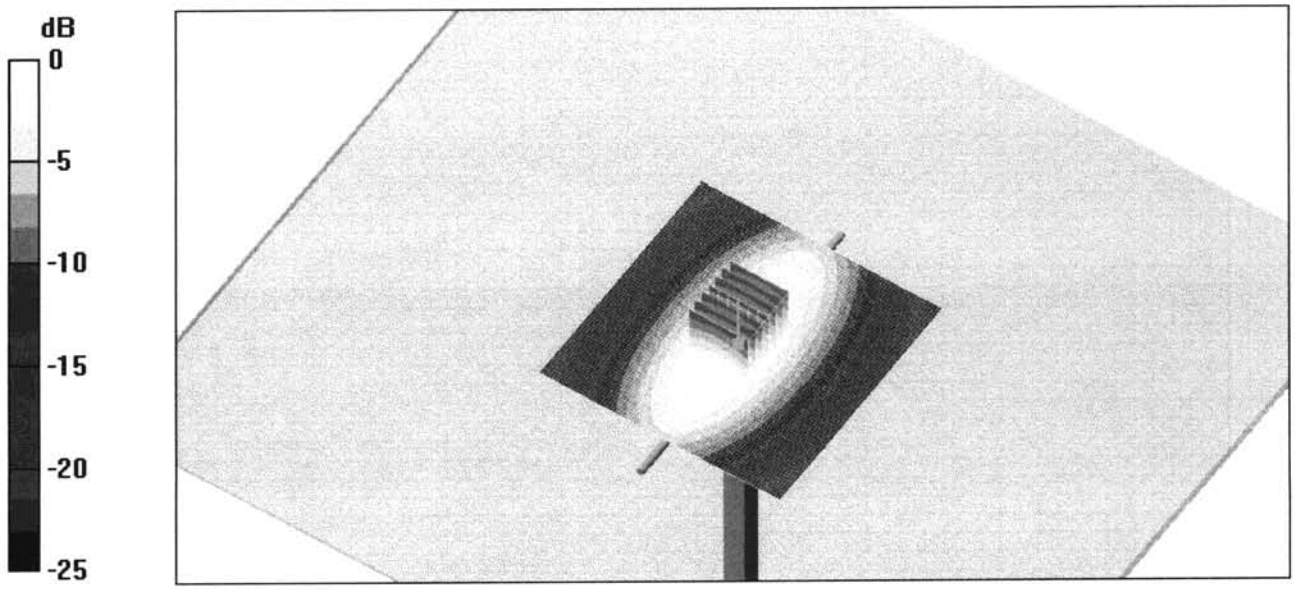

0 dB = 2.67mW/g

Calibration Laboratory of
Schmid & Partner
Engineering AG
Zeughausstrasse 43, 8004 Zurich, Switzerland

S Schweizerischer Kalibrierdienst
C Service suisse d'étalonnage
S Servizio svizzero di taratura
Swiss Calibration Service

Accredited by the Swiss Federal Office of Metrology and Accreditation
The Swiss Accreditation Service is one of the signatories to the EA Multilateral Agreement for the recognition of calibration certificates

Accreditation No.: SCS 108

Client Nokia DK

Certificate No: D1900V2-5d063_Oct05

CALIBRATION CERTIFICATE

Object	D1900V2 - SN: 5d063
Calibration procedure(s)	QA CAL-05.v6 Calibration procedure for dipole validation kits
Calibration date:	October 25, 2005
Condition of the calibrated item	In Tolerance

This calibration certificate documents the traceability to national standards, which realize the physical units of measurements (SI).
The measurements and the uncertainties with confidence probability are given on the following pages and are part of the certificate.

All calibrations have been conducted in the closed laboratory facility: environment temperature (22 ± 3)°C and humidity < 70%.

Calibration Equipment used (M&TE critical for calibration)

Primary Standards	ID #	Cal Date (Calibrated by, Certificate No.)	Scheduled Calibration
Power meter EPM E442	GB37480704	04-Oct-05 (METAS, No. 251-00516)	Oct-06
Power sensor HP 8481A	US37292783	04-Oct-05 (METAS, No. 251-00516)	Oct-06
Reference 20 dB Attenuator	SN: 5086 (20g)	11-Aug-05 (METAS, No 251-00498)	Aug-06
Reference 10 dB Attenuator	SN: 5047.2 (10r)	11-Aug-05 (METAS, No 251-00498)	Aug-06
Reference Probe ET3DV6	SN 1507	26-Oct-04 (SPEAG, No. ET3-1507_Oct04)	Oct-05
DAE4	SN 601	07-Jan-05 (SPEAG, No. DAE4-601_Jan05)	Jan-06

Secondary Standards	ID #	Check Date (in house)	Scheduled Check
Power sensor HP 8481A	MY41092317	18-Oct-02 (SPEAG, in house check Oct-05)	In house check: Oct-07
RF generator R&S SML-03	100698	27-Mar-02 (SPEAG, in house check Dec-03)	In house check: Dec-05
Network Analyzer HP 8753E	US37390585 S4206	18-Oct-01 (SPEAG, in house check Nov-04)	In house check: Nov-05

	Name	Function	Signature
Calibrated by:	Judith Müller	Laboratory Technician	
Approved by:	Katja Pokovic	Technical Manager	

Issued: October 26, 2005

This calibration certificate shall not be reproduced except in full without written approval of the laboratory.

DASY4 Validation Report for Head TSL

Date/Time: 25.10.2005 16:04:03

Test Laboratory: SPEAG, Zurich, Switzerland

DUT: Dipole 1900 MHz; Type: D1900V2; Serial: D1900V2 - SN:5d063

Communication System: CW-1900; Frequency: 1900 MHz;Duty Cycle: 1:1
Medium: HSL 1900 MHz;
Medium parameters used: f = 1900 MHz; σ = 1.48 mho/m; ε_r = 38.6; ρ = 1000 kg/m^3
Phantom section: Flat Section
Measurement Standard: DASY4 (High Precision Assessment)

DASY4 Configuration:

- Probe: ET3DV6 - SN1507; ConvF(4.96, 4.96, 4.96); Calibrated: 26.10.2004
- Sensor-Surface: 4mm (Mechanical Surface Detection)
- Electronics: DAE4 Sn601; Calibrated: 07.01.2005
- Phantom: Flat Phantom 5.0 (front); Type: QD000P50AA; ;
- Measurement SW: DASY4, V4.6 Build 22; Postprocessing SW: SEMCAD, V1.8 Build 159

Pin = 250 mW; d = 10 mm/Area Scan (61x81x1): Measurement grid: dx=15mm, dy=15mm
Maximum value of SAR (interpolated) = 12.1 mW/g

Pin = 250 mW; d = 10 mm/Zoom Scan (7x7x7)/Cube 0: Measurement grid: dx=5mm, dy=5mm, dz=5mm
Reference Value = 93.3 V/m; Power Drift = 0.014 dB
Peak SAR (extrapolated) = 18.0 W/kg
SAR(1 g) = 10.3 mW/g; SAR(10 g) = 5.36 mW/g
Maximum value of SAR (measured) = 11.7 mW/g

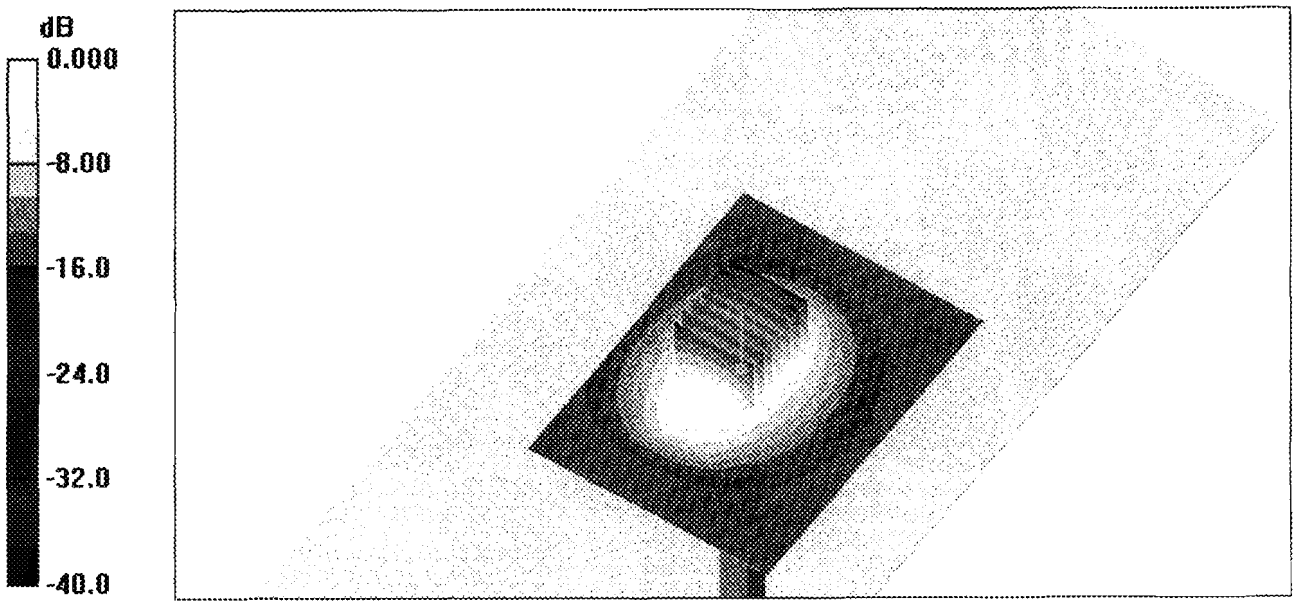

0 dB = 11.7mW/g

Calibration Laboratory of
Schmid & Partner
Engineering AG
Zeughausstrasse 43, 8004 Zurich, Switzerland

S Schweizerischer Kalibrierdienst
C Service suisse d'étalonnage
Servizio svizzero di taratura
S Swiss Calibration Service

Accredited by the Swiss Federal Office of Metrology and Accreditation
The Swiss Accreditation Service is one of the signatories to the EA Multilateral Agreement for the recognition of calibration certificates

Accreditation No.: SCS 108

Client Nokia Denmark

Certificate No: D1900V2-5d063_Jan06

CALIBRATION CERTIFICATE

Object	D1900V2 - SN: 5d063
Calibration procedure(s)	QA CAL-05.v6 Calibration procedure for dipole validation kits
Calibration date:	January 10, 2006
Condition of the calibrated item	In Tolerance

This calibration certificate documents the traceability to national standards, which realize the physical units of measurements (SI).
The measurements and the uncertainties with confidence probability are given on the following pages and are part of the certificate.

All calibrations have been conducted in the closed laboratory facility: environment temperature (22 ± 3)°C and humidity < 70%.

Calibration Equipment used (M&TE critical for calibration)

Primary Standards	ID #	Cal Date (Calibrated by, Certificate No.)	Scheduled Calibration
Power meter EPM-442A	GB37480704	04-Oct-05 (METAS, No. 251-00516)	Oct-06
Power sensor HP 8481A	US37292783	04-Oct-05 (METAS, No. 251-00516)	Oct-06
Reference 20 dB Attenuator	SN: 5086 (20g)	11-Aug-05 (METAS, No 251-00498)	Aug-06
Reference 10 dB Attenuator	SN: 5047.2 (10r)	11-Aug-05 (METAS, No 251-00498)	Aug-06
Reference Probe ET3DV6	SN 1507	28-Oct-05 (SPEAG, No. ET3-1507_Oct05)	Oct-06
DAE4	SN 601	15-Dec-05 (SPEAG, No. DAE4-601_Dec05)	Dec-06

Secondary Standards	ID #	Check Date (in house)	Scheduled Check
Power sensor HP 8481A	MY41092317	18-Oct-02 (SPEAG, in house check Oct-05)	In house check: Oct-07
RF generator Agilent E4421B	MY41000675	11-May-05 (SPEAG, in house check Nov-05)	In house check: Nov-07
Network Analyzer HP 8753E	US37390585 S4206	18-Oct-01 (SPEAG, in house check Nov-05)	In house check: Nov-06

	Name	Function	Signature
Calibrated by:	Judith Müller	Laboratory Technician	
Approved by:	Katja Pokovic	Technical Manager	

Issued: January 17, 2006

This calibration certificate shall not be reproduced except in full without written approval of the laboratory.

DASY4 Validation Report for Body TSL

Date/Time: 10.01.2006 15:46:39

Test Laboratory: SPEAG, Zurich, Switzerland

DUT: Dipole 1900 MHz; Type: D1900V2; Serial: D1900V2 - SN:5d063

Communication System: CW; Frequency: 1900 MHz;Duty Cycle: 1:1
Medium: MSL U10;
Medium parameters used: f = 1900 MHz; σ = 1.53 mho/m; ε_r = 53; ρ = 1000 kg/m^3
Phantom section: Flat Section
Measurement Standard: DASY4 (High Precision Assessment)

DASY4 Configuration:

- Probe: ET3DV6 - SN1507 (HF); ConvF(4.3, 4.3, 4.3); Calibrated: 28.10.2005
- Sensor-Surface: 4mm (Mechanical Surface Detection)
- Electronics: DAE4 Sn601; Calibrated: 15.12.2005
- Phantom: Flat Phantom 4.9L; Type: QD000P49AA; ;
- Measurement SW: DASY4, V4.6 Build 23; Postprocessing SW: SEMCAD, V1.8 Build 160

Pin = 250 mW; d = 10 mm 2/Area Scan (61x71x1): Measurement grid: dx=15mm, dy=15mm
Maximum value of SAR (interpolated) = 13.0 mW/g

Pin = 250 mW; d = 10 mm 2/Zoom Scan (7x7x7)/Cube 0: Measurement grid: dx=5mm, dy=5mm, dz=5mm
Reference Value = 94.2 V/m; Power Drift = -0.036 dB
Peak SAR (extrapolated) = 18.0 W/kg
SAR(1 g) = 10.5 mW/g; SAR(10 g) = 5.6 mW/g
Maximum value of SAR (measured) = 12.0 mW/g

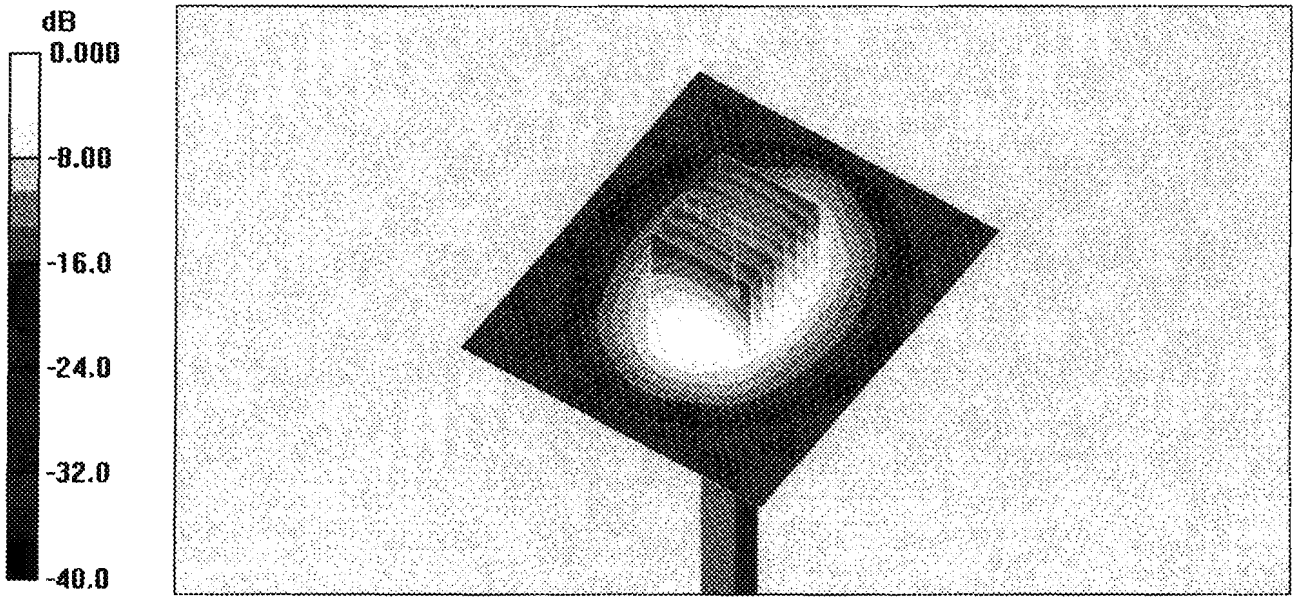

0 dB = 12.0mW/g