CERTIFICATE OF COMPLIANCE
SAR EVALUATION

Test Lab:	**Applicant Information:**
CELLTECH RESEARCH INC. Testing and Engineering Lab 1955 Moss Court Kelowna, B.C. Canada V1Y 9L3 Phone: 250 - 860-3130 Fax: 250 - 860-3110 Toll Free: 1-877-545-6287 e-mail: info@celltechlabs.com web site: www.celtechlabs.com	**SSENTECH CO., LTD.** 14F. Daegak Bldg., 1319-5 Seocho-dong, Seocho-gu, Seoul, Korea Contact: David Kim, Manager Mobile Communication R&D Lab

FCC ID:	**PPPCWH-100**
Model(s):	**CWH-100**
Equipment Type:	**Single-Mode CDMA Cellular Phone**
Classification:	**Licensed Non-Broadcast Transmitter Held to Ear (TNE)**
Tx Frequency Range:	**824.70 - 848.31 MHz**
Rx Frequency Range:	**869.70 - 893.31 MHz**
Max. RF Output Power:	**0.251 Watts (ERP)**
FCC Rule Part(s):	**2.1093; ET Docket 96.326**

This wireless portable device has been shown to be compliant for localized Specific Absorption Rate (SAR) for uncontrolled environment/general exposure limits specified in ANSI/IEEE Std. C95.1-1992 and has been tested in accordance with the measurement procedures specified in ANSI/IEEE Std. C95.3-1999.

I attest to the accuracy of data. All measurements were performed by me or were made under my supervision and are correct to the best of my knowledge and belief. I assume full responsibility for the completeness of these measurements and vouch for the qualifications of all persons taking them.

Celltech Research Inc. certifies that no party to this application has been denied FCC benefits pursuant to Section 5301 of the Anti-Drug Abuse Act of 1988, 21 U.S.C. 853(a).

Shawn McMillen
General Manager
Celltech Research Inc.

© 2001 Celltech Research Inc.

TABLE OF CONTENTS

1.0 **INTRODUCTION**…… 1

2.0 **DESCRIPTION OF EUT**……..……..…… 1

3.0 **SAR MEASUREMENT SYSTEM** …… 2

4.0 **MEASUREMENT SUMMARY**……..……... 3-5

5.0 **SAR LIMITS**…… 6

6.0 **DETAILS OF SAR EVALUATION**……. 6

7.0 **EVALUATION PROCEDURES**……..…….. 7

8.0 **SYSTEM VALIDATION**……..... 7

9.0 **SIMULATED EQUIVALENT TISSUES**……..……. 8

10.0 **TISSUE PARAMETERS**…… 8

11.0 **SYSTEM SPECIFICATIONS**.……... 9

12.0 **TEST EQUIPMENT LIST**……..…… 10

13.0 **MEASUREMENT UNCERTAINTIES**……. 11

14.0 **REFERENCES**……. 12

APPENDIX A - SAR MEASUREMENT DATA……...……. 13
APPENDIX B - DIPOLE VALIDATION……..……. 14
APPENDIX C - PROBE CALIBRATION……..…… 15
APPENDIX D - SAR TEST SETUP PHOTOGRAPHS…… 16

© 2001 Celltech Research Inc.

1.0 INTRODUCTION

This measurement report shows compliance of the SSENTECH CO., LTD. Model: CWH-100 Single-Mode CDMA Cellular Phone FCC ID: PPPCWH-100 with FCC Part 2.1093, ET Docket 96-326 Rules for mobile and portable devices. The test procedures, as described in American National Standards Institute C95.1-1992 (1), FCC OET Bulletin 65-1997 were employed. A description of the product and operating configuration, detailed summary of the test results, methodology and procedures used in the evaluation, equipment used, and the various provisions of the rules are included within this test report.

2.0 DESCRIPTION of Equipment Under Test (EUT)

EUT Type	Single-Mode CDMA Cellular Phone	**FCC ID**	PPPCWH-100
Equipment Class	Licensed Non-Broadcast Transmitter Held to Ear (TNE)	**Model No.(s)**	CWH-100
FCC Rule Part(s)	§ 2.1093, Docket 96-326	**Application Type**	Part 22 Certification
Tx Frequency Range (MHz)	824.70 - 848.31	**S/N No.**	Pre-production
Rx Frequency Range (MHz)	869.70 - 893.31	**Max. RF Output Power**	0.251 Watts (ERP)
Modulation	CDMA	**Battery Type(s)**	Slim: 3.7V Lithium Polymer Standard: 3.7V Lithium Ion
Antenna Type	Retractable Whip	**Antenna Length**	91 mm

Belt-Holster

Front of EUT

Right Side of EUT

Left Side of EUT

Back of EUT

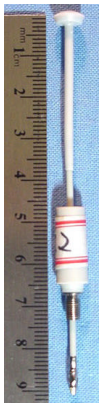
Antenna

3.0 SAR MEASUREMENT SYSTEM

Celltech Research SAR measurement facility utilizes the Dosimetric Assessment System (DASY™) manufactured by Schmid & Partner Engineering AG (SPEAG™) of Zurich, Switzerland. The DASY system is comprised of the robot controller, computer, near-field probe, probe alignment sensor, and the generic twin phantom containing brain or muscle equivalent material. The robot is a six-axis industrial robot performing precise movements to position the probe to the location (points) of maximum electromagnetic field (EMF). A cell controller system contains the power supply, robot controller, teach pendant (Joystick), and remote control, is used to drive the robot motors. The Staubli robot is connected to the cell controller to allow software manipulation of the robot. A data acquisition electronic (DAE) circuit performs the signal amplification, signal multiplexing, AD-conversion, offset measurements, mechanical surface detection, collision detection, etc. is connected to the Electro-optical coupler (EOC). The EOC performs the conversion from the optical into digital electric signal of the DAE and transfers data to the PC plug-in card. The DAE3 utilizes a highly sensitive electrometer-grade preamplifier with auto-zeroing, a channel and gain-switching multiplexer, a fast 16 bit AD-converter and a command decoder and control logic unit. Transmission to the PC-card is accomplished through an optical downlink for data and status information and an optical uplink for commands and clock lines. The mechanical probe-mounting device includes two different sensor systems for frontal and sidewise probe contacts. They are also used for mechanical surface detection and probe collision detection. The robot uses its own controller with a built in VME-bus computer.

DASY3 SAR Measurement System

4.0 MEASUREMENT SUMMARY

The measurement results were obtained with the EUT tested in the conditions described in this report. Detailed measurement data and plots showing the maximum SAR location of the EUT are reported in Appendix A.

HEAD SAR MEASUREMENT RESULTS

Freq. (MHz)	Channel	Modulation	Conducted Power (dBm)	Battery Type	Antenna Position	Phantom Section	SAR (w/kg)
824.70	1013	CDMA	24.8	Slim	Retracted	Left Ear	0.963
824.70	1013	CDMA	24.8	Slim	Extended	Left Ear	1.18
835.89	363	CDMA	24.8	Slim	Retracted	Left Ear	1.01
835.89	363	CDMA	24.8	Slim	Extended	Left Ear	1.35
848.31	777	CDMA	24.8	Slim	Retracted	Left Ear	0.878
848.31	777	CDMA	24.8	Slim	Extended	Left Ear	1.13
835.89	363	CDMA	24.8	Extended	Extended	Left Ear	1.21
Mixture Type: BRAIN Dielectric Constant: 0.90 Conductivity: 41.5			**ANSI / IEEE C95.1 1992 - SAFETY LIMIT Spatial Peak Uncontrolled Exposure/General Population BRAIN: 1.6 W/kg (averaged over 1 gram)**				

Notes:
1. The SAR values found were below the maximum limit of 1.6 w/kg.
2. The highest head SAR value found was 1.35 w/kg.

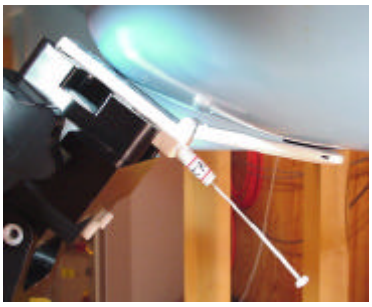

Head SAR Test Setup

MEASUREMENT SUMMARY (CONT.)

BODY SAR MEASUREMENT RESULTS

Freq. (MHz)	Channel	Modulation	Conducted Power (dBm)	Phantom Section	Battery Type	Separation Distance (cm)	Antenna Position	SAR (w/kg)
824.70	1013	CDMA	24.8	Flat	Slim	1.4	Retracted	0.933
824.70	1013	CDMA	24.8	Flat	Slim	1.4	Extended	1.22
835.89	363	CDMA	24.8	Flat	Slim	1.4	Retracted	0.831
835.89	363	CDMA	24.8	Flat	Slim	1.4	Extended	1.37
848.31	777	CDMA	24.8	Flat	Slim	1.4	Retracted	0.868
848.31	777	CDMA	24.8	Flat	Slim	1.4	Extended	1.21
835.89	363	CDMA	24.8	Flat	Extended	1.4	Extended	1.23
Mixture Type: Muscle Dielectric Constant: 56.1 Conductivity: 0.95			**ANSI / IEEE C95.1 1992 - SAFETY LIMIT Spatial Peak Uncontrolled Exposure/General Population BODY: 1.6 W/kg (averaged over 1 gram)**					

Notes:

1. The SAR values found were below the maximum limit of 1.6 w/kg.
2. The highest body SAR value found was 1.37 w/kg.
3. The EUT was tested for body-worn SAR with the belt-holster providing a 1.4cm separation distance between the back of the phone and the outer surface of the planar phantom.

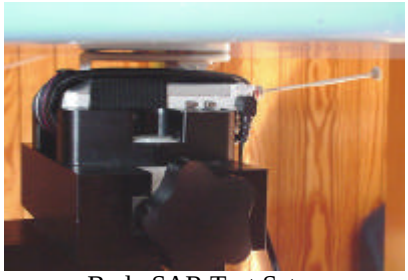

Body SAR Test Setup
with 1.4cm Belt-Holster

MEASUREMENT SUMMARY (CONT.)

HAND SAR MEASUREMENT RESULTS

Freq. (MHz)	Channel	Modulation	Conducted Power (dBm)	Phantom Section	Battery Type	Separation Distance (cm)	Antenna Position	SAR (w/kg)
835.89	363	CDMA	24.8	Flat	Slim	0.0	Retracted	0.871
835.89	363	CDMA	24.8	Flat	Slim	0.0	Extended	1.39
835.89	363	CDMA	24.8	Flat	Extended	0.0	Extended	1.25
Mixture Type: Muscle Dielectric Constant: 56.1 Conductivity: 0.95			**ANSI / IEEE C95.1 1992 - SAFETY LIMIT Spatial Peak Uncontrolled Exposure/General Population BODY: 4.0 W/kg (averaged over 10 grams)**					

Notes:

4. The SAR values found were below the maximum limit of 4.0 w/kg.
5. The highest hand SAR value found was 1.39 w/kg.
6. The EUT was tested for hand SAR with the back of the phone touching the outer surface of the planar phantom.

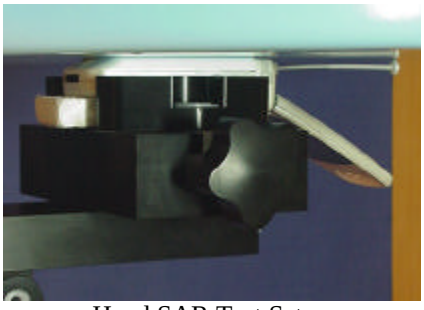

Hand SAR Test Setup
Back of EUT Touching Phantom Surface

5.0 SAR SAFETY LIMITS

EXPOSURE LIMITS (General Population / Uncontrolled Exposure Environment)	**SAR** (W/Kg)
Spatial Average (averaged over the whole body)	0.08
Spatial Peak (averaged over any 1g of tissue)	1.60
Spatial Peak (hands/wrists/feet/ankles averaged over 10g)	4.00

Notes: 1. The FCC SAR safety limits specified in the table above apply to devices operated in the General Population / Uncontrolled Exposure environment.
2. Uncontrolled environments are defined as locations where there is exposure of individuals who have no knowledge or control of their exposure.

6.0 DETAILS OF SAR EVALUATION

The SSENTECH CO., LTD. Model: CWH-100 Single-Mode CDMA Cellular Phone FCC ID: PPPCWH-100 was found to be compliant for localized Specific Absorption Rate (SAR) based on the following test provisions and conditions:

1) The handset was placed in a normal operating position with the center of the ear-piece aligned with the ear canal on the phantom.
2) With the ear-piece touching the phantom, the center line of the handset was aligned with an imaginary plane (X and Y axis) consisting of three lines connecting both ears and the mouth.
3) The handset was gradually moved towards the cheek until any point of the mouth-piece or keypad touched the cheek.
4) The EUT was tested in a body-worn configuration with the belt-holster providing a 1.4cm separation distance between the back of the phone and the outer surface of the planar phantom.
5) The EUT was tested in a hand-held configuration with the back of the phone touching the outer surface of the planar phantom.
6) SAR measurements were evaluated at maximum power and the unit was operated for an appropriate period prior to the evaluation in order to minimize drift. The conducted power level was checked before and after each test.
7) The EUT was keyed to operate continuously in the transmit mode for the duration of the test.
8) The location of the maximum spatial SAR distribution (Hot Spot) was determined relative to the handset and its antenna.
9) The EUT was tested with a fully charged battery.

7.0 EVALUATION PROCEDURES

The Specific Absorption Rate (SAR) evaluation was performed in the following manner:

a. (i) The evaluation was performed in an applicable area of the phantom depending on the type of device being tested. For devices held to the ear during normal operation, both the left and right ear positions were evaluated at the center frequency of the band at maximum power. The ear position that produced the greatest SAR determined which side of the phantom would be used for the entire evaluation. FCC OET Bulletin 65 Supplement C dictated the positioning of the ear-held device relative to the phantom.

(ii) For face-held and body-worn devices, or devices which can be operated within 20cm of the body, the planar section of the phantom was used. The type of device being evaluated determined the distance of the EUT to the outer surface of the planar phantom.

b. The SAR was determined by a pre-defined procedure within the DASY3 software. Upon completion of a reference and optical surface check, the exposed region of the phantom was scanned near the inner surface with a grid spacing of 20mm x 20mm.

c. For frequencies below 500MHz a 4x4x7 matrix was performed around the greatest spatial SAR distribution found during the area scan of the applicable exposed region. For frequencies above 500MHz a 5x5x7 matrix was performed. SAR values were then calculated using a 3-D spline interpolation algorithm and averaged over spatial volumes of 1 and 10 grams.

d. If the EUT had any appreciable drift over the course of the evaluation, then the EUT was re-evaluated. Any unusual anomalies over the course of the test also warranted a re-evaluation.

8.0 SYSTEM VALIDATION

Prior to the assessment, the system was verified in the planar region of the phantom. For devices operating below 1GHz, an 835MHz dipole or 900MHz was used, depending on the operating frequency of the EUT. For devices operating above 1GHz, an 1800MHz dipole was used. A forward power of 250mW was applied to the dipole, and the system was verified to a tolerance of ±3%. The applicable verification is as follows (see Appendix B for validation test plot):

Dipole Validation Kit	Target SAR 1g (w/kg)	Measured SAR 1g (w/kg)	
D835V2	2.06	2.04 (6/1/01)	2.02 (6/4/01)

9.0 SIMULATED TISSUES

The brain and muscle mixtures consist of a viscous gel using hydroxethylcellulose (HEC) gelling agent and saline solution. Preservation with a bactericide is added and visual inspection is made to ensure air bubbles are not trapped during the mixing process. The fluid was prepared according to standardized procedures, and measured for dielectric parameters (permitivity and conductivity).

INGREDIENT	MIXTURE - 835MHz		
	Brain % (Validation)	Brain %	Muscle %
Water	40.1	41.45	52.4
Sugar	58.1	56.0	45.0
Salt	0.7	1.45	1.4
HEC	1.0	1.0	1.0
Bactericide	0.1	0.1	0.2

10.0 TISSUE PARAMETERS

The dielectric parameters of the fluids were verified prior to the SAR evaluation using an 85070C Dielectric Probe Kit and an 8753E Network Analyzer. The dielectric parameters of the fluid are as follows:

Equivalent Tissue (835MHz)	Dielectric Constant e_r	Conductivity s (mho/m)	r (Kg/m^3)
Brain (Validation)	44.2 ± 5%	0.80 ± 10%	1000
Brain	41.5 ± 5%	0.90 ± 10%	1000
Muscle	56.1 ± 5%	0.95 ± 10%	1000

11.0 ROBOT SYSTEM SPECIFICATIONS

Specifications

POSITIONER:	Stäubli Unimation Corp. Robot Model: RX60L
Repeatability:	0.02 mm
No. of axis:	6

Data Acquisition Electronic (DAE) System

Cell Controller

Processor:	Pentium III
Clock Speed:	450 MHz
Operating System:	Windows NT
Data Card:	DASY3 PC-Board

Data Converter

Features:	Signal Amplifier, multiplexer, A/D converter, and control logic
Software:	DASY3 software
Connecting Lines:	Optical downlink for data and status info. Optical uplink for commands and clock

PC Interface Card

Function:	24 bit (64 MHz) DSP for real time processing Link to DAE3 16 bit A/D converter for surface detection system serial link to robot direct emergency stop output for robot

E-Field Probe

Model:	ET3DV6
Serial No.:	1387
Construction:	Triangular core fiber optic detection system
Frequency:	10 MHz to 6 GHz
Linearity:	± 0.2 dB (30 MHz to 3 GHz)

Phantom

Phantom:	Generic Twin
Shell Material:	Fiberglass
Thickness:	2.0 ± 0.1 mm

12.0 TEST EQUIPMENT LIST

SAR MEASUREMENT SYSTEM		
EQUIPMENT	***SERIAL NO.***	***CALIBRATION DATE***
DASY3 System -Robot -ET3DV6 E-Field Probe -DAE -835MHz Validation Dipole -900MHz Validation Dipole -1800MHz Validation Dipole -Generic Twin Phantom V3.0	 599396-01 1387 383 411 054 247 N/A	 N/A Sept 1999 Sept 1999 Aug 1999 Aug 1999 Aug 1999 N/A
85070C Dielectric Probe Kit	N/A	N/A
Gigatronics 8652A Power Meter -Power Sensor 80701A -Power Sensor 80701A	1835272 1833535 1833542	Oct 1999 Oct 1999 Oct 1999
E4408B Spectrum Analyzer	US39240170	Nov 1999
8594E Spectrum Analyzer	3543A02721	Mar 2000
8753E Network Analyzer	US38433013	Nov 1999
8648D Signal Generator	3847A00611	N/A
5S1G4 Amplifier Research Power Amplifier	26235	N/A

13.0 MEASUREMENT UNCERTAINTIES

Uncertainty Description	Error	Distribution	Weight	Standard Deviation	Offset
Probe Uncertainty					
Axial isotropy	±0.2 dB	U-Shaped	0.5	±2.4 %	
Spherical isotropy	±0.4 dB	U-Shaped	0.5	±4.8 %	
Isotropy from gradient	±0.5 dB	U-Shaped	0	±	
Spatial resolution	±0.5 %	Normal	1	±0.5 %	
Linearity error	±0.2 dB	Rectangle	1	±2.7 %	
Calibration error	±3.3 %	Normal	1	±3.3 %	
SAR Evaluation Uncertainty					
Data acquisition error	±1 %	Rectangle	1	±0.6 %	
ELF and RF disturbances	±0.25 %	Normal	1	±0.25 %	
Conductivity assessment	±10 %	Rectangle	1	±5.8 %	
Spatial Peak SAR Evaluation Uncertainty					
Extrapolated boundary effect	±3 %	Normal	1	±3 %	±5 %
Probe positioning error	±0.1 mm	Normal	1	±1 %	
Integrated and cube orientation	±3 %	Normal	1	±3 %	
Cube Shape inaccuracies	±2 %	Rectangle	1	±1.2 %	
Device positioning	±6 %	Normal	1	±6 %	
Combined Uncertainties				±11.7 %	±5 %

Measurement uncertainties in SAR measurements are difficult to quantify due to several variables including biological, physiological, and environmental. However, the estimated measurement uncertainties in SAR are less than 15-25 %.

According to ANSI/IEEE C95.3, the overall uncertainties are difficult to assess and will vary with the type of meter and usage situation. However, accuracy's of ± 1 to 3 dB can be expected in practice, with greater uncertainties in near-field situations and at higher frequencies (shorter wavelengths), or areas where large reflecting objects are present. Under optimum measurement conditions, SAR measurement uncertainties of at least ± 2dB can be expected.

According to CENELEC, typical worst-case uncertainty of field measurements is ± 5 dB.
For well-defined modulation characteristics the uncertainty can be reduced to ± 3 dB.

14.0 REFERENCES

(1) ANSI, *ANSI/IEEE C95.1: IEEE Standard for Safety Levels with Respect to Human Exposure to Radio Frequency Electromagnetic Fields, 3kHz to 300 Ghz, The Institute of Electrical and Electronics Engineers, Inc., New York, NY 10017, 1992;*

(2) Federal Communications Commission, "Evaluating Compliance with FCC Guidelines for Human Exposure to Radio frequency Electromagnetic Fields", OET Bulletin 65, FCC, Washington, D.C. 20554, 1997;

(3) Thomas Schmid, Oliver Egger, and Neils Kuster, "Automated E-field scanning system for dosimetric assessments", IEEE *Transaction on Microwave Theory and Techniques,* Vol. 44, pp. 105 – 113, January, 1996.

(4) Niels Kuster, Ralph Kastle, and Thomas Schmid, "Dosimetric evaluation of mobile communications equipment with know precision", IEICE Transactions of Communications, vol. E80-B, no. 5, pp. 645 – 652, May 1997.

APPENDIX A - SAR MEASUREMENT DATA

Ssentech Co., Ltd. FCC ID: PPPCWH-100

Generic Twin Phantom; Left Cheek Section; Position: (72°,65°)
Probe: ET3DV6 - SN1387; ConvF(6.43,6.43,6.43); Crest factor: 1.0
835MHz Brain: σ = 0.90 mho/m ε_r = 41.5 ρ = 1.00 g/cm^3
Coarse: Dx = 15.0, Dy = 15.0, Dz = 10.0;
Cube 5x5x7
SAR (1g): 0.963 mW/g, SAR (10g): 0.627 mW/g

Head SAR
Ssentech Model: CWH-100
CDMA Mode - Antenna In
Channel 1013 [824.70 MHz]
Conducted Power 24.8 dBm
Date Tested: June 1, 2001

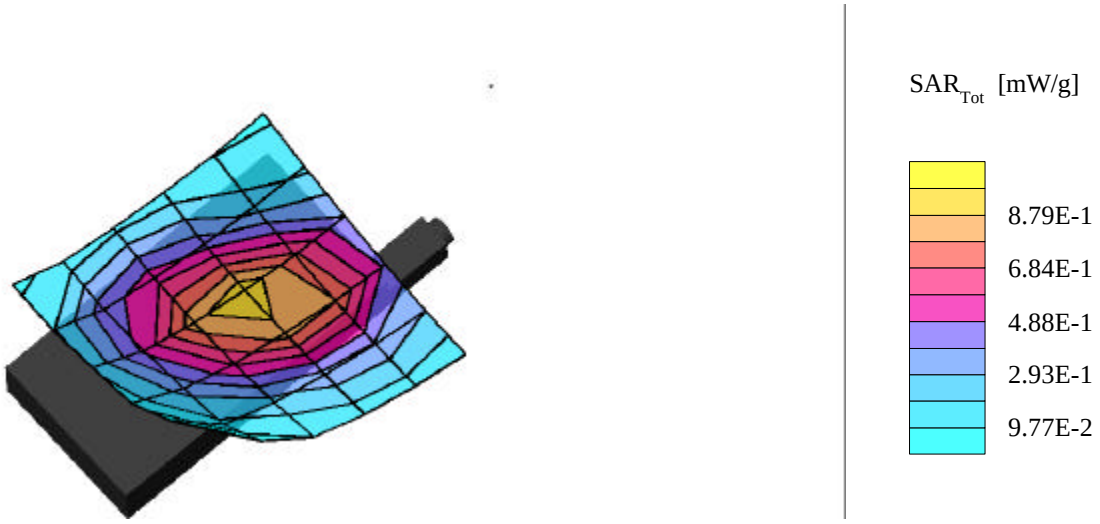

Ssentech Co., Ltd. FCC ID: PPPCWH-100

Generic Twin Phantom; Left Cheek Section; Position: (72°,65°)
Probe: ET3DV6 - SN1387; ConvF(6.43,6.43,6.43); Crest factor: 1.0
835MHz Brain: σ = 0.90 mho/m ε_r = 41.5 ρ = 1.00 g/cm^3
Coarse: Dx = 15.0, Dy = 15.0, Dz = 10.0;
Cube 5x5x7
SAR (1g): 1.18 mW/g, SAR (10g): 0.769 mW/g

Head SAR
Ssentech Model: CWH-100
CDMA Mode - Antenna Out
Channel 1013 [824.70 MHz]
Conducted Power 24.8 dBm
Date Tested: June 1, 2001

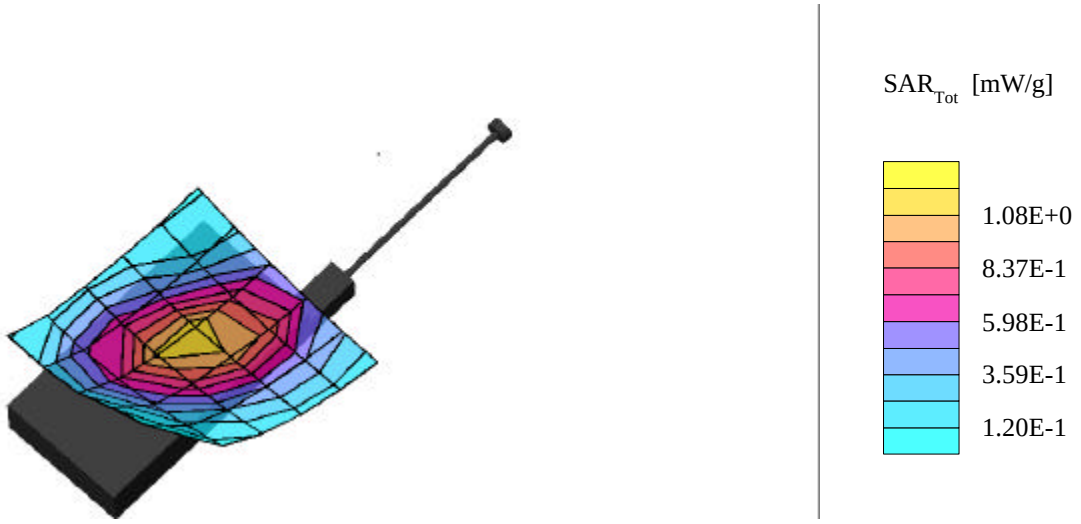

Ssentech Co., Ltd. FCC ID: PPPCWH-100

Generic Twin Phantom; Left Cheek Section; Position: (72°,65°)
Probe: ET3DV6 - SN1387; ConvF(6.43,6.43,6.43); Crest factor: 1.0
835MHz Brain: σ = 0.90 mho/m ε_r = 41.5 ρ = 1.00 g/cm^3
Coarse: Dx = 15.0, Dy = 15.0, Dz = 10.0;
Cube 5x5x7
SAR (1g): 1.01 mW/g, SAR (10g): 0.646 mW/g

Head SAR
Ssentech Model: CWH-100
CDMA Mode - Antenna In
Channel 363 [835.89 MHz]
Conducted Power 24.8 dBm
Date Tested: June 1, 2001

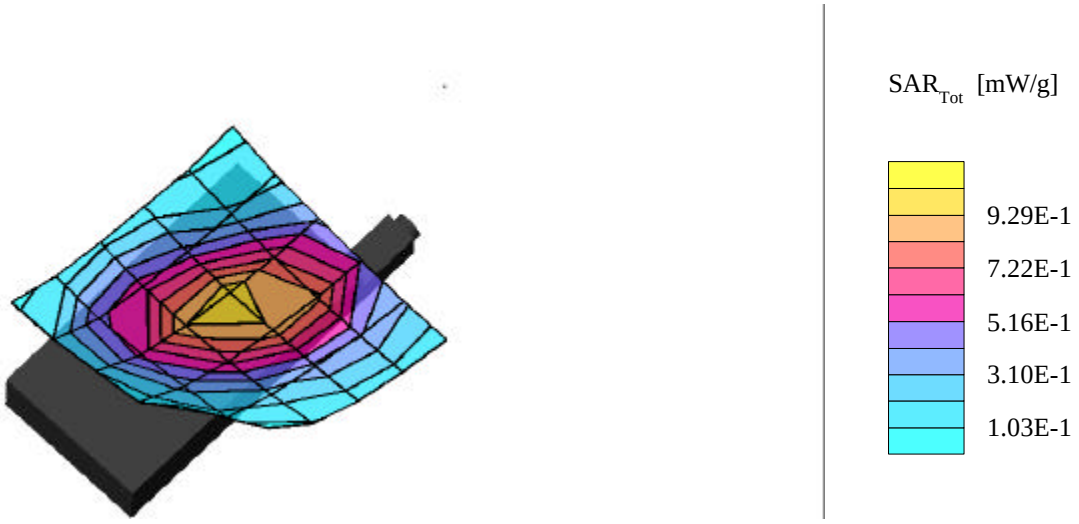

Ssentech Co., Ltd. FCC ID: PPPCWH-100

Generic Twin Phantom; Left Cheek Section; Position: (72°,65°)
Probe: ET3DV6 - SN1387; ConvF(6.43,6.43,6.43); Crest factor: 1.0
835MHz Brain: σ = 0.90 mho/m ε_r = 41.5 ρ = 1.00 g/cm^3
Coarse: Dx = 15.0, Dy = 15.0, Dz = 10.0;
Cube 5x5x7
SAR (1g): 1.35 mW/g, SAR (10g): 0.869 mW/g

Head SAR
Ssentech Model: CWH-100
CDMA Mode - Antenna Out
Channel 363 [835.89 MHz]
Conducted Power 24.8 dBm
Date Tested: June 1, 2001

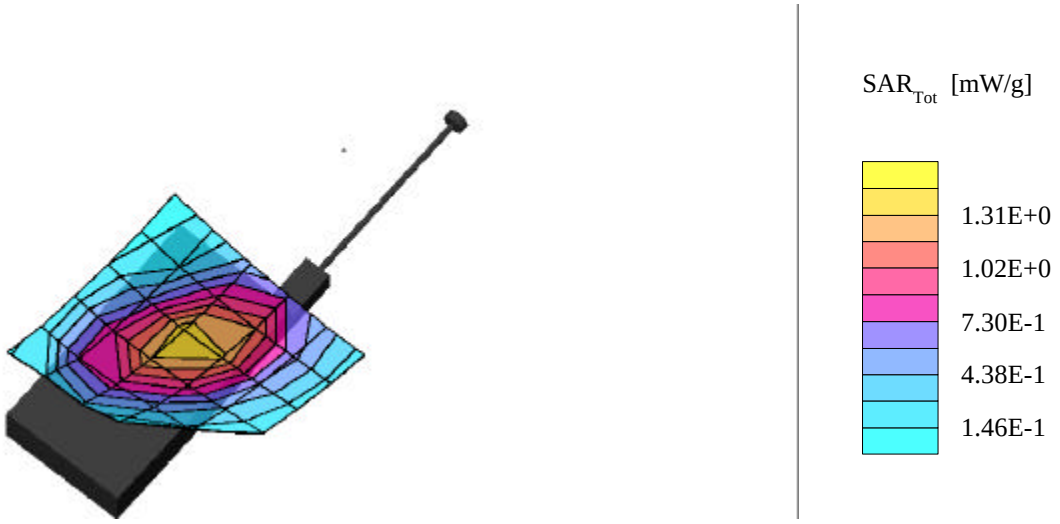

Ssentech Co., Ltd. FCC ID:PPPCWH-100

Generic Twin Phantom; Left Cheek Section; Position: (72°,65°)
Probe: ET3DV6 - SN1387; ConvF(6.43,6.43,6.43); Crest factor: 1.0
835MHz Brain: σ = 0.90 mho/m ε_r = 41.5 ρ = 1.00 g/cm^3
Coarse: Dx = 15.0, Dy = 15.0, Dz = 10.0;
Cube 5x5x7
SAR (1g): 0.878 mW/g, SAR (10g): 0.572 mW/g

Head SAR
Ssentech Model: CWH-100
CDMA Mode - Antenna In
Channel 777 [848.31 MHz]
Conducted Power 24.8 dBm
Date Tested: June 1, 2001

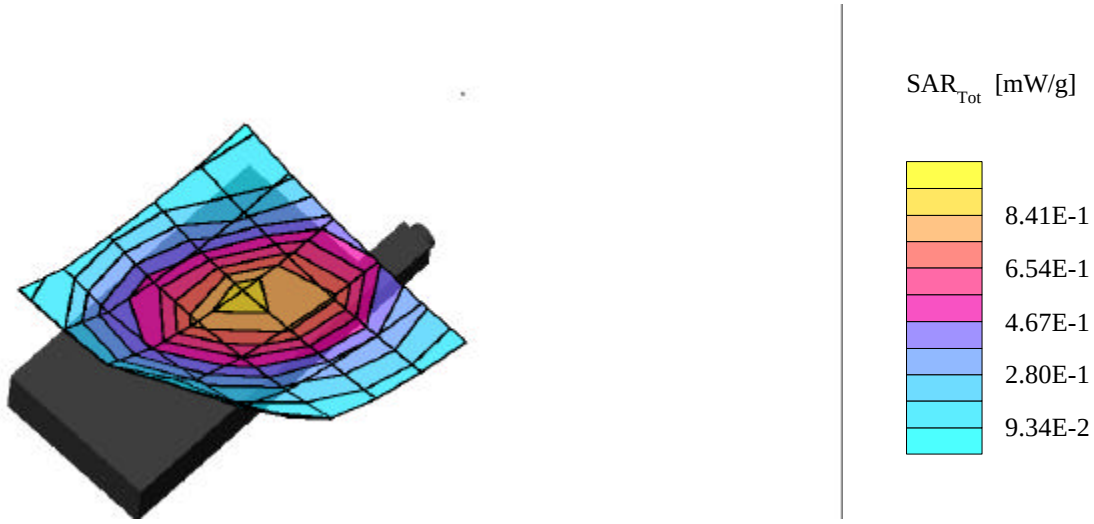

Ssentech Co., Ltd. FCC ID: PPPCWH-100

Generic Twin Phantom; Left Cheek Section; Position: (72°,65°)
Probe: ET3DV6 - SN1387; ConvF(6.43,6.43,6.43); Crest factor: 1.0
835MHz Brain: σ = 0.90 mho/m ε_r = 41.5 ρ = 1.00 g/cm^3
Coarse: Dx = 15.0, Dy = 15.0, Dz = 10.0;
Cube 5x5x7
SAR (1g): 1.13 mW/g, SAR (10g): 0.737 mW/g

Head SAR
Ssentech Model: CWH-100
CDMA Mode - Antenna Out
Channel 777 [848.31 MHz]
Conducted Power 24.8 dBm
Date Tested: June 1, 2001

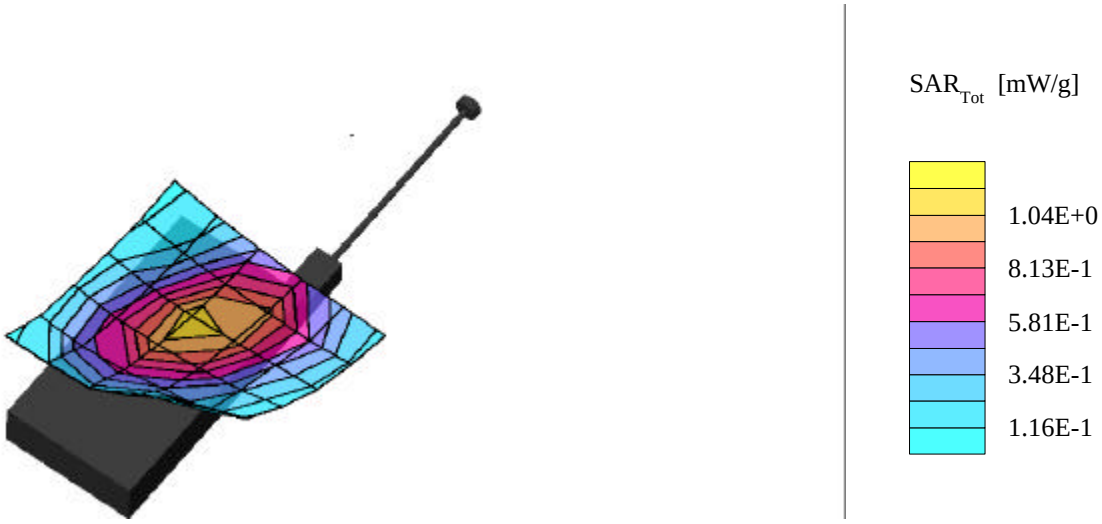

Ssentech Co., Ltd. FCC ID: PPPCWH-100

Generic Twin Phantom; Left Cheek Section; Position: (72°,65°)
Probe: ET3DV6 - SN1387; ConvF(6.43,6.43,6.43); Crest factor: 1.0
835MHz Brain: σ = 0.90 mho/m ε_r = 41.5 ρ = 1.00 g/cm^3
Coarse: Dx = 15.0, Dy = 15.0, Dz = 10.0;
Cube 5x5x7
SAR (1g): 1.21 mW/g, SAR (10g): 0.729 mW/g

Head SAR
Extended Battery
Ssentech Model: CWH-100
CDMA Mode - Antenna Out
Channel 363 [835.89 MHz]
Conducted Power 24.8 dBm
Date Tested: June 1, 2001

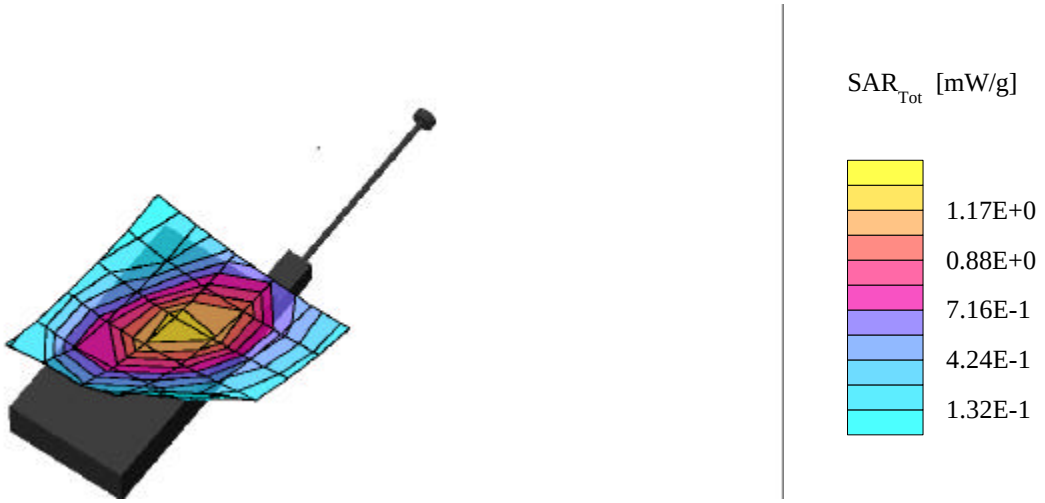

Ssentech Co., Ltd. FCC ID: PPPCWH-100

Generic Twin Phantom; Flat Section; Position: (270°,270°)
Probe: ET3DV6 - SN1387; ConvF(6.43,6.43,6.43); Crest factor: 1.0
Muscle 835 MHz: σ = 0.95 mho/m ε_r = 56.1 ρ = 1.00 g/cm^3
Coarse: Dx = 20.0, Dy = 20.0, Dz = 10.0;
Cube 5x5x7
SAR (1g): 0.933 mW/g, SAR (10g): 0.628 mW/g

Body-Worn SAR with 1.4cm Belt-Holster
Ssentech Model: CWH-100
CDMA Mode - Antenna In
Channel 1013 [824.70 MHz]
Conducted Power: 24.8 dBm
Date Tested: June 4, 2001

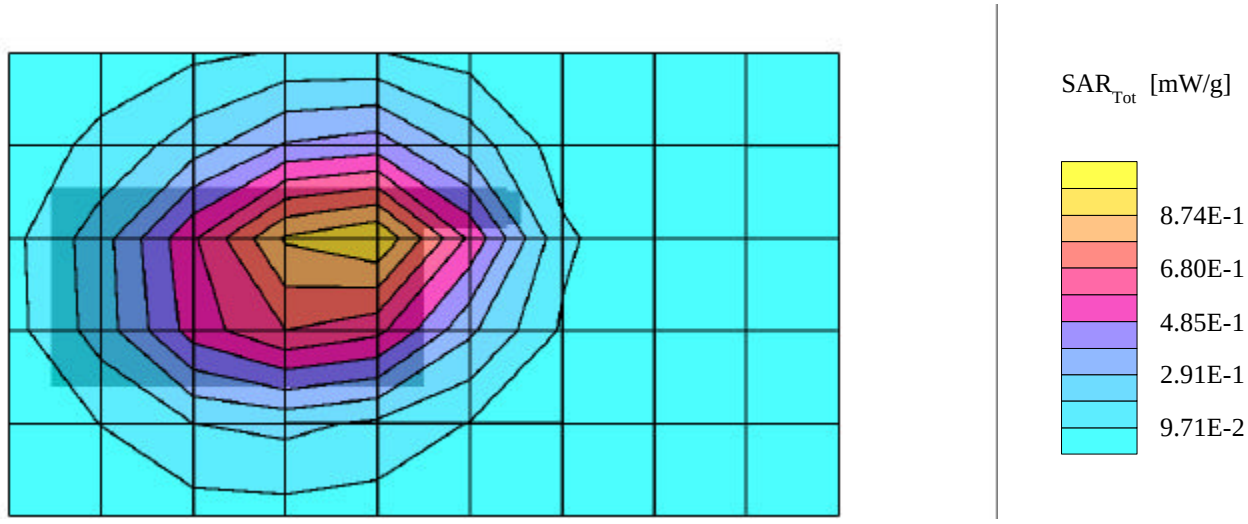

Ssentech Co., Ltd. FCC ID: PPPCWH-100

Generic Twin Phantom; Flat Section; Position: (270°,270°)
Probe: ET3DV6 - SN1387; ConvF(6.43,6.43,6.43); Crest factor: 1.0
Muscle 835 MHz: σ = 0.95 mho/m ε_r = 56.1 ρ = 1.00 g/cm^3
Coarse: Dx = 20.0, Dy = 20.0, Dz = 10.0;
Cube 5x5x7
SAR (1g): 1.22 mW/g, SAR (10g): 0.826 mW/g

Body-Worn SAR with 1.4cm Belt-Holster
Ssentech Model: CWH-100
CDMA Mode - Antenna Out
Channel 1013 [824.70 MHz]
Conducted Power: 24.8 dBm
Date Tested: June 4, 2001

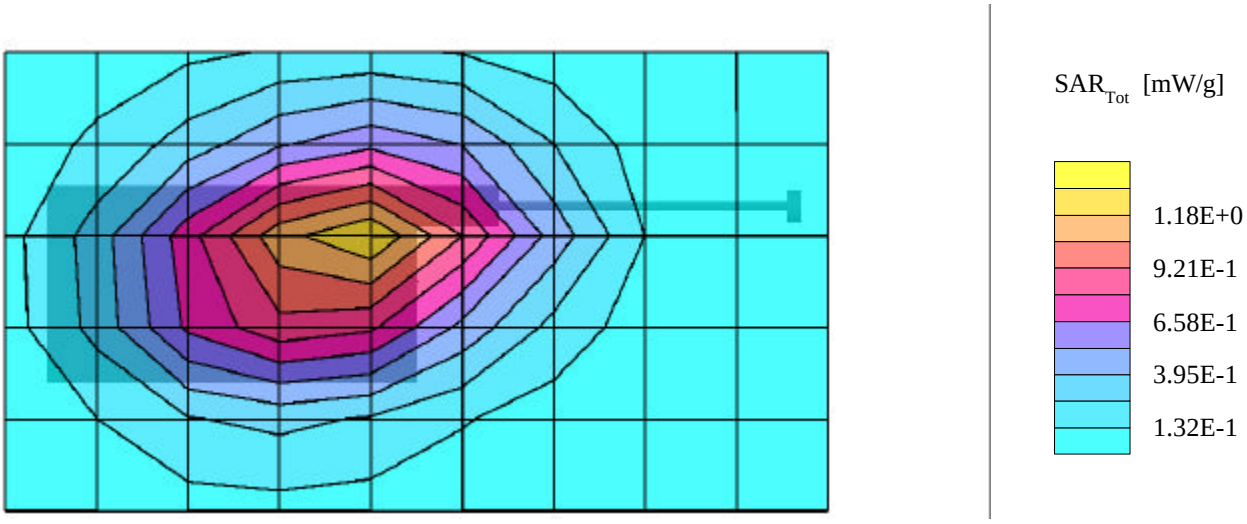

Ssentech Co., Ltd. FCC ID: PPPCWH-100

Generic Twin Phantom; Flat Section; Position: (270°,270°)
Probe: ET3DV6 - SN1387; ConvF(6.43,6.43,6.43); Crest factor: 1.0
Muscle 835 MHz: σ = 0.95 mho/m ε_r = 56.1 ρ = 1.00 g/cm^3
Coarse: Dx = 20.0, Dy = 20.0, Dz = 10.0;
Cube 5x5x7
SAR (1g): 0.831 mW/g, SAR (10g): 0.560 mW/g

Body-Worn SAR with 1.4cm Belt-Holster
Ssentech Model: CWH-100
CDMA Mode - Antenna In
Channel 363 [835.89 MHz]
Conducted Power: 24.8 dBm
Date Tested: June 4, 2001

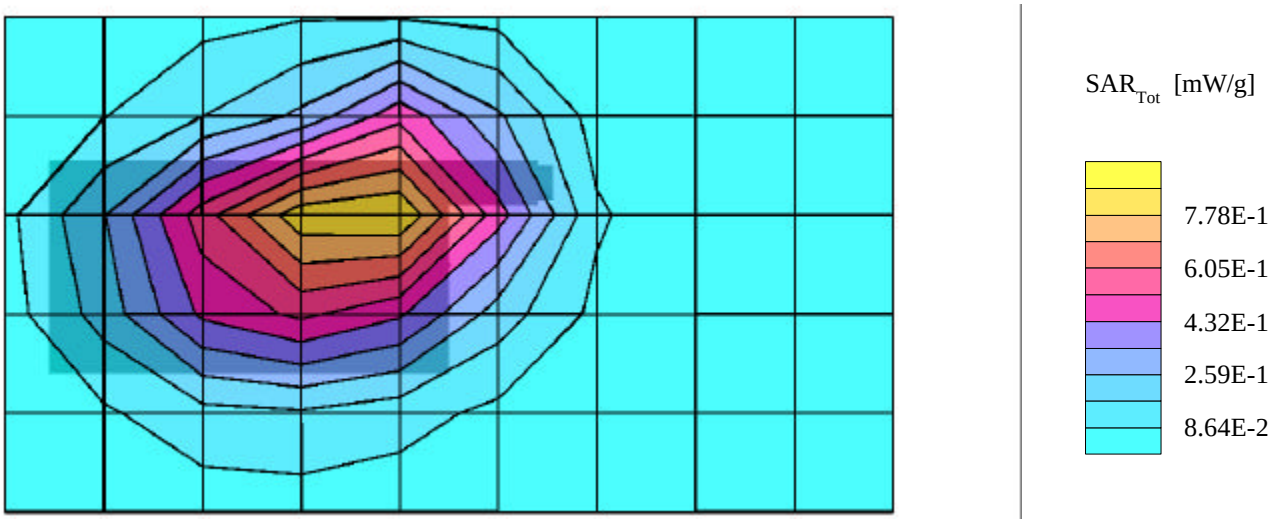

Ssentech Co., Ltd. FCC ID: PPPCWH-100

Generic Twin Phantom; Flat Section; Position: (270°,270°)
Probe: ET3DV6 - SN1387; ConvF(6.43,6.43,6.43); Crest factor: 1.0
Muscle 835 MHz: σ = 0.95 mho/m ε_r = 56.1 ρ = 1.00 g/cm^3
Coarse: Dx = 20.0, Dy = 20.0, Dz = 10.0;
Cube 5x5x7
SAR (1g): 1.37 mW/g, SAR (10g): 0.928 mW/g

Body-Worn SAR with 1.4cm Belt-Holster
Ssentech Model: CWH-100
CDMA Mode - Antenna Out
Channel 363 [835.89 MHz]
Conducted Power: 24.8 dBm
Date Tested: June 1, 2001

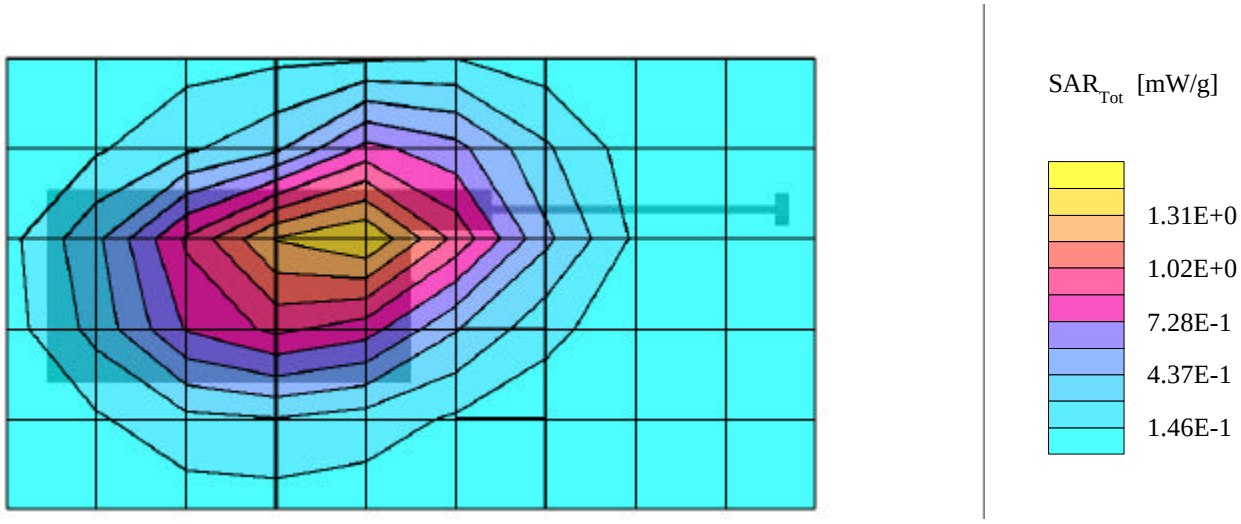

Ssentech Co., Ltd. FCC ID: PPPCWH-100

Generic Twin Phantom; Flat Section; Position: (270°,270°)
Probe: ET3DV6 - SN1387; ConvF(6.43,6.43,6.43); Crest factor: 1.0
Muscle 835 MHz: σ = 0.95 mho/m ε_r = 56.1 ρ = 1.00 g/cm^3
Coarse: Dx = 20.0, Dy = 20.0, Dz = 10.0;
Cube 5x5x7
SAR (1g): 0.868 mW/g, SAR (10g): 0.583 mW/g

Body-Worn SAR with 1.4cm Belt-Holster
Ssentech Model: CWH-100
CDMA Mode - Antenna In
Channel 777 [848.31 MHz]
Conducted Power: 24.8 dBm
Date Tested: June 4, 2001

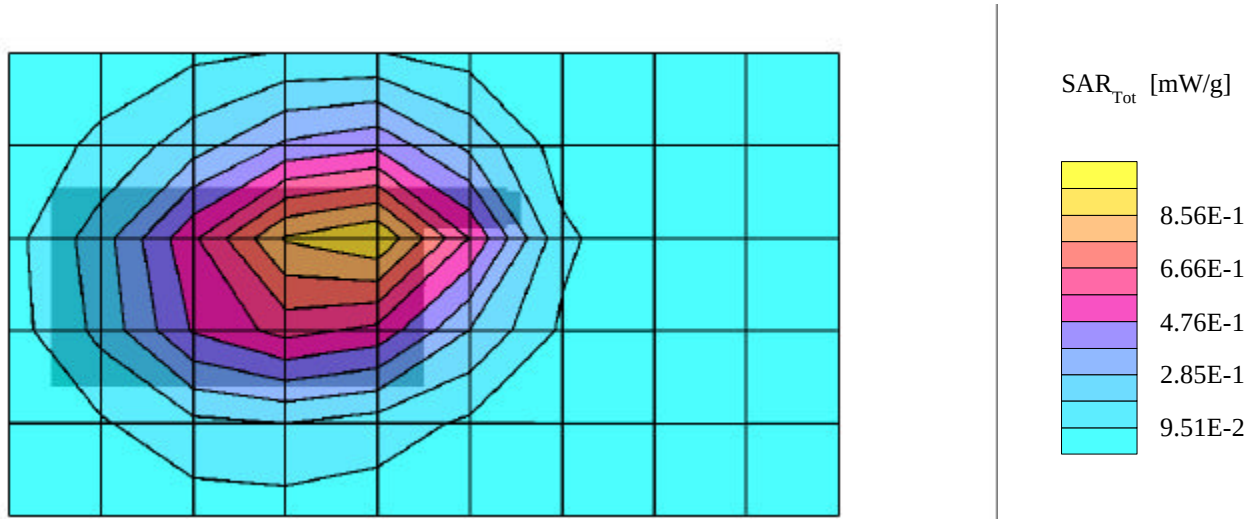

Ssentech Co., Ltd. FCC ID: PPPCWH-100

Generic Twin Phantom; Flat Section; Position: (270°,270°)
Probe: ET3DV6 - SN1387; ConvF(6.43,6.43,6.43); Crest factor: 1.0
Muscle 835 MHz: σ = 0.95 mho/m ε_r = 56.1 ρ = 1.00 g/cm^3
Coarse: Dx = 20.0, Dy = 20.0, Dz = 10.0;
Cube 5x5x7
SAR (1g): 1.21 mW/g, SAR (10g): 0.819 mW/g

Body-Worn SAR with 1.4cm Belt-Holster
Ssentech Model: CWH-100
CDMA Mode - Antenna Out
Channel 777 [848.31 MHz]
Conducted Power: 24.8 dBm
Date Tested: June 4, 2001

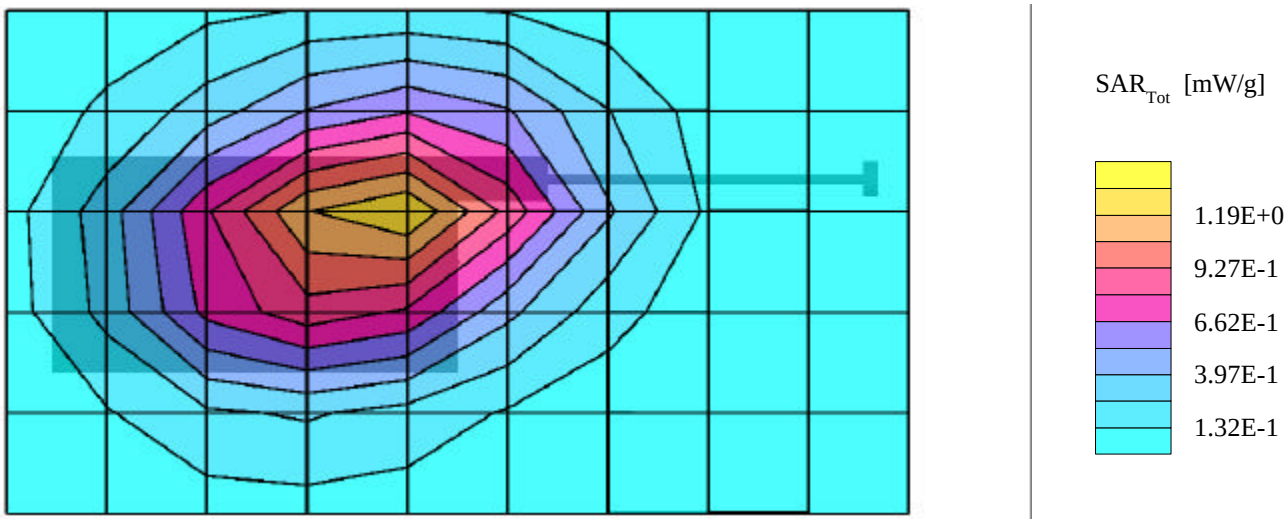

Ssentech Co., Ltd. FCC ID: PPPCWH-100

Generic Twin Phantom; Flat Section; Position: (270°,270°)
Probe: ET3DV6 - SN1387; ConvF(6.43,6.43,6.43); Crest factor: 1.0
Muscle 835 MHz: σ = 0.95 mho/m ε_r = 56.1 ρ = 1.00 g/cm^3
Coarse: Dx = 20.0, Dy = 20.0, Dz = 10.0;
Cube 5x5x7
SAR (1g): 1.23 mW/g, SAR (10g): 0.788 mW/g

Body-Worn SAR with 1.4cm Belt-Holster
With Extended Battery
Ssentech Model: CWH-100
CDMA Mode - Antenna Out
Channel 363 [835.89 MHz]
Conducted Power: 24.8 dBm
Date Tested: June 4, 2001

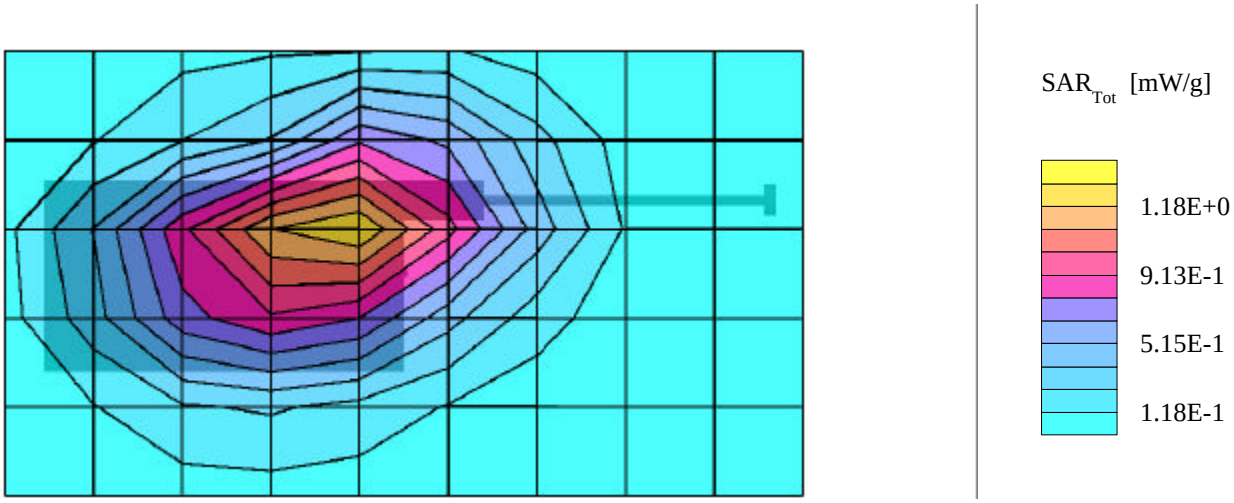

Ssentech Co., Ltd. FCC ID: PPPCWH-100

Generic Twin Phantom; Flat Section; Position: (270°,270°)
Probe: ET3DV6 - SN1387; ConvF(6.43,6.43,6.43); Crest factor: 1.0
Muscle 835 MHz: σ = 0.95 mho/m ε_r = 56.1 ρ = 1.00 g/cm^3
Coarse: Dx = 20.0, Dy = 20.0, Dz = 10.0;
Cube 5x5x7
SAR (10g): 0.871 mW/g
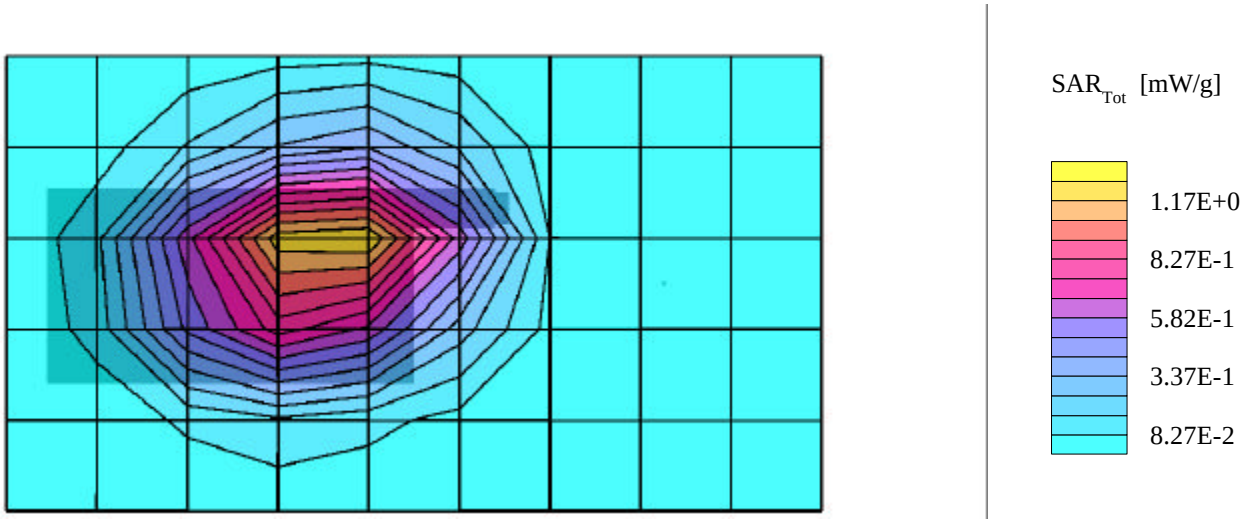
Hand SAR
Ssentech Model: CWH-100
CDMA Mode - Antenna In
Channel 363 [835.89 MHz]
Conducted Power: 24.8 dBm
Date Tested: June 4, 2001