FCC TEST REPORT

Test report
On Behalf of
Shenzhen Eternity Technology Co., Ltd
For
SMART PHONE
Model No.: S601

FCC ID: PQ4IPROS601

Prepared for : **HONG KONG IPRO TECHNOLOGY CO.,LIMITED**
12/F,3 LOCKHART ROAD,WANCHAI ,HK

Prepared By : **Shenzhen Tongzhou Testing Co.,Ltd**
1th Floor, Building 1, Haomai High-tech Park, Huating Road 387, Dalang Street, Longhua, Shenzhen, China

Date of Test: **2020/9/16 ~ 2020/10/16**

Date of Report: **2020/10/16**

Report Number: **TZ200901677-E5**

The test report apply only to the specific sample(s) tested under stated test conditions
It is not permitted to copy extracts of these test result without the written permission of the test laboratory.

TEST RESULT CERTIFICATION

Applicant's name ..... : **HONG KONG IPRO TECHNOLOGY CO.,LIMITED**

Address..... : 12/F,3 LOCKHART ROAD,WANCHAI ,HK

Manufacture's Name ..... : **HONG KONG IPRO TECHNOLOGY CO.,LIMITED**

Address..... : 12/F,3 LOCKHART ROAD,WANCHAI ,HK

Product description

Trade Mark ..... : IPRO

Product name..... : SMART PHONE

Model and/or type reference . : S601

Standards ..... : FCC Rules and Regulations Part 22 & Part 24 & Part 27
ANSI C63.26:2015

This publication may be reproduced in whole or in part for non-commercial purposes as long as the Shenzhen Shenzhen Tongzhou Testing Co.,Ltd Testing Technology Co., Ltd. is acknowledged as copyright owner and source of the material. Shenzhen Shenzhen Tongzhou Testing Co.,Ltd Testing Technology Co., Ltd. takes no responsibility for and will not assume liability for damages resulting from the reader's interpretation of the reproduced material due to its placement and context.

Date of Test .....:

Date (s) of performance of tests .....: **2020/9/16 ~ 2020/10/16**

Date of Issue .....: **2020/10/16**

Test Result .....: **Pass**

Testing Engineer : Anna Hu

(Anna Hu)

Technical Manager : Hugo Chen

(Hugo Chen)

Authorized Signatory : Andy Zhang

(Andy Zhang)

Revision History

Revision	Issue Date	Revisions	Revised By
000	2020/10/16	Initial Issue	Andy Zhang

Contents

1 TEST STANDARDS 5

2 SUMMARY 6

2.1 Product Description 6
2.2 Host System Configuration List and Details 8
2.3 Short description of the Equipment under Test (EUT) 8
2.5 Normal Accessory setting 8
2.6 EUT configuration 8
2.7 Related Submittal(s) / Grant (s) 8
2.8 Modifications 8

3 TEST ENVIRONMENT 9

3.1 Test Facility 9
3.2 Environmental conditions 9
3.3 Test Description 9
3.4 Equipments Used during the Test 11
3.5 Measurement uncertainty 12

4 TEST CONDITIONS AND RESULTS 13

4.1 Output Power 13
4.1.1. Conducted Output Power 13
4.1.2. Radiated Output Power 14
4.2 Peak-to-Average Ratio (PAR) 16
4.3 Occupied Bandwidth and Emission Bandwidth 17
4.4 Band Edge compliance 18
4.5 Spurious Emssion on Antenna Port 19
4.6 Radiated Spurious Emssion 21
4.7 Frequency Stability under Temperature & Voltage Variations 26

5 Test Set up Photos of the EUT 28

6 External Photos of the EUT 28

7 Internal Photos of the EUT 28

1 TEST STANDARDS

The tests were performed according to following standards:
FCC Part 2: FREQUENCY ALLOCA-TIONS AND RADIO TREATY MAT-TERS; GENERAL RULES AND REG-ULATIONS
FCC Part 22 Subpart H: PRIVATE LAND MOBILE RADIO SERVICES.
FCC Part 24 Subpart E: PUBLIC MOBILE SERVICES
FCC Part 27: Miscellaneous Wireless Communications Services.
ANSI/TIA-603-E-2016: Land Mobile FM or PM Communications Equipment Measurement and Performance Standards.
ANSI C63.26-2015: IEEE/ANSI Standard for Compliance Testing of Transmitters Used in Licensed Radio Services
FCCKDB971168D01 Power Meas License Digital Systems

2 SUMMARY

2.1 Product Description

EUT	:	SMART PHONE
Model Number	:	S601
Model Declaration	:	N/A
Test Model	:	S601
Power Supply	:	DC 3.8V by battery
Hardware version	:	MT6761V/WE- V00
Software version	:	TEENI_I12_V01_20200903
Sample ID	:	TZ200901677–1#
Bluetooth		
Bluetooth Version	:	V5.0+EDR
Channel Number	:	79 Channels for Bluetooth BR/EDR(DSS) 40 Channels for BLE (DTS)
Modulation Technology	:	GFSK, π/4-DQPSK, 8-DPSK for Bluetooth BR/EDR (DSS) GFSK for BLE (DTS)
Data Rates	:	Bluetooth BR/EDR (DSS): 1/2/3Mbps BLE (DTS): 1/2Mbps
Antenna Type And Gain		Internal Antenna /0.85 dBi(Max.)
WiFi		
WLAN	:	Supported IEEE 802.11b/g/n
WLAN FCC Operation Frequency	:	IEEE 802.11b:2412-2462MHz IEEE 802.11g:2412-2462MHz IEEE 802.11n HT20:2412-2462MHz IEEE 802.11n HT40:2422-2452MHz
WLAN Channel Number	:	11 Channels for 2412-2462MHz(IEEE 802.11b/g/n HT20) 7 Channels for 2422-2452MHz(IEEE 802.11n HT40)
WLAN Modulation Technology	:	IEEE 802.11b: DSSS(CCK,DQPSK,DBPSK) IEEE 802.11g: OFDM (64QAM, 16QAM, QPSK, BPSK) IEEE 802.11n: OFDM (64QAM, 16QAM, QPSK, BPSK)
Antenna Type And Gain	:	Internal Antenna Wlan2.4G: 0.85 dBi(Max.)
GSM		
GSM FCC Operation Frequency	:	GSM850(UL: 824 – 849 MHz/DL: 869 – 894 MHz) GSM1900(UL: 1850 –1910 MHz/DL: 1930 – 1990 MHz)
Channel Separation	:	0.2MHz
Modulation Technology	:	GMSK,8PSK
Antenna Type And Gain	:	Internal Antenna GSM850: 0.31 dBi PCS1900: 0.62dBi
UTRA		
UTRA FCC Operation Frequency	:	WCDMA BAND II (UL: 1850 –1910 MHz/DL: 1930 – 1990 MHz) WCDMA BAND V (UL: 824 – 849 MHz/DL: 869 – 894 MHz)

Channel Separation	:	0.2MHz
Modulation Technology	:	OFDM (16QAM, QPSK)
Antenna Type And Gain	:	Internal Antenna WCDMA BAND II: 0.62dBi WCDMA BAND V: 0.31dBi
E-UTRA		
E-UTRA FCC Operation Frequency	:	☒FDD Band 2 (UL: 1850 – 1910 MHz/DL: 1930 – 1990 MHz) ☒FDD Band 4 (UL: 1710 – 1755 MHz/DL: 2110 – 2155 MHz) ☒FDD Band 7(UL: 2500-2570 MHz /DL: 2620-2690 MHz)
Channel Separation	:	0.1 MHz
Modulation Technology	:	OFDM (16QAM, QPSK)
Antenna Type And Gain	:	Internal Antenna FDD Band 2:0.62 dBi FDD Band 4:0.68 dBi FDD Band 7:0.73 dBi

Note: Antenna position refer to EUT Photos.

2.2 Host System Configuration List and Details

Manufacturer	Description	Model	Serial Number	Certificate

2.3 Short description of the Equipment under Test (EUT)

2.3.1 General Description

EUT is subscriber equipment in the LTE/WCDMA/GSM system. Support bands as list in section 2.1 of this report.

2.4 Normal Accessory setting

Fully charged battery was used during the test.

2.5 EUT configuration

The following peripheral devices and interface cables were connected during the measurement:

☐ supplied by the lab ☐ supplied by the manufacturer

Manufacturer	Description	Model	Serial Number	Certificate
N/A	N/A	N/A	N/A	N/A

2.6 Related Submittal(s) / Grant (s)

This submittal(s) (test report) is intended for **FCC ID: PQ4IPROS601** filing to comply with FCC Part 24 and FCC Part 27 Rules.

2.7 Modifications

No modifications were implemented to meet testing criteria.

3 TEST ENVIRONMENT

3.1 Test Facility

Designation Number: CN1275
Test Firm Registration Number: 167722

The 3m-Semi anechoic test site fulfills CISPR 16-1-4 according to ANSI C63.10 and CISPR 16-1-4:2010

3.2 Environmental conditions

During the measurement the environmental conditions were within the listed ranges:

Temperature:	15-35 ° C
Humidity:	30-60 %
Atmospheric pressure:	950-1050mbar

3.3 Test Description

FDD Band 2

Test Item	FCC Rule No.	Requirements	Judgement
Effective (Isotropic) Radiated Power	2.1046, 24.232(c)	EIRP ≤ 2W(33dBm)	Pass
Bandwidth	2.1049 24.238(a)	OBW: No limit. EBW: No limit.	Pass
Band Edges	2.1051, 24.238(a)	-13dBm	Pass
Spurious Emission at Antenna Terminals	2.1051, 24.238(a)	-13dBm	Pass
Field Strength of Spurious Radiation	2.1053, 24.238(a)	-13dBm	Pass
Frequency Stability	2.1055, 24.235	the fundamental emission stays within the authorized frequency block.	Pass
Peak to average ratio	24.232(d)	<13dB	Pass

FDD Band 4

Test Item	FCC Rule No.	Requirements	Judgement
Effective (Isotropic) Radiated Power	2.1046, 27.50(d)	ERP ≤ 1W(30dBm)	Pass
Occupied Bandwidth	2.1049	OBW: No limit.	Pass
Emission Bandwidth	2.1049	EBW: No limit.	Pass
Band Edges Compliance	2.1051, 27.53(h)	⩽ -13 dBm/1%*EBW, in 1 MHz bands immediately outside and adjacent to the frequency block.	Pass
Spurious Emission at Antenna Terminals	2.1051, 27.53(h)	-13dBm	Pass
Field Strength of Spurious Radiation	2.1053, 27.53(h)	-13dBm	Pass
Frequency Stability	2.1055, 27.54	the fundamental emissions stay within the authorized bands of operation. (2.5ppm)	Pass
Peak to average ratio	2.1046, 27.50(d)	<13dB	Pass

FDD Band 7

Test Item	FCC Rule No.	Requirements	Judgement
Effective (Isotropic) Radiated Power	2.1046, 27.50(h)(2)	EIRP ≤ 2W(33dBm)	Pass
Occupied Bandwidth	2.1049	OBW: No limit.	Pass
Emission Bandwidth	2.1049	EBW: No limit.	Pass
Band Edges(Out of Band Emission) Compliance	2.1051, 27.53(m)	KDB 971 168 D02 971168 D02 Misc OOBE License Digital Systems v01 &27.53(m) for detail the limit is upon different OBW	Pass
Spurious Emission at Antenna Terminals	2.1051, 27.53(g)	-13dBm	Pass
Field Strength of Spurious Radiation	2.1053, 27.53(g)	-13dBm	Pass
Frequency Stability	2.1055, 27.54	the fundamental emissions stay within the authorized bands of operation. (2.5ppm)	Pass
Peak to average ratio	2.1046, 27.50(d)	<13dB	Pass

3.4 Equipments Used during the Test

Item	Test Equipment	Manufacturer	Model No.	Serial No.	Calibration Date	Calibration Due Date
1	MXA Signal Analyzer	Keysight	N9020A	MY52091623	2020/1/2	2021/1/1
2	Power Sensor	Agilent	U2021XA	MY5365004	2020/1/2	2021/1/1
3	Power Meter	Agilent	U2531A	TW53323507	2020/1/2	2021/1/1
4	Wideband Antenna	schwarzbeck	VULB 9163	958	2019/11/16	2022/11/15
5	Horn Antenna	schwarzbeck	9120D-1141	1574	2019/11/16	2022/11/15
6	EMI Test Receiver	R&S	ESCI	100849/003	2020/1/2	2021/1/1
7	Controller	MF	MF7802	N/A	N/A	N/A
8	Amplifier	schwarzbeck	BBV 9743	209	2020/1/2	2021/1/1
9	Amplifier	Tonscend	TSAMP-0518SE	--	2020/1/2	2021/1/1
10	RF Cable(below 1GHz)	HUBER+SUHNER	RG214	N/A	2020/1/2	2021/1/1
11	RF Cable(above 1GHz)	HUBER+SUHNER	RG214	N/A	2020/1/2	2021/1/1
12	Artificial Mains	ROHDE & SCHWARZ	ENV 216	101333-IP	2020/1/2	2021/1/1
12	EMI Test Software	ROHDE & SCHWARZ	ESK1	V1.71	N/A	N/A
14	RE test software	Tonscend	JS32-RE	V2.0.2.0	N/A	N/A
15	Test Software	Tonscend	JS1120-2	V2.5.77.0418	N/A	N/A
16	UNIVERSAL RADIO COMMUNICATION	R&S	CMW500	101855	2020/1/2	2021/1/1
17	Horn Antenna	A-INFO	LB-180400-KF	J211020657	2019/11/16	2022/11/15
18	Amplifier	SKET	LNPA_1840-50	SK2018101801	2019/10/22	2020/10/21

3.5 Measurement uncertainty

The data and results referenced in this document are true and accurate. The reader is cautioned that there may be errors within the calibration limits of the equipment and facilities. The measurement uncertainty was calculated for all measurements listed in this test report acc. to ETSI TR 100 028 " Electromagnetic compatibility and Radio spectrum Matters (ERM); Uncertainties in the measurement of mobile radio equipment characteristics" and is documented in the Shenzhen Tongzhou Testing Co.,Ltd quality system acc. to DIN EN ISO/IEC 17025. Furthermore, component and process variability of devices similar to that tested may result in additional deviation. The manufacturer has the sole responsibility of continued compliance of the device.

Hereafter the best measurement capability for Shenzhen Tongzhou Testing Co.,Ltd is reported:

Test	Range	Measurement Uncertainty	Notes
Radiated Emission	30~1000MHz	3.10 dB	(1)
Radiated Emission	1~18GHz	3.70 dB	(1)
Radiated Emission	18-40GHz	3.90 dB	(1)
Conducted Disturbance	0.15~30MHz	1.63 dB	(1)
Conducted Power	9KHz~18GHz	0.61 dB	(1)
Spurious RF Conducted Emission	9KHz~40GHz	1.22 dB	(1)
Band Edge Compliance of RF Emission	9KHz~40GHz	1.22 dB	(1)
Occuiped Bandwidth	9KHz~40GHz	-	(1)

(1) This uncertainty represents an expanded uncertainty expressed at approximately the 95% confidence level using a coverage factor of k=1.96.

4 TEST CONDITIONS AND RESULTS

4.1 Output Power

TEST APPLICABLE

During the process of testing, the EUT was controlled via R&S Digital Radio Communication tester (CMW500) to ensure max power transmission and proper modulation. This result contains output power and EIRP measurements for the EUT. In all cases, output power is within the specified limits.

4.1.1. Conducted Output Power

TEST CONFIGURATION

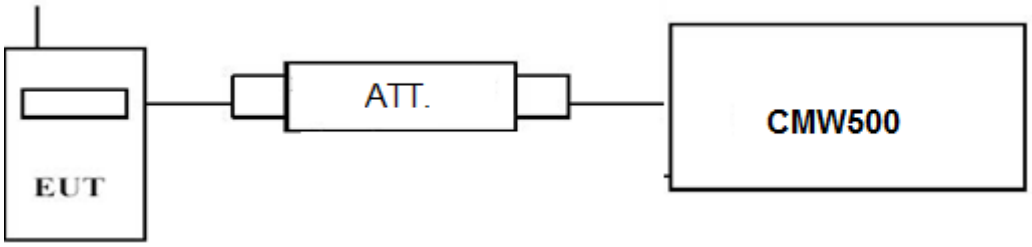

TEST PROCEDURE

Conducted Power Measurement:

a) Place the EUT on a bench and set it in transmitting mode.
b) Connect a low loss RF cable from the antenna port to a CMW500 by an Att.
c) EUT Communicate with CMW500 then selects a channel for testing.
d) Add a correction factor to the display CMW500, and then test.

TEST RESULTS

Pass

Remark:

1. *We were tested all RB Configuration refer 3GPP TS136 521 for each Channel Bandwidth of LTE Band 2/4/7;*
2. *please refer to Peak and Average Power in Appendix Test data for LTE.*

4.1.2. Radiated Output Power

LIMIT

This is the test for the maximum radiated power from the EUT.

Per Part 24.232(c) Mobile and portable stations are limited to 2 watts EIRP and the equipment must employ a means for limiting power to the minimum necessary for successful communications.
Per Part 27.50(d) (4) specifies, Fixed, mobile, and portable (hand-held) stations operating in the 1710-1755MHz band are limited to 1W EIRP. Fixed stations operating in this band are limited to a maximum antenna height of 10 meters above ground. Mobile and portable stations operating in this band must employ a means for limiting power to the minimum necessary for successful communications.
Per Part 27.50 (c) (10) the following power and antenna height requirements apply to stations transmitting in the 698–746 MHz band, the portable stations (hand-held devices) are limited to 3 watts ERP.
Per Part 27.50(b) (9) specifies, Control stations and mobile stations transmitting in the 746-757 MHz, 776-788 MHz, and 805-806 MHz bands and fixed stations transmitting in the 787-788 MHz and 805-806 MHz bands are limited to 30 watts ERP.
Per Part 27.50(a) (3) specifies, *Mobile and portable stations.* (i) For mobile and portable stations transmitting in the 2305-2315 MHz band or the 2350-2360 MHz band, the average EIRP must not exceed 50 milliwatts within any 1 megahertz of authorized bandwidth, *except that* for mobile and portable stations compliant with 3GPP LTE standards or another advanced mobile broadband protocol that avoids concentrating energy at the edge of the operating band the average EIRP must not exceed 250 milliwatts within any 5 megahertz of authorized bandwidth but may exceed 50 milliwatts within any 1 megahertz of authorized bandwidth. For mobile and portable stations using time division duplexing (TDD) technology, the duty cycle must not exceed 38 percent in the 2305-2315 MHz and 2350-2360 MHz bands. Mobile and portable stations using FDD technology are restricted to transmitting in the 2305-2315 MHz band. Power averaging shall not include intervals in which the transmitter is off.

Per Part 27.50(h) (2) specifies, The following power limits shall apply in the BRS and EBS: *Mobile and other user stations.* Mobile stations are limited to 2.0 watts EIRP. All user stations are limited to 2.0 watts transmitter output power.

TEST CONFIGURATION

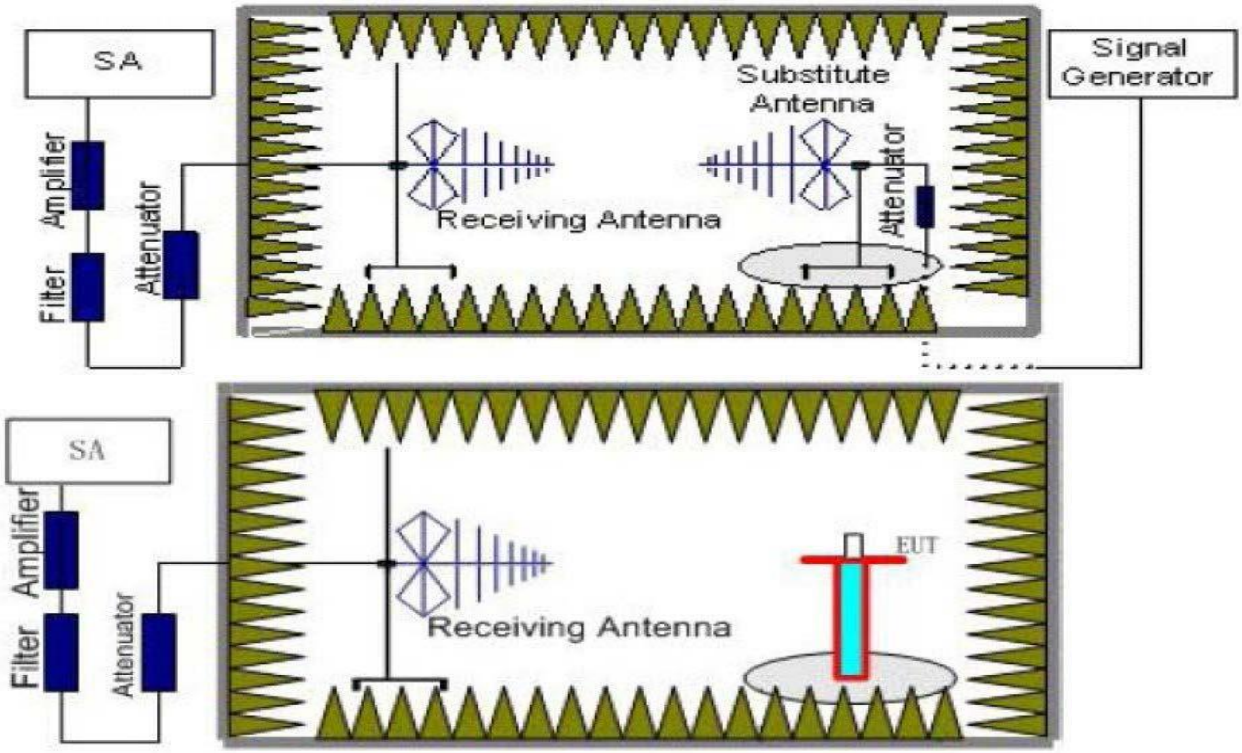

TEST PROCEDURE

1. EUT was placed on a 1.50 meter high non-conductive stand at a 3 meter test distance from the receive antenna. A receiving antenna was placed on the antenna mast 3 meters from the EUT for emission measurements. The height of receiving antenna is 1.50m. Detected emissions were maximized at each frequency by rotating the EUT through 360° and adjusting the receiving antenna polarization. The radiated emission measurements of all transmit frequencies in three channels (High, Middle, Low) were measured with peak detector.
2. A log-periodic antenna or double-ridged waveguide horn antenna shall be substituted in place of the EUT. The log-periodic antenna will be driven by a signal generator and the level will be adjusted till the same power value on the spectrum analyzer or receiver. The level of the spurious emissions can be calculated through the level of the signal generator, cable loss, the gain of the substitution antenna and the reading of the spectrum analyzer or receiver.
3. The EUT is then put into continuously transmitting mode at its maximum power level during the test.Set Test Receiver or Spectrum RBW=1MHz,VBW=3MHz, And the maximum value of the receiver should be recorded as (P_r).
4. The EUT shall be replaced by a substitution antenna. In the chamber, an substitution antenna for the frequency band of interest is placed at the reference point of the chamber. An RF Signal source for the frequency band of interest is connected to the substitution antenna with a cable that has been constructed to not interfere with the radiation pattern of the antenna. A power (P_{Mea}) is applied to the input of the substitution antenna, and adjust the level of the signal generator output until the value of the receiver reach the previously recorded (P_r). The power of signal source (P_{Mea}) is recorded. The test should be performed by rotating the test item and adjusting the receiving antenna polarization.
5. A amplifier should be connected to the Signal Source output port. And the cable should be connect between the Amplifier and the Substitution Antenna. The cable loss (P_{cl}) ,the Substitution Antenna Gain (G_a) and the Amplifier Gain (P_{Ag}) should be recorded after test.
   The measurement results are obtained as described below:
   Power(EIRP)=P_{Mea}+ P_{Ag} - P_{cl} + G_a
6. This value is EIRP since the measurement is calibrated using an antenna of known gain (2.15 dBi) and known input power.
7. ERP can be calculated from EIRP by subtracting the gain of the dipole, ERP = EIRP-2.15dBi.

TEST RESULTS

Radiated Measurement:

Remark:

1. *We were tested all RB Configuration refer 3GPP TS136 521 for each Channel Bandwidth of LTE Band 2/4/7; recorded worst case for each Channel Bandwidth of LTE Band 2/4/7;.*
2. *EIRP=P_{Mea}(dBm)-P_{cl}(dB)+P_{Ag}(dB)+G_a(dBi)*
3. *ERP = EIRP – 2.15dBi as EIRP by subtracting the gain of the dipole.*
4. *Margin = Limit - Emission Level*
5. *please refer to EIRP/ERP in Appendix Test data for LTE.*

4.2 Peak-to-Average Ratio (PAR)

LIMIT

The Peak-to-Average Ratio (PAR) of the transmission may not exceed 13 dB.

TEST CONFIGURATION

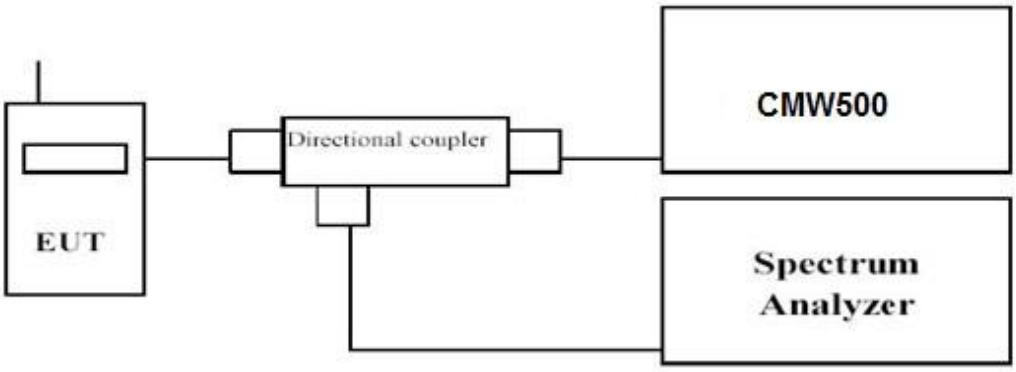

TEST PROCEDURE

1. Refer to instrument's analyzer instruction manual for details on how to use the power statistics/CCDF function;
2. Set resolution/measurement bandwidth ≥ signal's occupied bandwidth;
3. Set the number of counts to a value that stabilizes the measured CCDF curve;
4. Set the measurement interval as follows:
   1). for continuous transmissions, set to 1 ms,
   2). for burst transmissions, employ an external trigger that is synchronized with the EUT burst timing sequence, or use the internal burst trigger with a trigger level that allows the burst to stabilize and set the measurement interval to a time that is less than or equal to the burst duration.
5. Record the maximum PAPR level associated with a probability of 0.1%.

TEST RESULTS

Remark:

1. *We were tested all RB Configuration refer 3GPP TS136 521 for each Channel Bandwidth of LTE Band 2/4/7;*
2. *please refer to Peak and Average Power in Appendix Test data for LTE.*

4.3 Occupied Bandwidth and Emission Bandwidth

LIMIT

N/A

TEST CONFIGURATION

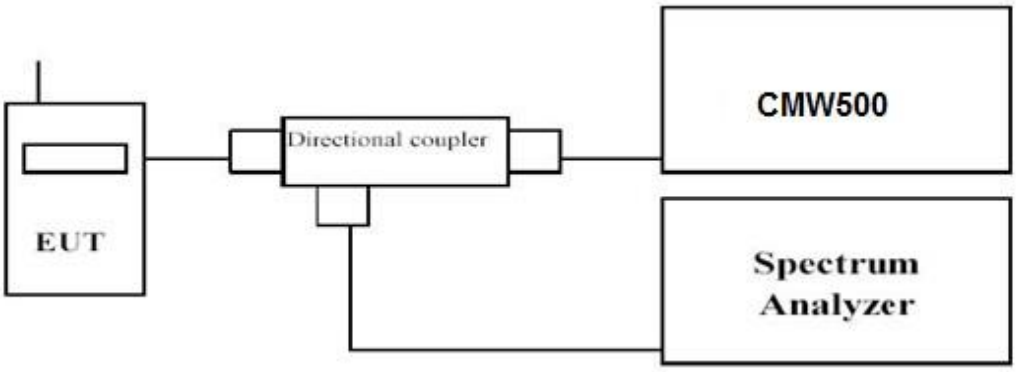

TEST PROCEDURE

The transmitter output was connected to a calibrated coaxial cable and coupler, the other end of which was connected to a spectrum analyzer. The occupied bandwidth was measured with the spectrum analyzer at low, middle and high channel in each band. The -26dBc Emission bandwidth was also measured and recorded.
Set RBW was set to about 1% of emission BW, VBW≥3 times RBW.
-26dBc display line was placed on the screen (or 99% bandwidth), the occupied bandwidth is the delta frequency between the two points where the display line intersects the signal trace.

TEST RESULTS

Remark:

1. *We were tested all RB Configuration refer 3GPP TS136 521 for each Channel Bandwidth of LTE Band 2/4/7;*
2. *please refer to Emission bandwidth and OBW in Appendix Test data for LTE.*

4.4 Band Edge compliance

LIMIT

For LTE Band 2: Per §24.238(a): Out of band emissions. The power of any emission outside of the authorized operating frequency ranges must be attenuated below the transmitting power (P) by a factor of at least 43 + 10 log(P) dB.

For LTE Band 4: Per §27.53(h): For operations in the 814–849 MHz band, the power of any emission outside of the authorized operating frequency ranges must be attenuated below the transmitting power (P) by a factor of at least 43 + 10 log(P) dB.

For LTE Band 7: §27.53(m) *(4) For mobile digital stations, the attenuation factor shall be not less than 40 + 10 log (P) dB on all frequencies between the channel edge and 5 megahertz from the channel edge, 43 + 10 log (P) dB on all frequencies between 5 megahertz and X megahertz from the channel edge, and 55 + 10 log (P) dB on all frequencies more than X megahertz from the channel edge, where X is the greater of 6 megahertz or the actual emission bandwidth as defined in paragraph (m)(6) of this section. In addition, the attenuation factor shall not be less that 43 + 10 log (P) dB on all frequencies between 2490.5 MHz and 2496 MHz and 55 + 10 log (P) dB at or below 2490.5 MHz. Mobile Satellite Service licensees operating on frequencies below 2495 MHz may also submit a documented interference complaint against BRS licensees operating on channel BRS Channel 1 on the same terms and conditions as adjacent channel BRS or EBS licensees.*

TEST CONFIGURATION

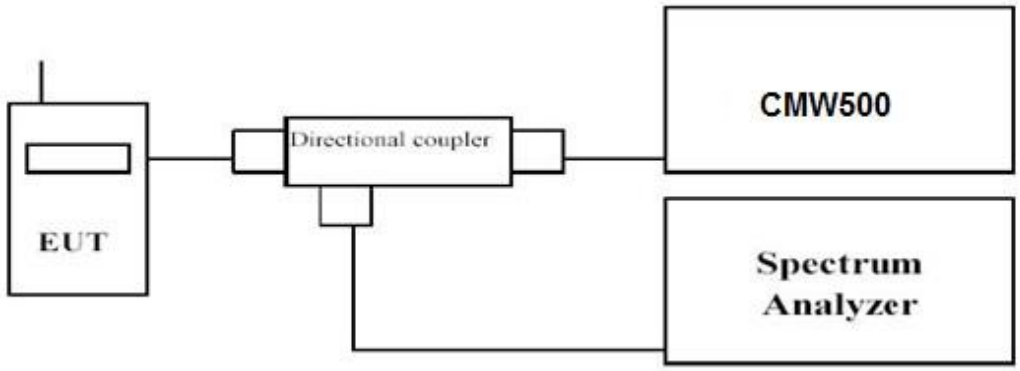

TEST PROCEDURE

1. The transmitter output port was connected to base station.
2. The RF output of EUT was connected to the power meter by RF cable and attenuator, the path loss was compensated to the results for each measurement.
3. Set EUT at maximum power through base station.
4. Select lowest and highest channels for each band and different modulation.
5. Measure Band edge using RMS (Average) detector by spectrum

TEST RESULTS

Remark:

1. *We were tested all RB Configuration refer 3GPP TS136 521 for each Channel Bandwidth of LTE Band 2/4/7;*
2. *please refer to Band Edge and Emission Mask in Appendix Test data for LTE.*

4.5 Spurious Emssion on Antenna Port

LIMIT

For LTE Band 2: Per §24.238(a): Out of band emissions. The power of any emission outside of the authorized operating frequency ranges must be attenuated below the transmitting power (P) by a factor of at least 43 + 10 log(P) dB.

For LTE Band 4: Per §27.53(h) (a): For operations in the 814–849 MHz band, the power of any emission outside of the authorized operating frequency ranges must be attenuated below the transmitting power (P) by a factor of at least 43 + 10 log(P) dB.

For LTE Band 7: §27.53(m) *(4) For mobile digital stations, the attenuation factor shall be not less than 40 + 10 log (P) dB on all frequencies between the channel edge and 5 megahertz from the channel edge, 43 + 10 log (P) dB on all frequencies between 5 megahertz and X megahertz from the channel edge, and 55 + 10 log (P) dB on all frequencies more than X megahertz from the channel edge, where X is the greater of 6 megahertz or the actual emission bandwidth as defined in paragraph (m)(6) of this section. In addition, the attenuation factor shall not be less that 43 + 10 log (P) dB on all frequencies between 2490.5 MHz and 2496 MHz and 55 + 10 log (P) dB at or below 2490.5 MHz. Mobile Satellite Service licensees operating on frequencies below 2495 MHz may also submit a documented interference complaint against BRS licensees operating on channel BRS Channel 1 on the same terms and conditions as adjacent channel BRS or EBS licensees.*

TEST CONFIGURATION

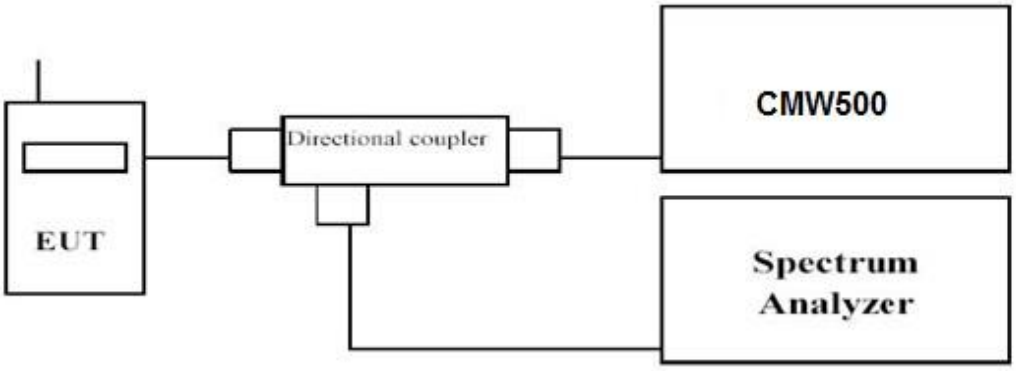

TEST PROCEDURE

The EUT was setup according to ANSI C63.26

a. Place the EUT on a bench and set it in transmitting mode.
b. Connect a low loss RF cable from the antenna port to a spectrum analyzer and CMW500 by a Directional Couple.
c. EUT Communicate with CMW500, then select a channel for testing.
d. Add a correction factor to the display of spectrum, and then test.
e. The resolution bandwidth of the spectrum analyzer was set sufficient scans were taken to show the out of band Emission if any up to10th harmonic.
f. Please refer to following tables for test antenna conducted emissions.

Working Frequency	Sub range (GHz)	RBW	VBW	Sweep time (s)
LTE Band 2/4/7	0.000009~0.000015	1KHz	3KHz	Auto
	0.000015~0.03	10KHz	30KHz	Auto
	0.03~26	1 MHz	3 MHz	Auto

TEST RESULTS

Remark:

1. *We were tested all RB Configuration refer 3GPP TS136 521 for each Channel Bandwidth of LTE Band 2/4/7;*
2. *please refer to Conducted Spurious Emission in Appendix Test data for LTE.*

4.6 Radiated Spurious Emssion

LIMIT

For LTE Band 2: Per §24.238(a): Out of band emissions. The power of any emission outside of the authorized operating frequency ranges must be attenuated below the transmitting power (P) by a factor of at least 43 + 10 log(P) dB.

For LTE Band 4: Per §27.53(h): For operations in the 814–849 MHz band, the power of any emission outside of the authorized operating frequency ranges must be attenuated below the transmitting power (P) by a factor of at least 43 + 10 log(P) dB.

For LTE Band 2/17: Per §27.53(g): For operations in the 600 MHz band and the 698-746 MHz band, the power of any emission outside a licensee's frequency band(s) of operation shall be attenuated below the transmitter power (P) within the licensed band(s) of operation, measured in watts, by at least 43 + 10 log (P) dB. Compliance with this provision is based on the use of measurement instrumentation employing a resolution bandwidth of 100 kilohertz or greater. However, in the 100 kilohertz bands immediately outside and adjacent to a licensee's frequency block, a resolution bandwidth of at least 30 kHz may be employed.

TEST CONFIGURATION

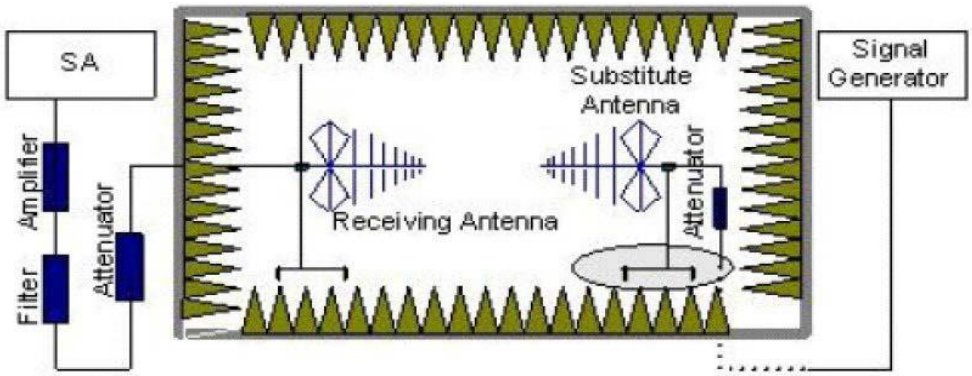

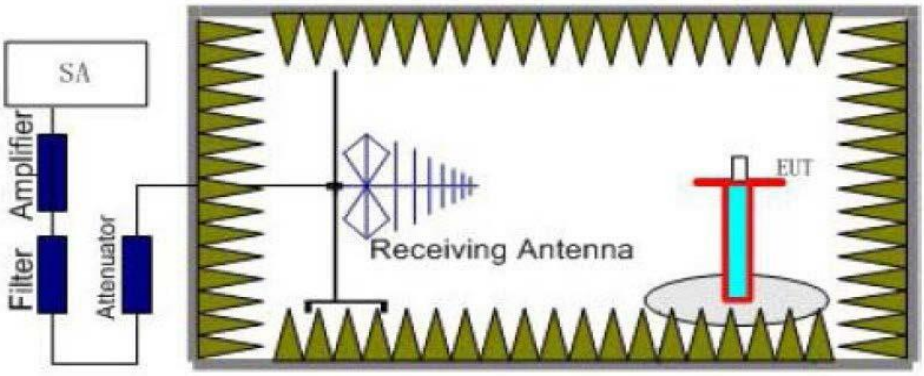

TEST PROCEDURE

1. EUT was placed on a 1.50 meter high non-conductive stand at a 3 meter test distance from the receive antenna. A receiving antenna was placed on the antenna mast 3 meters from the EUT for emission measurements. The height of receiving antenna is 1.50m. Detected emissions were maximized at each frequency by rotating the EUT through 360° and adjusting the receiving antenna polarization. The radiated emission measurements of all transmit frequencies in three channels (High, Middle, Low) were measured with peak detector.
2. A log-periodic antenna or double-ridged waveguide horn antenna shall be substituted in place of the EUT. The log-periodic antenna will be driven by a signal generator and the level will be adjusted till the same power value on the spectrum analyzer or receiver. The level of the spurious emissions can be calculated through the level of the signal generator, cable loss, the gain of the substitution antenna and the reading of the spectrum analyzer or receiver.
3. The EUT is then put into continuously transmitting mode at its maximum power level during the test.Set

Test Receiver or Spectrum RBW=1MHz,VBW=3MHz, And the maximum value of the receiver should be recorded as (P_r).

4. The EUT shall be replaced by a substitution antenna. In the chamber, an substitution antenna for the frequency band of interest is placed at the reference point of the chamber. An RF Signal source for the frequency band of interest is connected to the substitution antenna with a cable that has been constructed to not interfere with the radiation pattern of the antenna. A power (P_{Mea}) is applied to the input of the substitution antenna, and adjust the level of the signal generator output until the value of the receiver reach the previously recorded (P_r). The power of signal source (P_{Mea}) is recorded. The test should be performed by rotating the test item and adjusting the receiving antenna polarization.
5. A amplifier should be connected to the Signal Source output port. And the cable should be connect between the Amplifier and the Substitution Antenna. The cable loss (P_{cl}) ,the Substitution Antenna Gain (G_a) and the Amplifier Gain (P_{Ag}) should be recorded after test.
   The measurement results are obtained as described below:
   Power(EIRP)=P_{Mea}+ P_{Ag} - P_{cl} + G_a
6. This value is EIRP since the measurement is calibrated using an antenna of known gain (2.15 dBi) and known input power.
7. ERP can be calculated from EIRP by subtracting the gain of the dipole, ERP = EIRP -2.15dBi.
8. In order to make sure test results more clearly,we set frequency range and sweep time for difference frequency range as follows table:

Working Frequency	Subrange (GHz)	RBW	VBW	Sweep time (s)
LTE Band 2/4/7	0.00009~0.15	1KHz	3KHz	30
	0.00015~0.03	10KHz	30KHz	10
	0.03~1	100KHz	300KHz	10
	1~2	1 MHz	3 MHz	2
	2~5	1 MHz	3 MHz	3
	5~8	1 MHz	3 MHz	3
	8~10th	1 MHz	3 MHz	3

TEST LIMITS

According to rules specify that the power of any emission outside of the authorized operating frequency ranges must be attenuated below the transmitting power (P) by a factor of at least 43 + 10 log(P) dB.
The specification that emissions shall be attenuated below the transmitter power (P) by at least 43 + 10 log (P) dB, translates in the relevant power range (1 to 0.001 W) to -13 dBm. At 1 W the specified minimum attenuation becomes 43 dB and relative to a 30 dBm (1 W) carrier becomes a limit of -13 dBm. At 0.001 W (0 dBm) the minimum attenuation is 13 dB, which again yields a limit of -13 dBm. In this way a translation of the specification from relative to absolute terms is carried out.

Frequency	Channel	Frequency Range	Verdict
LTE Band 2/4/7	Low	9 KHz – 10th GHz	PASS
	Middle	9 KHz – 10th GHz	PASS
	High	9 KHz – 10th GHz	PASS

TEST RESULTS

Remark:
1. We tested all RB Configuration refer 3GPP TS136 521 for each Channel Bandwidth of LTE Band 2/4/7;
2. Peak EIRP=P_{Mea}(dBm)-P_{cl}(dB) +G_a(dBi)
3. We were not recorded other points as values lower than limits.
4. Margin = Limit - Peak EIRP

LTE TDD Band 2_Channel Bandwidth 1.4MHz_QPSK_ Low Channel

Frequency (MHz)	P_{Mea} (dBm)	P_{cl} (dB)	Diatance	G_a Antenna Gain(dB)	Peak EIRP (dBm)	Limit (dBm)	Margin (dB)	Polarization
3701.4	-52.03	1.27	3	12.11	-41.19	-13	28.19	H
3701.4	-57.51	1.27	3	12.11	-46.67	-13	33.67	H
5552.1	-47.14	1.7	3	12.58	-36.26	-13	23.26	V
5552.1	-54.37	1.7	3	12.58	-43.49	-13	30.49	V

LTE TDD Band 2_Channel Bandwidth 1.4MHz_QPSK_ Middle Channel

Frequency (MHz)	P_{Mea} (dBm)	P_{cl} (dB)	Diatance	G_a Antenna Gain(dB)	Peak EIRP (dBm)	Limit (dBm)	Margin (dB)	Polarization
3760	-51.99	1.28	3	12.16	-41.11	-13	28.11	H
3760	-55.07	1.28	3	12.16	-44.19	-13	31.19	H
5640	-53.80	1.72	3	12.62	-42.90	-13	29.90	V
5640	-60.12	1.72	3	12.62	-49.22	-13	36.22	V

LTE TDD Band 2_Channel Bandwidth 1.4MHz_QPSK_ High Channel

Frequency (MHz)	P_{Mea} (dBm)	P_{cl} (dB)	Diatance	G_a Antenna Gain(dB)	Peak EIRP (dBm)	Limit (dBm)	Margin (dB)	Polarization
3818.6	-48.70	1.24	3	12.01	-37.93	-13	24.93	H
3818.6	-52.78	1.24	3	12.01	-42.01	-13	29.01	H
5727.9	-52.74	1.66	3	12.51	-41.89	-13	28.89	V
5727.9	-58.88	1.66	3	12.51	-48.03	-13	35.03	V

LTE TDD Band 4_Channel Bandwidth 1.4MHz_QPSK_ Low Channel

Frequency (MHz)	P_{Mea} (dBm)	P_{cl} (dB)	Diatance	G_a Antenna Gain(dB)	Peak EIRP (dBm)	Limit (dBm)	Margin (dB)	Polarization
3421.4	-50.84	1.2	3	11.82	-40.22	-13	27.22	H
3421.4	-52.70	1.2	3	11.82	-42.08	-13	29.08	H
5132.1	-47.91	1.6	3	12.37	-37.14	-13	24.14	V
5132.1	-58.22	1.6	3	12.37	-47.45	-13	34.45	V

LTE TDD Band 4_Channel Bandwidth 1.4MHz_QPSK_ Middle Channel

Frequency (MHz)	P_{Mea} (dBm)	P_{cl} (dB)	Diatance	G_a Antenna Gain(dB)	Peak EIRP (dBm)	Limit (dBm)	Margin (dB)	Polarization
3465	-51.14	1.21	3	11.86	-40.49	-13	27.49	H
3465	-56.04	1.21	3	11.86	-45.39	-13	32.39	H
5197.5	-51.11	1.61	3	12.4	-40.32	-13	27.32	V
5197.5	-60.74	1.61	3	12.4	-49.95	-13	36.95	V

LTE TDD Band 4_Channel Bandwidth 1.4MHz_QPSK High Channel

Frequency (MHz)	P_{Mea} (dBm)	P_{cl} (dB)	Diatance	G_a Antenna Gain(dB)	Peak EIRP (dBm)	Limit (dBm)	Margin (dB)	Polarization
3508.6	-49.39	1.22	3	11.91	-38.70	-13	25.70	H
3508.6	-55.37	1.22	3	11.91	-44.68	-13	31.68	H
5262.9	-51.39	1.63	3	12.43	-40.59	-13	27.59	V
5262.9	-60.63	1.63	3	12.43	-49.83	-13	36.83	V

LTE TDD Band 7_Channel Bandwidth 5MHz_QPSK_ Low Channel

Frequency (MHz)	P_{Mea} (dBm)	P_{cl} (dB)	Diatance	G_a Antenna Gain(dB)	Peak EIRP (dBm)	Limit (dBm)	Margin (dB)	Polarization
5005	-52.23	1.57	3	12.3	-41.5	-25	16.5	H
5005	-54.07	1.57	3	12.3	-43.34	-25	18.34	H
7507.5	-45.35	2	3	11.25	-36.1	-25	11.1	V
7507.5	-55.35	2	3	11.25	-46.1	-25	21.1	V

LTE TDD Band 7_Channel Bandwidth 5MHz_QPSK_ Middle Channel

Frequency (MHz)	P_{Mea} (dBm)	P_{cl} (dB)	Diatance	G_a Antenna Gain(dB)	Peak EIRP (dBm)	Limit (dBm)	Margin (dB)	Polarization
5070	-48.44	1.58	3	12.34	-37.68	-25	12.68	H
5070	-57.79	1.58	3	12.34	-47.03	-25	22.03	H
7605	-51.28	2.01	3	11.22	-42.07	-25	17.07	V
7605	-57.3	2.01	3	11.22	-48.09	-25	23.09	V

LTE TDD Band 7_Channel Bandwidth 5MHz_QPSK_ High Channel

Frequency (MHz)	P_{Mea} (dBm)	P_{cl} (dB)	Diatance	G_a Antenna Gain(dB)	Peak EIRP (dBm)	Limit (dBm)	Margin (dB)	Polarization
5135	-51.36	1.6	3	12.37	-40.59	-25	15.59	H
5135	-54.29	1.6	3	12.37	-43.52	-25	18.52	H
7702.5	-45.36	2.03	3	11.19	-36.2	-25	11.2	V
7702.5	-54.93	2.03	3	11.19	-45.77	-25	20.77	V

4.7 Frequency Stability under Temperature & Voltage Variations

LIMIT

According to FCC §2.1055, §24.235§27.54 and §90.213 requirement, the frequency stability shall be sufficient to ensure that the fundamental emissions stay within the authorized bands of operation and should not exceed 2.5ppm.

TEST CONFIGURATION

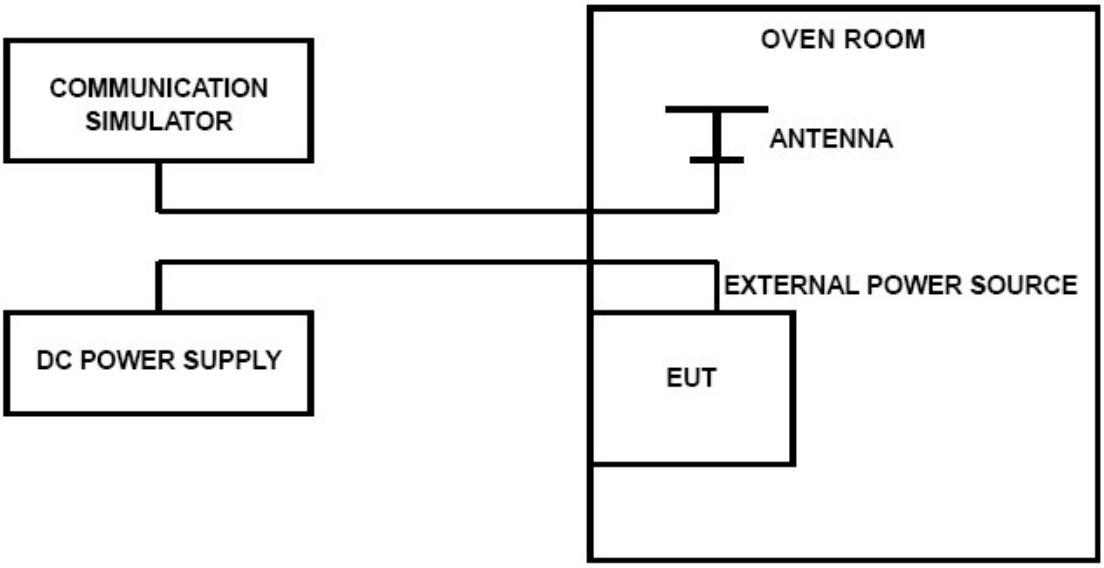

TEST PROCEDURE

The EUT was setup according to ANSI C63.26.

Frequency Stability Under Temperature Variations:
In order to measure the carrier frequency under the condition of AFC lock, it is necessary to make measurements with the EUT in a “call mode”. This is accomplished with the use of R&S CMW500 DIGITAL RADIO COMMUNICATION TESTER.
1. Measure the carrier frequency at room temperature.
2. Subject the EUT to overnight soak at -30℃.
3. With the EUT, powered via nominal voltage, connected to the CMW500 and in a simulated call on middle channel for Specific band, measure the carrier frequency. These measurements should be made within 2 minutes of Powering up the EUT, to prevent significant self-warming.
4. Repeat the above measurements at 10℃ increments from -30℃ to +50℃. Allow at least 1.5 hours at each temperature, unpowered, before making measurements.
5. Re-measure carrier frequency at room temperature with nominal voltage. Vary supply voltage from minimum voltage to maximum voltage, in 0.1Volt increments re-measuring carrier frequency at each voltage. Pause at nominal voltage for 1.5 hours unpowered, to allow any self-heating to stabilize, before continuing.
6. Subject the EUT to overnight soak at +50℃.
7. With the EUT, powered via nominal voltage, connected to the CMW500 and in a simulated call on the centre channel, measure the carrier frequency. These measurements should be made within 2 minutes of Powering up the EUT, to prevent significant self-warming.
8. Repeat the above measurements at 10 ℃ increments from +50℃ to -30℃. Allow at least 1.5 hours at each temperature, unpowered, before making measurements
9. At all temperature levels hold the temperature to +/- 0.5℃ during the measurement procedure.

Frequency Stability Under Voltage Variations:
Set chamber temperature to 20℃. Use a variable AC power supply / DC power source to power the EUT and set the voltage to rated voltage. Set the spectrum analyzer RBW low enough to obtain the desired frequency resolution and recorded the frequency.
Reduce the input voltage to specify extreme voltage variation (±15%) and endpoint, record the maximum

frequency change.

TEST RESULTS

Remark:

1. *We were tested all RB Configuration refer 3GPP TS136 521 for each Channel Bandwidth of LTE Band 2/4/7;*
2. *please refer to Frequency Stability in Appendix Test data for LTE.*

5 Test Set up Photos of the EUT

Please refer to separated files for Test Setup Photos of the EUT.

6 External Photos of the EUT

Please refer to separated files for External Photos of the EUT.

7 Internal Photos of the EUT

Please refer to separated files for Internal Photos of the EUT.

**********End of Report **********