Lyngsoe Systems

# *RFID System S21*
# *User's Guide*

Lyngsoe Systems
5570 Kennedy Road, Unit B
Mississauga, Ontario L4Z 2A9

CANADA
Tel: +1 (905) 501-1533
Fax: +1 (905) 501-1538

Lyngsoe RFID System S21 User's Guide
Part Number: 950061
First Edition
August 2002

The information in this manual is for reference purposes only and is subject to change without notice. The contents of this manual and the associated Lyngsoe S21 Series hardware are the property of Lyngsoe Systems and are copyrighted©. All rights are reserved by Lyngsoe Systems. In no event is Lyngsoe Systems liable for incidental or consequential damages in connection with or arising from the use of this manual or any related documentation. This document may not, in whole or in part, be copied, photocopied, reproduced, translated, or reduced to an electronic medium or machine readable form without prior written consent from Lyngsoe Systems.

© 2002- 2007 Lyngsoe Systems. All Rights Reserved.

Lyngsoe is a registered trademark® of Lyngsoe Systems. All other product names and services listed are copyright and registered trademarks/trade names of their respective owners.

Use, duplication or disclosure by the Government is subject to restrictions as set forth in subdivision (b)(3)(ii) of the Rights in Technical Data and Computer Software clause at 252.227-7013. Lyngsoe Systems.

Printed in Canada.

**FCC CLASS A Digital Device or Peripheral - Information to the User**

**NOTE:** This equipment has been tested and found to comply with the limits for a Class A digital device, pursuant to Part 15 of the FCC Rules. These limits are designed to provide reasonable protection against harmful interference when the equipment is operated in a commercial environment. This equipment generates, uses, and can radiate radio energy and, if not installed and used in accordance with this guide, may cause harmful interference to radio communications. Operation of this equipment in a residential area is likely to cause harmful interference in which case, the user will be required to correct the interference at his own expense.

**WARNING:**
Changes or modifications not expressly approved by Lyngsoe Systems could void the user's authority to operate the equipment.

This page intentionally left blank.

# Table of Contents:


## : Table of Contents:

## : List of Figures

## : Preface S21

What This Manual Contains . . . . . i
Summary . . . . . i
Related Manuals . . . . . ii
Text Conventions . . . . . ii

## Chapter 1: Introduction

Transponder Identification System. . . . . 1
RFID Specific Terms . . . . . 2
Transponder. . . . . 2
Excitation Signal . . . . . 2
Response Signal . . . . . 2
Reading Points. . . . . 2
Communication Links . . . . . 2
RFID System . . . . . 2
Postal RFID System . . . . . 2
RFID System S21 Configuration Principles. . . . . 3
Communication Links . . . . . 3
System Parameters . . . . . 3
System Code . . . . . 3
Reader Address . . . . . 4
Real Time Clock . . . . . 4
Receiving UHF Data . . . . . 4
Reader Data Handling . . . . . 4
Reader Serial Port . . . . . 4
Reader Reset . . . . . 4
Exciter Address . . . . . 5
Compatibility with RFID System 95. . . . . 5

## Chapter 2: Reader RD21 Installation and Connections

Before You Begin. . . . . 1
Mechanical Assembling . . . . . 1
Connecting the RS232 Communication Line. . . . . 2
Connecting the RS485 Four-Wire Communication Line . . . . . 3
Connecting the Exciter Communication Line . . . . . 4
Connecting the Power Supply . . . . . 5
One Reader per power supply. . . . . 6
Multiple Readers per power supply. . . . . 7
Connecting External Devices . . . . . 8

## Chapter 3: Exciter EX21 Installation and Connections

Before You Begin. . . . . 1
Tools . . . . . 1
Mechanical Assembling . . . . . 2
Assembling the LF Antenna for EX21 . . . . . 2
LF Antenna Connections . . . . . 3
Connecting the RS485 Communication Lines . . . . . 3
Connecting the Power Supply . . . . . 4

One Exiter per power supply. . . . . 5
Multiple Exiters per power supply. . . . . 6
Assembling Other Models of Exciters. . . . . 7

## Chapter 4: Power Supply TRM95 Installation and Connection

Before you Begin. . . . . 1
Tools . . . . . 1
Installing Power Supply TRM95. . . . . 1
Placement . . . . . 1
Safety . . . . . 2
Wiring Connections and Supply . . . . . 2
Connecting Equipment to the Power Supply Unit. . . . . 3
Connecting the AC Mains Supply . . . . . 3

## Chapter 5: Configuration and Operation

Before You Begin . . . . . 1
General Procedure Rules . . . . . 1
Setting Up the Reader/PC Connection . . . . . 2
Reader’s Power-up Sequence . . . . . 4
Learning Procedure (Optional) . . . . . 4
Resetting the Reader . . . . . 5
Checking the Reader’s Basic Parameters . . . . . 5
Setting Up the Exciter’s Address. . . . . 7
LF Transmitter Output. . . . . 8
Configuring the Reader . . . . . 10
Setting Up the Carrier Threshold. . . . . 10
Setting Up the Exciter’s Test-Tag . . . . . 12
Setting Up the Real Time Clock . . . . . 13
Configuring Reader Motion Sensor Driven Mode of Operation. . . . . 14
Configuring Exciter Motion Sensor Driven Mode of Operation. . . . . 15
Configuring the Reader’s Application Parameters . . . . . 16
Configuring the Reader’s Network Parameters. . . . . 16
Storing the Reader’s Configuration. . . . . 17
Reader - Final Setup . . . . . 18
S21 RFID System - Final Test. . . . . 18
Programming and Testing the Transponder PT21. . . . . 1
TQ21 - Tag Qualifier General Description . . . . . 1
TQ21 Installation and Setup . . . . . 1
PC Software Configuration . . . . . 1
TQ21 Connections. . . . . 2
Configuration . . . . . 2
New parameters and commands . . . . . 3
Parameters and commands disabled . . . . . 3
Firmware . . . . . 3
Hardware configuration parameters . . . . . 4
Software configuration parameters . . . . . 4
Operation . . . . . 4
General conditions . . . . . 4
Testing Tags . . . . . 4
Programming Tags . . . . . 5

## Chapter 7: Troubleshooting

Preventive Maintenance. . . . . 1
General Guidelines . . . . . 1

## Chapter 8: Drawings

Overview . . . . . 1

## Appendix A: Specifications

Transponder PT21 . . . . . 1
Reader RD21 . . . . . 2
Exciter EX21 . . . . . 4
Power Supply TRM95 . . . . . 5
System Performance . . . . . 5

## Appendix B: Transponder PT21 Messages

Message Format . . . . . 1
PT21 Parameters . . . . . 1
Total Transmission Time . . . . . 1

## Appendix C: Excitation Modes

Excitation Modes and Parameter Settings . . . . . 1

## Appendix D: Reader Software Upgrade Procedure

Upgrading the Firmware. . . . . 1
Setting the Reader’s Address . . . . . 1
Saving Parameters. . . . . 2
Using the RS232 Interface . . . . . 2
Using the RS485 Interface . . . . . 3
Restoring Parameters. . . . . 4
Setting the Reader’s Network Configuration . . . . . 4
Final Instructions. . . . . 5

## Appendix E: Reader Hardware Calibration Procedure

Introducing Special Parameters. . . . . 1

## : Glossary

# List of Figures

2Figure 1-1:RFID Concept . . . . . 1-1

2Figure 2-1:Connections and Jumper Settings for the RS232 - PC Communication Line. . . . . 2-2

2Figure 2-2:Connections and Jumper Settings for the RS485 Four-Wire Communication Line . . . . . 2-3

2Figure 2-3:Connections and Jumper Settings for the Exciter Communication Line . . . . . 2-4

2Figure 2-4:One Reader per Power Supply Connection. . . . . 2-6

2Figure 2-5:Multiple Readers per Power Supply Connection. . . . . 2-7

2Figure 2-6:External Devices Connections. . . . . 2-8

2Figure 3-1:LF Antenna Connections. . . . . 3-3

2Figure 3-2:Connections and Jumpers Settings for the RS485 Communication Lines . . . . . 3-4

2Figure 3-3:One Exciter per Power Supply Connection. . . . . 3-5

2Figure 3-4:Multiple Exciters per Power Supply Connection. . . . . 3-6

2Figure 5-1:Connecting the Reader to a PC/Laptop using RS232 interface. . . . . 5-2

2Figure 5-2:Connecting the Reader to a PC/Laptop using RS485 interface. . . . . 5-3

2Figure 5-3:Setting Up the Exciter’s Address . . . . . 5-7

2Figure 5-4:LF Signal Measurement . . . . . 5-8

2Figure 5-5:  MS connection to the Reader MBD21. . . . . 5-14

2Figure 5-6:  MS connection to the Exciter LFA21.. . . . . 5-15

# Preface S21

## What This Manual Contains

This manual gives procedures for installing and configuring the Reader RD21,the Exciter EX21, and programming the Transponder PT21. It also gives you maintenance and troubleshooting procedures.

**Summary**

A summary of the contents of this manual is given below:

Chapter 1, *Introduction* describes the Transponder Identification System and the Postal RFID System. It also gives information on the RFID System S21 configuration principles.

Chapter 2, *Reader RD21 Installation and Connections* , explains how to install and connect the Reader, set the jumpers for the interfaces, and connect external devices to the Reader, if necessary.

Chapter 3, *Exciter EX21 Installation and Connections*, explains how to assemble the Exciter using the LF antenna kit and the Enclosure EX21 kit, make the LF antenna connection, connect the serial interfaces and power supply and set the jumpers for the interfaces.

Chapter 4, *Power Supply TRM95 Installation and Connection*, explains how to install the unit and make input and output connections to the unit.

Chapter 5, *Configuration and Operation*, provides procedures for setting up and configuring a RFID System S21.

Chapter 6, *Programming and Testing the Transponder PT21* provides a description of the equipment used, how to set up a site and gives procedures for programming the Transponder PT21.

Chapter 7, *Troubleshooting*, describes maintenance and troubleshooting procedures that you must follow when using the RFID System S21.

Chapter 8, *Drawings*, provides mechanical drawings for the RD21, EX21, and TRM95.

Appendix A, *Specifications*, gives electrical, environmental, and physical specifications for: Transponder PT21, Reader RD21,Exciter EX21, and for the complete RFID System S21.

Appendix B, *Transponder PT21 Messages*, describes the PT21 Message format.

Appendix C, *Excitation Modes*, describes the various excitation modes (signal descriptions)and their associated parameter setting.

Appendix D, *Reader Software Upgrade Procedure*, describes the procedures for upgrading Reader’s RD21 main software using the serial interface.

The Glossary is an alphabetical listing of terms and acronyms used in this manual.

## Related Manuals

| | |
|---|---|
| Technical Guide | *RFID System S21 Technical Guide*. This Guide describes the RFID System S21. It includes operation principles, block diagrams and electrical schematics for all equipment and assembly parts for the RFID System S21. |
| Reference Guide | *RFID System S21 Reference Guide*. This Guide describes all the commands that control the RFID operating system. |

## Text Conventions

Helvetica is used for commands you must type exactly as it appears.

*Italics* is used for document titles, file names and new terms being defined.

`Courier` is used for messages displayed on the screen.

# Chapter 1

# Introduction

This chapter describes Transponders and their functions, the purpose of the Postal RFID System and its uses. It also gives information on the RFID System S21 configuration principles.

## Transponder Identification System

The purpose of a data capture or identification system that uses a Transponder as an identification token is:

- To automatically identify animate or inanimate objects having attached a Transponder with an unique identifier
- To ensure that information is available in a format that can be readily accepted by a computer
- To minimize the possibility of errors in the identification process.

The concept of Radio Frequency Identification (RFID) is presented in Figure 1-1.

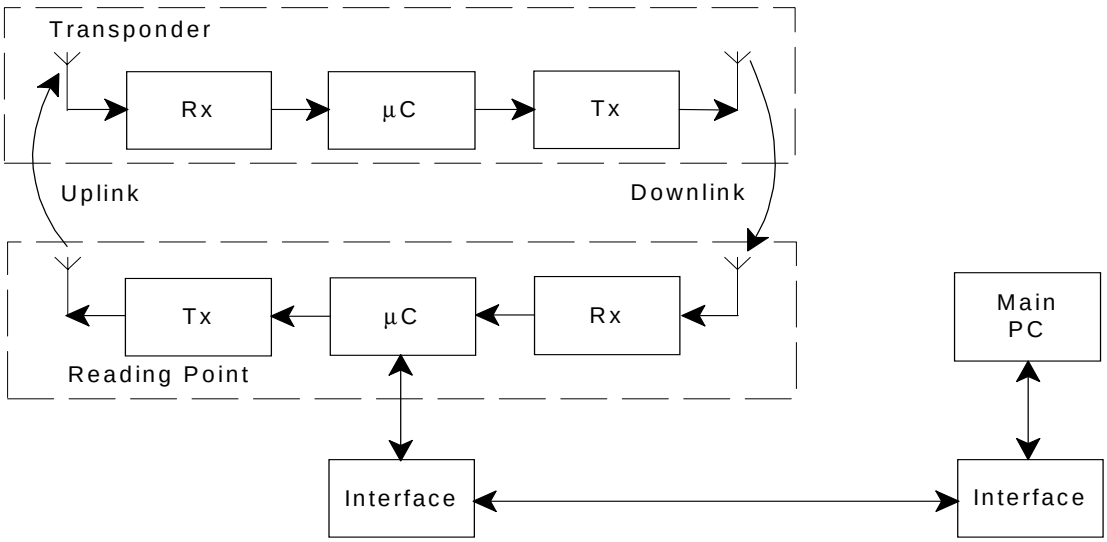


**Figure 1-1: RFID Concept**

# RFID Specific Terms

**Transponder**

Transponders are devices that receive an excitation signal, and respond by transmitting back a message. Transponders that are used in identification systems are sometimes referred to as *electronic tags* or *tags*.

**Excitation Signal**

The *excitation signal* is a form of electromagnetic energy and can operate anywhere in the RF spectrum from a low-radio frequency to infra-red light. It can also have a special *signature* (pattern, coding, etc.) to avoid false or unwanted excitations. When there is no excitation signal, the Transponder is dormant (in sleep mode). **Transponders do not transmit information involuntarily**.

**Response Signal**

The Transponder's response can be a separate RF transmission or a supplementary modulation of the excitation signal. The *response signal* contains information that allows you to identify: the transponder (the object to which it is attached), the reading point which excited the tag, battery status etc. Some or all of this information may be stored in memory that can either be pre-coded and unalterable, or re programmable.

**Reading Points**

*Reading Points* are installed at strategic areas on the site where you want to identify objects that are passing within a specified range. Reading Points generate the excitation signal and receive signals transmitted by the Transponders. Data captured from the Transponders is then transferred to the main computer. In so doing, the Reading Point functions as a *relay* or an *interface* that transfers data from the Transponders to the main computer and vice-versa.

**Communication Links**

When using Transponders and Reading Points, two wireless communication links exist. They are: *Uplink* - from the Reading Point to the Transponder, and *Downlink* - from the Transponder to the Reading Point.

**RFID System**

Automatic identification systems vary in their complexity. An example of a simple system is a car-park barrier that provides automatic vehicular-access control. A more complex example is a network of on-line Readers and Exciters that communicate with a host computer that is managing an automated industrial facility.

# Postal RFID System

The International Postal Corporation (IPC) required international end-to-end mail performance monitoring to implement new management and financial control systems. This monitoring and controlling is supported by an international agreement known as REIMS (Remunerating Exchanges of International Mails).

The Postal RFID System was developed in response to the IPC's requirements.

The main objective of the Postal RFID System is:

- To monitor the movement of the probe letters at key points in the system
- To supply evidence of mailing system performance
- To highlight problem areas.

By using a RFID system comprising of a population of Transponders and strategically placed Readers and Exciters, you can electronically monitor the path of test letters through the collection and delivery process, particularly at points between Postal administrations and their agents.

Each probe letter includes a RFID Transponder bearing a unique identification. The probe letters are posted, sorted, and delivered in the same way as normal letters. As they pass pre-determined points en-route (Reading Points/*identification zones*), the Transponders are identified. The collected information is then read and stored on local computers. This information is downloaded on demand to a Central Management System (CMS).

The Postal RFID System includes the following main specific equipment:

- Transponders PT21 carrying the identification data
- Exciters EX21 to generate an electromagnetic (LF) field that excites the Transponder PT21
- Readers RD21 to receive data transmitted by the Transponder PT21(UHF) and to relay this information via the RS-485 interface to the main computer
- Power Supply TRM95 to power Readers RD21 and Exciters EX21 from the local AC main supply.

**IMPORTANT** This manual refers to S21 features and equipment associated with RFID System S21.

## RFID System S21 Configuration Principles

The RFID System S21 is highly configurable, allowing you to setup operational parameters for the optimum performance of the System. The sections that follow give some basic information regarding the RFID System S21 configuration. A detailed description of the configuration, with a focus on an IPC implementation, is given in Chapter 5, *Configuration and Operation*.

### Communication Links

There are several communication links between the components of the RFID System S21. As a general rule, all equipment attached to a particular link must have the same parameters settings to communicate. Some communication links can be configured, others, however, have fixed configurations, as follows:

- Reader-to-Transponder: excitation (LF=125.0 kHz - uplink) - configurable;
  writing (LF) - fixed configuration.
- Transponder-to-Reader (UHF-433.92 MHz - downlink) - configurable.
- Reader-to-Exciter and Exciter-to-Reader (RS485_COM, RS485_SGN) - fixed configuration.
- Reader- to-Main PC and Main PC-to-Reader (RS232 or RS485) - configurable.

### System Parameters

Parameters controlling the RFID System S21's configuration are logically organized in groups. For a detailed explanation on the meaning and usage of the parameters, refer to the *RFID System S21 Reference Guide*. The parameters settings that control the hardware configuration, is described in Chapter 3, *Theory of Operation* in the *RFID System S21 Technical Guide*. This chapter gives reasons for using certain parameters for configuring the hardware.

### System Code

A Reader RD21 needs a System Code to function properly. You use the ISC parameter to set the System Code the first time. The System Code is a specially encoded number that distinguishes the RFID System from all other similar systems in use. By obtaining your System Code from Lyngsoe Systems, you are guaranteed a unique System Code.

**Reader Address**

When a Reader is part of a network, it must have a unique address. The address is set by the IAD parameter. Once the Reader has an address assigned, it will only process commands with the address field matching the Reader's address. In this way, you can direct commands over the network to a specific Reader.

**Real Time Clock**

The Reader RD21 has an on board Real Time Clock. Make sure that the date and time are correctly set. The time can be queried and set using the IUT parameter. The presence of the seconds field in the time stamp is optional and is controlled by the DTS parameter.

**Receiving UHF Data**

The Reader needs to know the data format in which the Transponder is transmitting information to properly receive and interpret the information. The Reader's setting can be checked and modified by the Group R parameters.

A simple method of matching an unknown Transponder with the Reader's parameters setting is given below:

1. Use the programming setup described in Chapter 6, *Programming and Testing the Transponder PT21*.
2. Query the Transponder. (See the Q command).
3. Check the Transponder's parameters using the Group T parameters.
4. Set an identical set of parameters for the Reader using the Group R parameters.

**Reader Data Handling**

Data that is captured from the Transponder is usually stored in an internal buffer. It is then sent to the monitoring equipment either voluntarily (if DAR=Y), or in response to a query command. You can customize the format and the fields using the Group D parameters. By setting appropriate values, you can greatly simplify the implementation of the monitoring software.

**Reader Serial Port**

When setting the serial port parameters, remember that communication with the monitoring equipment can result in a bottleneck in the RFID System. We recommend, therefore, using the highest baud-rate available. Also, the line turn-around delay (STD parameter) can greatly degrade the RFID System's performance. This parameter must be set to 0, unless required otherwise. For more information on the Group S parameters, refer to the *RFID System S21 Reference Guide.*

**Reader Reset**

There are two main ways to reset the Reader:

- Hardware reset
- Software reset.

For the hardware reset, switch off the Reader's power supply for a least 5 seconds.

For the software reset, press the RESET button on the Motherboard MBD21 twice, or type the command:

:RESET<Enter>

The software reset resets the Micro controller. The hardware reset resets the Micro controller and runs a complete memory test for receiver REC21.

### Exciter Address

When an Exciter EX21 is part of a network, it must have a unique address. You can set the Exciter's address in a binary format between 0001 and 1110, using the **S1** switch on the LFA21 board.

Once an address is assigned, the Exciter will only process commands with a matching address field. In this way, you can direct commands in the network to a specific Exciter EX21.

### Compatibility with RFID System 95

RFID system S21 can be configured as an RFID System S95. By changing the configuration, the S21 system can completely simulate the functionality of a S95 system. To implement this the following must be done:

- On the Exciter EX21[board LFA21] - set jumper P1 on the S95 Position.
- On the Reader RD21 [board CTL21] - set jumper P3 on the S95 position.
- Upgrade Reader RD21 software to version 6.10.06 or higher.

For more information regarding communications and upgrading firmware - see Appendix D.

This page is intentionally left blank.

# Chapter 2

# Reader RD21 Installation and Connections

This chapter explains how to:

- Install the Reader Module Assembly into the Reader's enclosure
- Connect the serial interfaces and the power supply
- Set the jumpers for interfaces
- Connect the external devices to the Reader RD21 (optional)

## Before You Begin

Before installing the Reader:

- Read Chapter 4, *Setup Guidelines* in the *RFID System S21 Technical Guide*.

- Have at your disposal, the complete approved documentation describing the RFID System configuration, equipment location, and wiring distances between the equipment (see the Site Survey Documentation).

- Check whether the Reader's enclosure, power supply and interconnection cable with the main PC are installed on the site according to the approved documentation (see the Site Survey Documentation).

- Set a color table for each interface and power supply cables. Pay special attention to the interface terminals, cable shields, and the ground wires.

- Check whether the Reader's Kit (P/N 600014) is complete according to the product shipping list.

- Check if jumper P3 on the board CTL21 is set on position S21.

## Mechanical Assembling

To assembly the Reader RD21, refer to assembly drawing in Chapter 8, *Lyngsoe Systems Reader RD21 (600002)*, and complete the following steps:

1. Install the RF assembly cables (P/N 500053) on the Reader's enclosure using a 13 mm fix key.

2. Install the Reader RD21 Module Assembly (P/N 500020) into the Enclosure Base and secure it using the four 6-32x1/4 inch screws from the Reader RD21 Kit.

3. Connect the two RF cables to the Receiver REC21 - RF inputs. The REC21 is the middle board of the Reader Module Assembly.

# Connecting the RS232 Communication Line

The RS232 data transmission line is used for point-to-point communication with a local PC. This connection can be used during the RFID System S21 configuration or troubleshooting. The RS232 connector and the selection jumper are located on the Motherboard MBD21. The MBD21 is the bottom board of the Reader Module Assembly.

**Note** For the RS232 line, use specially designed cables **only**, such as, BELDEN type 8102, or a standard PC cable used for RS232 interconnections. For more information, see the *RFID System S21 Technical Guide*.

To connect the RS-232 communication line to the Reader, refer to Figure 2-1 and.

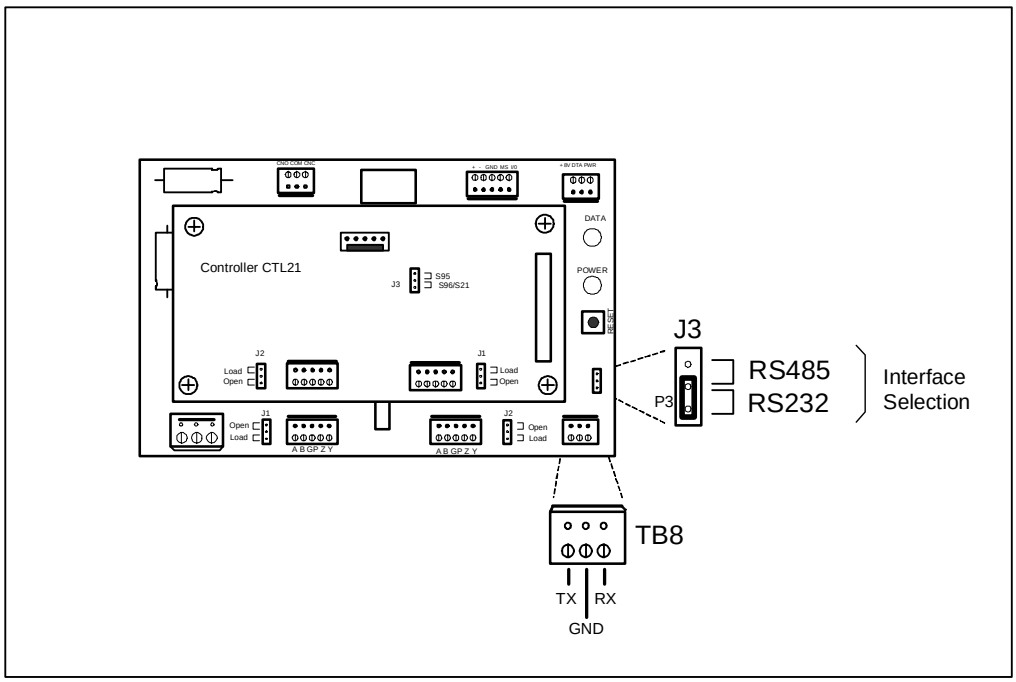


**Figure 2-1: Connections and Jumper Settings for the RS232 - PC Communication Line**

Complete the following steps:

1. Unplug terminal block TB8 from connector TB7.
2. Connect the communication wires TX, GND and RX to the corresponding TB8 pins. The TB7 connector pins are marked TX and RX on the Component side.
3. Place the jumper P3 between pins 1-2 of J3 (RS232 position).
4. Plug terminal block TB8 back into connector TB7.

# Connecting the RS485 Four-Wire Communication Line

The four-wire RS485 data-communication line must be used for connecting the Readers to the main system PC. For detailed information regarding the four-wire RS485 interface (full-duplex), see the *RFID System S21 Technical Guide*. The RS485 connectors and jumper are located on the Motherboard MBD21. The MBD21 is the bottom board of the Reader Module Assembly.

**Notes**

1. For RS485 line, use a specially designed cable **only**, such as, BELDEN type 9842, or similar. An alternate approved list of cable can be obtained from Lyngsoe Systems A/S. For more information, see the *RFID System S21 Technical Guide*.

2. To simplify the RS485 multidrop-type connection, the two RS485 connectors, TB4 and TB6 are wired in parallel on the MBD21. Connect the incoming RS485 cable to one connector and the out going RS485 cable to the other.

**Figure 2-2: Connections and Jumper Settings for the RS485 Four-Wire Communication Line**

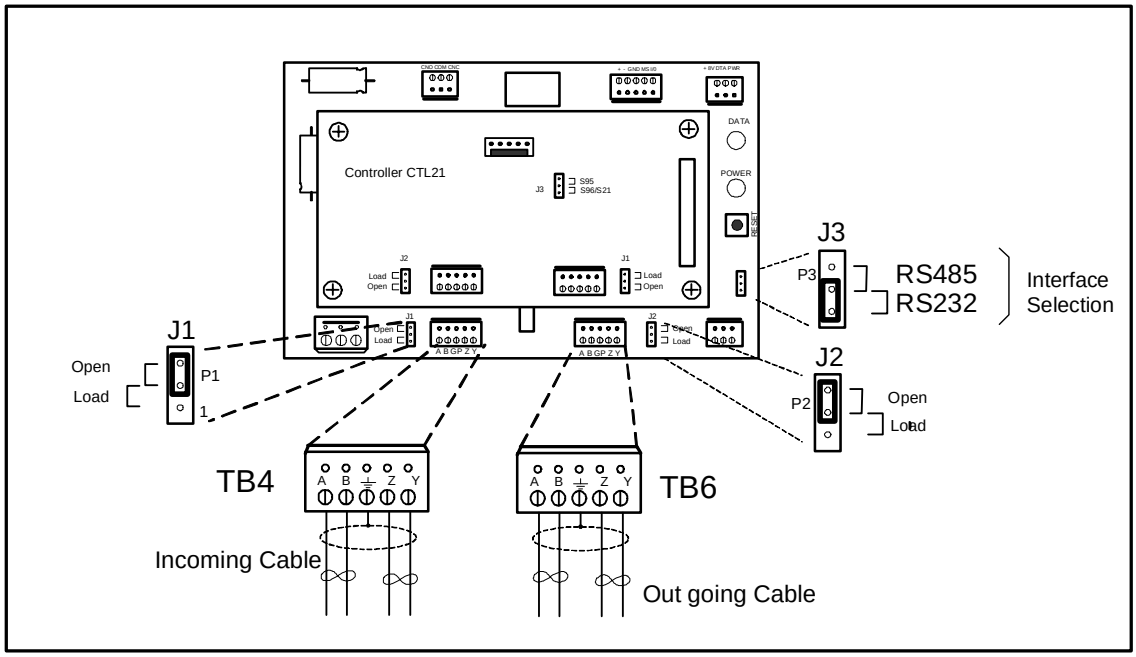


To connect the RS485 communication lines to the Reader, refer to Figure 2-2 and:

Complete the following steps:

1. Unplug terminal blocks TB4 and TB6 from connectors TB3 and TB5 respectively.

2. Run the RS485 incoming and out going cables through the cable grips into Reader's enclosure.

3. Connect the four-wire communication line to the corresponding pins A, B, Z and Y on terminal block TB4 (or TB6). Connect the cable shield to the pin indicated by the ground symbol on terminal block TB4 (or TB6).

**Note** The following receiver/transmitter pin assignment is used for the Reader RS485 interface: A -> R+, B -> R-, Y -> T+, Z -> T-.

**Caution** Before installing the RFID System, label the 4 wires of the RS485 line as A, B, Z and Y. Keep this naming convention for all connections made on this RS485 communication line.

4. Set the termination load for the RS485 communication line. The ends of a multidrop network line can be easily identified, because only one RS485 cable is connected to that equipment. To connect a 120 ohm terminating load, place the jumper P1 between pins 1-2 of J1(load position). If the equipment is not at the end of the RS485 communication line (two RS485 cables coming in), place the jumper P1 between pins 2-3 of J1 (Open position).

5. To select the RS485 interface, place the jumper P3 between pins 2-3 of J3.

6. Plug terminal blocks TB4 and TB6 into connectors TB3 and TB5 respectively.

## Connecting the Exciter Communication Line

Two separate RS485 two-wire interfaces are used to communicate between Readers and Exciters. For more information regarding the communication link, see the *RFID System S21 Technical Guide*. The RS485 connectors and jumpers for these lines are located on the Controller Board CTL21. The CTL21 is the top board of the Reader Module Assembly.

**Notes**

1. For the RS485 line, use specially designed cables **only**, such as, BELDEN type 9842, or similar.

2. To simplify the RS485 multidrop-type connection, the two RS485 connectors, TB4 and TB6, are wired in parallel on the MBD21. Connect the incoming RS485 cable to one connector and the out going RS485 cable to the other.

To connect Exciter communication lines to the Reader, refer to Figure 2-3 and:

Complete the following steps:

1. Unplug terminal blocks TB2 and TB4 from connectors TB1 and TB3 respectively.

2. Run the RS485 incoming and out going cables through the cable grips into the Reader's enclosure.

3. Connect the four-wire communication line to the corresponding pins A1, B1, A2, and B2 on terminal block TB2 (or TB4). Connect the cable shield to the pin marked **GP** on terminal block TB2 (or TB4).

**Figure 2-3: Connections and Jumper Settings for the Exciter Communication Line**

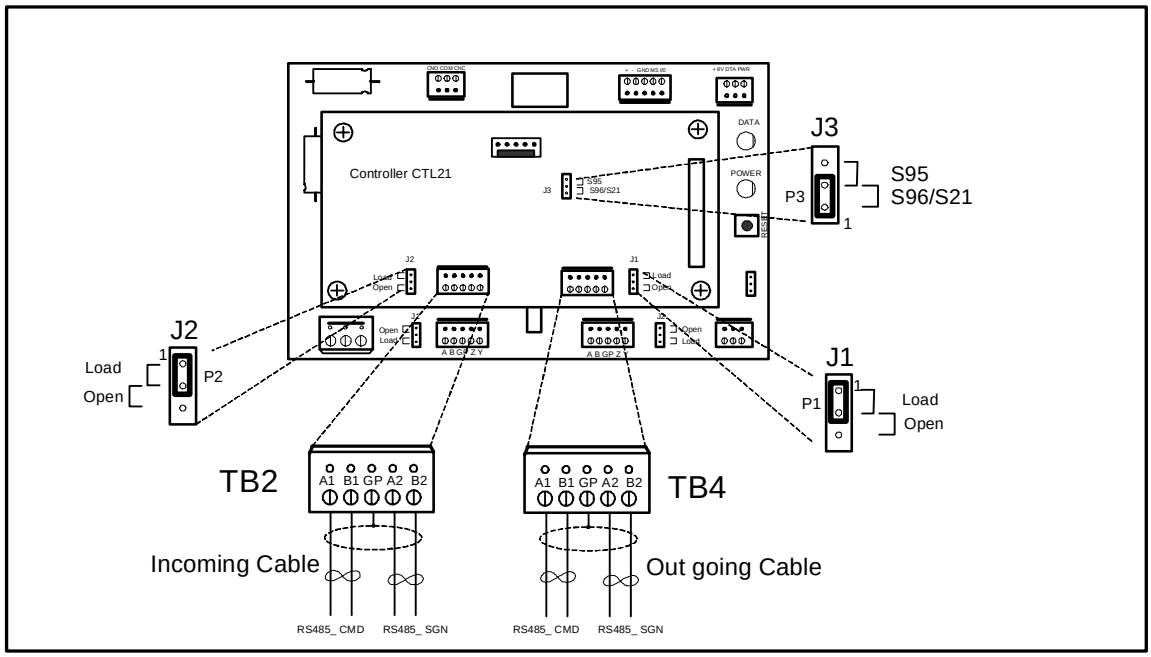


**Caution** Before installing the RFID System, label the two wires of one line of RS-485 as **A1** and **B1**, and the other two wires of RS485 as **A2** and **B2**. Keep this naming convention for all connections made on this communication line.

4. Set the termination load RS485 communication line for each two-wire line. The ends of a multidrop network line can be easily identified, because only one communication cable is connected to that equipment. To connect a 100 ohm terminating load on each separate RS485 line, place jumper P1 between pins 1-2 of J1(Load position), and jumper P2 between pins 1-2 of J2 (Load position). If the equipment is not at the end of the RS485 communication line (two RS485 cables coming in), place jumpers P1 between pins 2-3 of J1, and P2 between pins 2-3 of J2 respectively (open position).

5. Plug terminal blocks TB2 and TB4 into connectors TB1 and TB3 respectively.

## Connecting the Power Supply

The Reader RD21 requires a 12Vac or 13 to 16Vdc power source, and a maximum current of 0.3A. For more information on the Reader, see Appendix A, *Specifications*. The power supply connector is located on the Motherboard MBD21. The MBD21 is the bottom board of the Reader Module Assembly (P/N 500020).

**Notes**

1. To connect the power supply, use electrical wire gauge 16 AWG (minimum).

2. The main ground connection of the Reader is on the power supply connector. It is indicated by the ground symbol. Use an electrical wire with at least gauge 16AWG for the main ground connection.

3. To power up Reader RD21 we recommend using Power Supply, model TRM95 120V or TRM95 230V, as required by the local AC power line voltage.

4. Two different installation types exist: one Reader per power supply and multiple Readers per power supply.

**One Reader per power supply.**

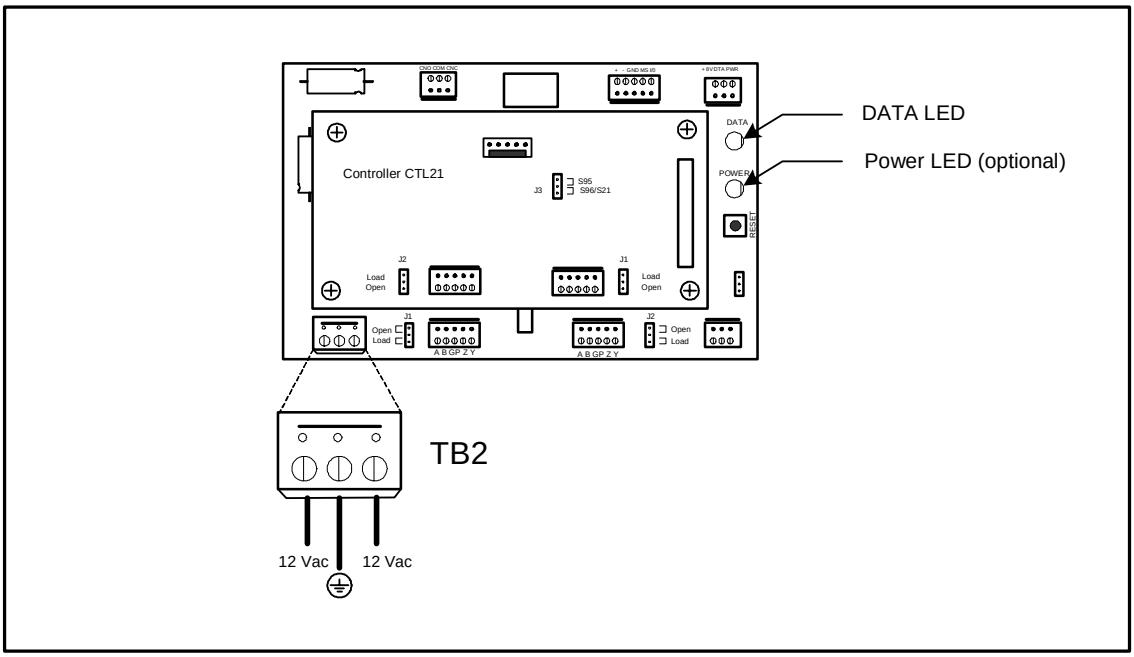


**Figure 2-4: One Reader per Power Supply Connection.**

To connet the power supply to Reader RD21, refer to Figure 2-4 and complete the following steps:

1. Unplug terminal block TB2 from its connector TB1.
2. Run the power supply cable through the cable grip into the Reader's enclosure.
3. Connect the power wires to the TB2 pins marked with the "~" symbol.
4. Connect the main ground connection to the TB2 pin marked with the ground symbol.
5. Switch on the power supply TRM95.
6. Check the voltage on terminal block TB2 (between pins marked with the "~" symbol).
7. Plug terminal block TB2 into its connector TB1.
8. Re-check the voltage on the terminal block TB2 in Step 6.
9. Check the MBD21 to see whether the POWER LED goes ON, and the DATA LED stays ON continuously for 6-7 seconds and then turns OFF.
10. Switch off the power supply.

**Note** For this installation an isolation transformer is not required. However, if it is installed, the equipment still can be used in a one Reader per power supply configuration but it should be connected as if it is a part of a multiple Readers per power supply configuration (see Figure 2-5).

**Multiple Readers per power supply.**

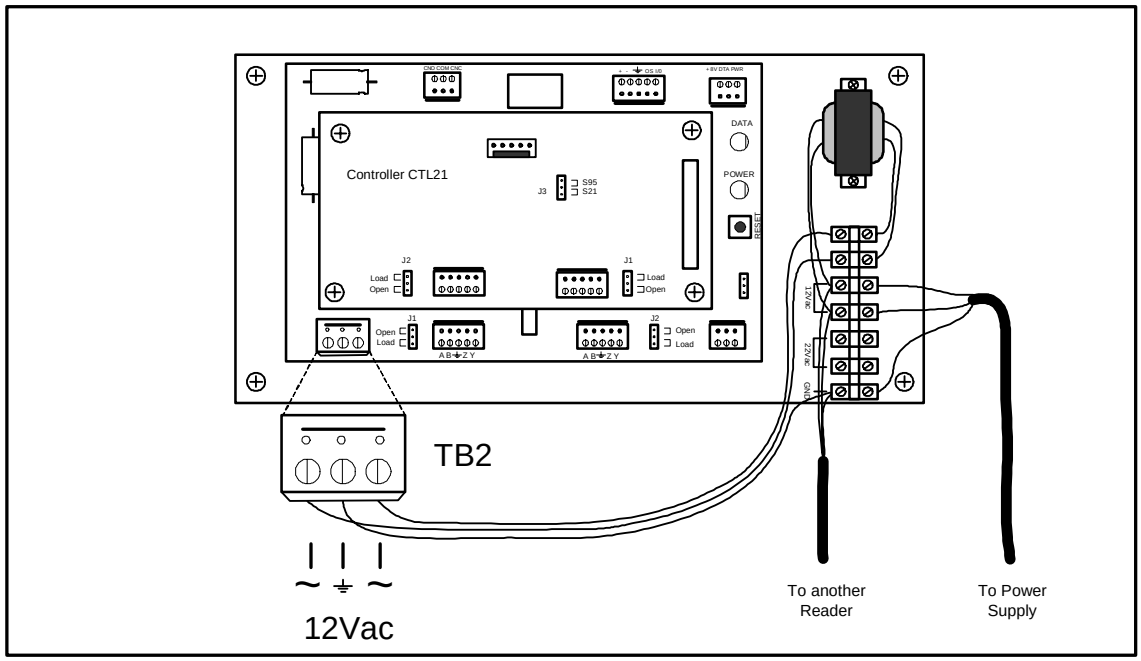


**Figure 2-5: Multiple Readers per Power Supply Connection.**

To connet the power supply to Reader RD21, refer to Figure 2-5 and complete the following steps:

1. Unplug terminal block TB2 from its connector TB1.
2. Run the power supply cable through the cable grip into the Reader's enclosure.
3. Connect the power wires to the input of the transformer using terminal block pins marked 12Vac as shown in the Figure 2-5.
4. Connect the output of the transformer to TB2 pins marked "~" using the terminal block as shown in Figure 2-5.
5. Run the main ground connection to TB2 using terminal block pin marked GND as shown in Figure 2-5.
6. Run the power cable to another Reader if required.
7. Switch on the power supply TRM95.
8. Check the voltage on terminal block TB2 (between pins marked with the "~" symbol).
9. Plug terminal block TB2 into its connector TB1.
10. Re-check the voltage on the terminal block TB2 in Step 8.
11. Check the MBD21 to see whether the POWER LED goes ON, and the DATA LED stays ON continuously for 6-7 seconds and then turns OFF.

12. Switch off the power supply.

**Note** Terminal block pins marked 22Vac and GND can be used to transit Exciter power wires if they are run through the Reader enclosure.

## Connecting External Devices

Figure 2-6 shows you how to connect external devices to the Reader.

**Caution** Do not exceed the maximum ratings for the relay contacts and Motion Sensor input as stated in Appendix A, *Specifications.*

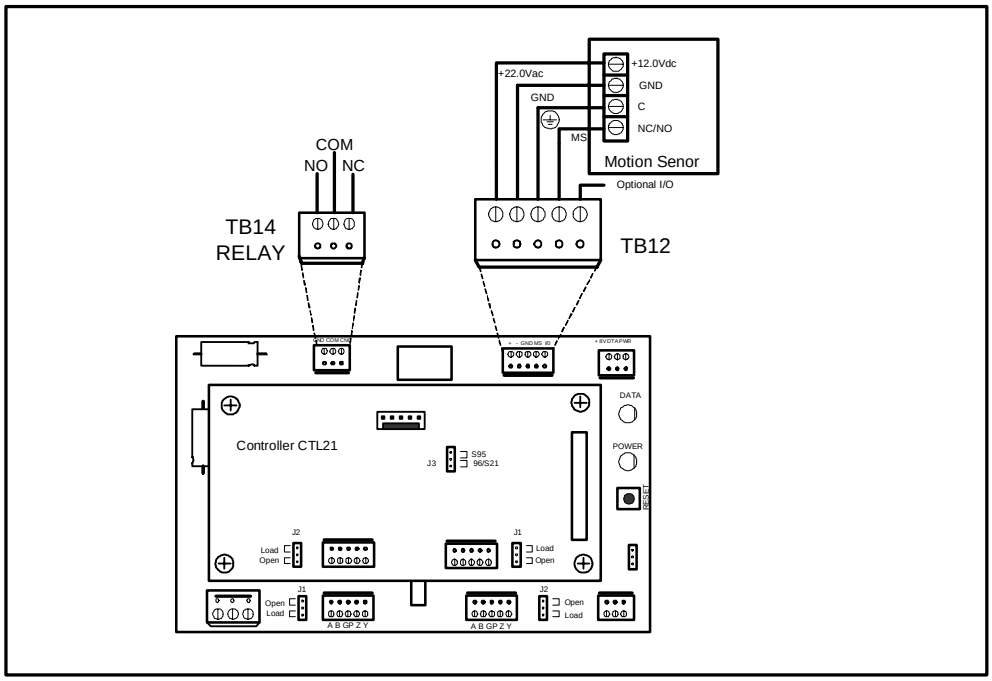


**Figure 2-6: External Devices Connections**

# Chapter 3

# Exciter EX21 Installation and Connections

This chapter explains how to:

- Assemble the Exciter EX21 using LF EX21 Antenna Kit (P/N 600007) and EX21 Enclosure Kit (P/N 600005)
- Make the LF antenna connections
- Connect serial interfaces and power supply
- Set the jumpers for interfaces

## Before You Begin

Before starting the installation:

- Read Chapter 4, *Setup Guidelines* in the *RFID System S21 Technical Guide*.
- Have at your disposal, the complete approved documentation describing the RFID System configuration, equipment location, and wiring distances between equipment (see the Site Survey Documentation).
- Check whether the mechanical supports for the Exciters are installed on the site according to the approved documentation (see the Site Survey Documentation).
- Set a color table for the serial interfaces and power supply cables. Pay special attention to the interface terminals, cable shield, and the ground wires.
- Check whether the EX21 Antenna Kit (P/N 600007) and EX21 Enclosure Kit (P/N 600005) are complete, according to the product shipping list.
- Check if jumper P1 on LFA21 board is set on the S21 position.

### Tools

To install the Exciter EX21, you will need the following tools:

- Screwdriver SR1 (square recess # 1)
- Rubber mallet
- Hexagonal fix key # 10

# Mechanical Assembling

To assemble the Exciter EX21, refer to EX21 General Assembly drawing and complete the following steps.

## Assembling the LF Antenna for EX21

The antenna frame consists of five separate segments, each with the following dimensions: two pieces - 0.4m long, two pieces - 2.0m long, and one piece - 1.0m long. Each segment includes an aluminum tube with an internal rubber hose. The segments are joined together using plastic corners. The antenna cable (7-wire cable) runs through the rubber hose spacers inside the aluminum tubes.

To assemble the antenna, do the following:

1. Starting with one side of the antenna frame that is beside the plastic enclosure (0.4 m segment), place the corresponding rubber hose inside the aluminum tube, and run the antenna cable through the rubber hose. Run the cable through a plastic corner, and secure the plastic corner inside the aluminum tube using a rubber mallet.

2. Repeat Step 1 for each side of the frame, finishing with the last short segment (0.4m). You should have a 1x2m rectangular aluminum frame with the antenna cable inside.

3. Terminate the antenna frame with the plastic base connectors.

4. Place the 90° brackets on each ends of the frame, and secure the frame against the plastic enclosure using M6 screws, washers and nuts.

5. Connect the antenna frame to the LFA21 ground using the cable provided. Place one terminal lug of the cable on the M6 screw and the other under one screw which holds the LFA21 board in place as shown on the assembly drawing.

**Note** Always ensure that the ends of the antenna cable inside the plastic enclosure have at least - 110mm respective - 360mm long. For more information, see EX21 General Assembly drawing.

6. Use the self-drill screws (M3.5x9.5) to secure the 1 inch square aluminum tube in each corner of the LF antenna frame, and to secure the 90° brackets against the aluminum tubes.

For tuning procedures refer to procedure 950031.

# LF Antenna Connections

The LF antenna is a 7-turn loop coil with the tap at the first turn. To create this multiturn loop and the proper tap connection, complete the following steps:

1. Position the antenna cable inside the plastic box as shown in EX21 Assembly. Cut the end closest to the terminal block - 110mm long, and the other - 360mm long.

2. Remove 80mm of the outside cable jacket, and strip about 8mm from each conductor isolation.

3. Use a crimping tool to connect cable conductors in the butt splices as shown in Figure 3-1.

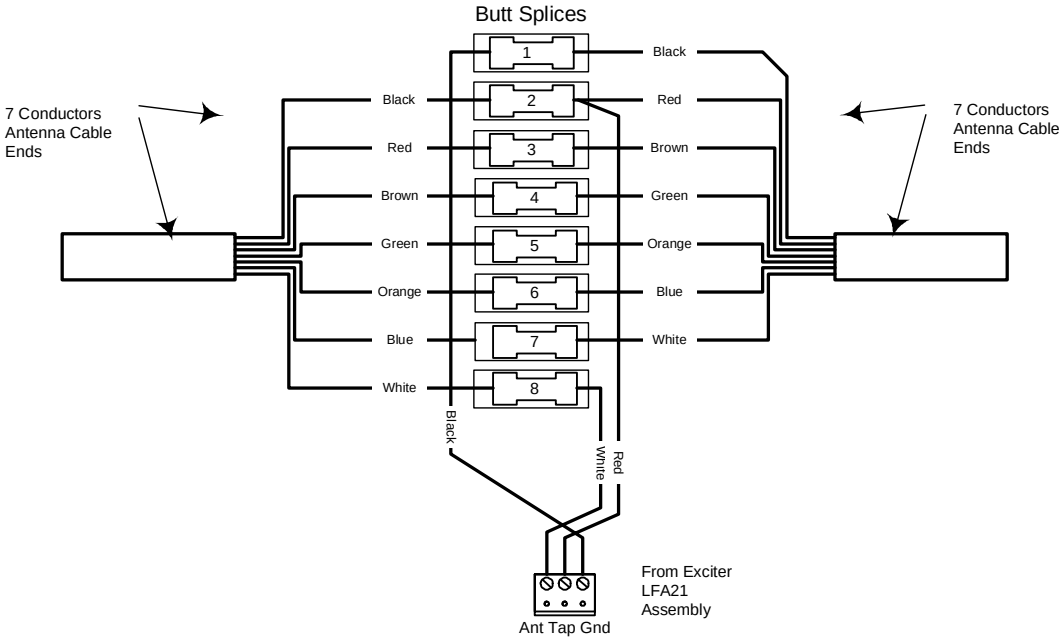


**Figure 3-1: LF Antenna Connections**

# Connecting the RS485 Communication Lines

The RS485 connectors and jumpers are located on the LFA21 assembly placed inside the plastic enclosure (see the assembly drawing 900061). Two separate RS485 two-wire lines are used to transmit data from/to the Reader. For detailed information on the RS485 two-wires interface (half-duplex), see the *RFID System S21 Technical Guide*.

**Notes**

1. For the RS485 line, use specially designed cables **only**, such as BELDEN type 9842, or similar. For more information, see the *RFID System S21 Technical Guide.*

2. To simplify the RS485 multidrop-type connection, the two RS485 connectors, TB4 and TB6 are wired in parallel on the LFA21 board. Connect the RS485 incoming cable to one connector and the RS485 out going cable to the other.

To connect RS485 communication lines to the LFA21, refer to Figure 3-2 below.

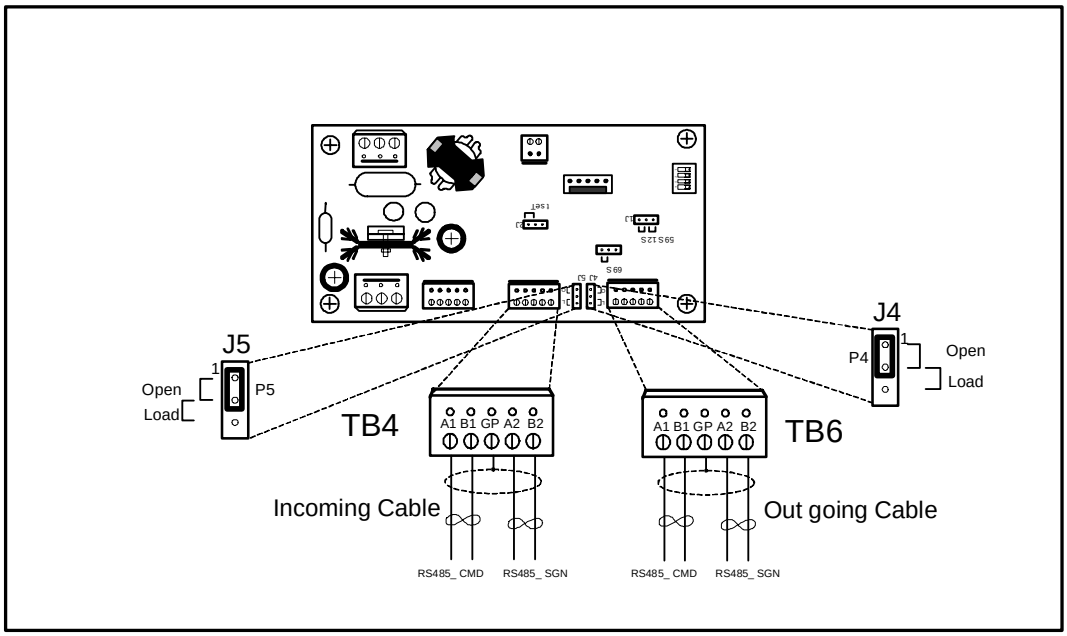


**Figure 3-2: Connections and Jumpers Settings for the RS485 Communication Lines**

complete the following steps:

1. Unplug terminal blocks TB4 and TB6 from connectors TB3 and TB5 respectively.

2. Run the RS485 incoming and out going cables through the cable grips into the plastic enclosure.

3. Connect the RS485_CMD line to pins A1, B1, and RS485_SGN line to the pins A2, B2 on terminal block TB4 (or TB6). Connect the cable shield to the pin marked **G** on terminal block TB4 (or TB6).

**Caution**

Before installing the RFID System, label the 2 wires on the RS485_CMD line **A1** and **B1**; label the 2 wires on the RS485_SGN line **A2** and **B2**. Keep this naming / wire colour convention for all connections made on these RS-485 communication lines.

4. Set the terminating load for the each RS485 communication line. The ends of a multidrop-network line could be easily identified, because only one cable is connected to the equipment.To connect a 100 ohm terminating load to the RS485_CMD line, place the jumper P2 between pins 1-2 of J4. When connecting any other equipment to this RS485 communication line, place the jumper P2 between pins 2-3 of J4.

   To connect a 100 ohm terminating load to the RS485_SGN line, place the jumper P3 between pins 1-2 of J5 (Load position). When connecting any other equipment to this RS-485 communication line, place the jumper P3 between pins 2-3 of J5 (Open position).

5. Plug terminal blocks TB4 and TB6 into connectors TB3 and TB5 respectively.

## Connecting the Power Supply

The Exciter requires a 22 Vac or 23 to 28 Vdc power source, and a maximum current of 0.5 A. For more information, refer to Appendix A, *Specifications*.

**Notes**

1. The power connector is located on the LFA21 assembly.
2. Use an electrical wire with at least a 16 AWG gauge to connect the power supply.
3. The Exciter's main ground connection is on the power supply connector. It is indicated by the ground symbol. Use an electrical wire with at least a 16 AWG gauge for the main ground connection.
4. To power the LFA21, we recommend using Lyngsoe's Power Supply, model TRM95/120V or TRM95/230V, as required by the local AC power line voltage.
5. There are two basic types of installation: one Exciter per power supply and multiple Exciters per power supply.

**One Exiter per power supply.**

To connect the power supply to the Exciter, refer to Figure 3-3.

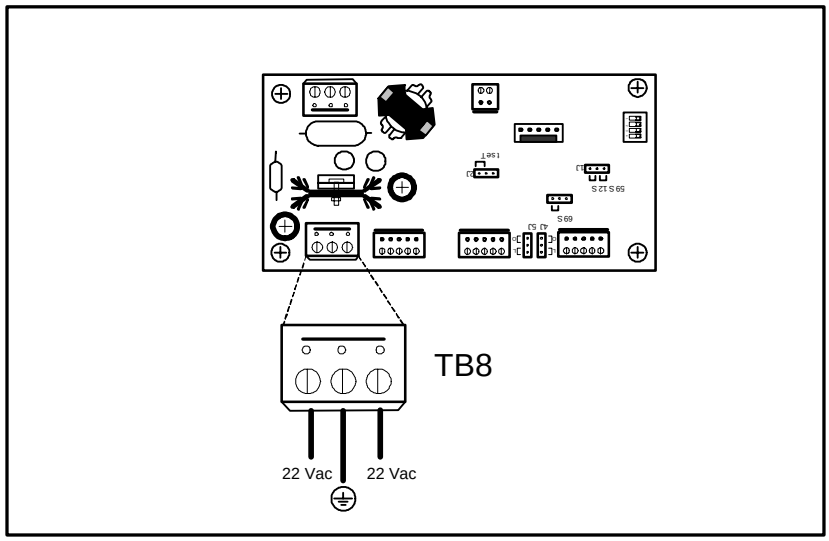


**Figure 3-3: One Exciter per Power Supply Connection.**

Complete the following steps:

1. Remove terminal block TB8 from connector TB7 on the LFA21 board.
2. Run the power supply cable through the cable grip into the plastic enclosure.
3. Connect power wires to the TB8 pins marked with the "~" symbol.
4. Connect the main ground connection to the TB8 pin marked with the ground symbol.

5. Switch on the power supply.

6. Check the voltage on the terminal block TB8 (between pins 1-3).

7. Plug terminal block TB8 into connector TB7.

8. Re-check the voltage in Step 6.

9. Check whether the voltage between pins 1 (Test) of J2 and Ground is 5.0 ± 0.2 V.

10. Switch off the power supply.

**Note** For this installation an isolation transformer is not required. However, if it is installed, the equipment still can be used in a one Exciter per power supply configuration but it should be connected as if it is a part of the multiple Exciters per power supply configuration (see Figure 3-4).

**Multiple Exiters per power supply.**

To connect the power supply to the Exciter, refer to Figure 3-4.

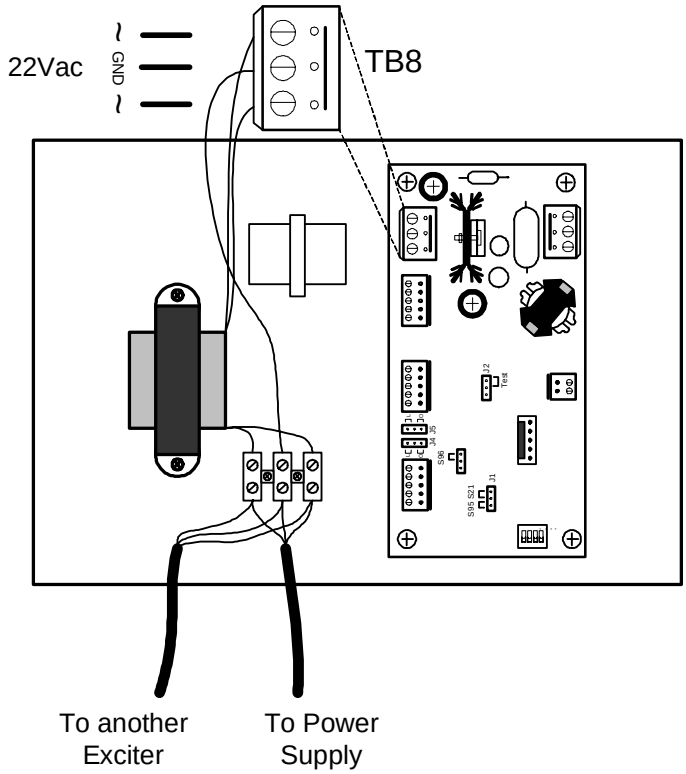


**Figure 3-4: Multiple Exciters per Power Supply Connection.**

Complete the following steps:

1. Remove terminal block TB8 from connector TB7 on the LFA21 board.

2. Run the power supply cable through the cable grip into the plastic enclosure.

3. Connect the power wires to the transformer input wires using terminal block as shown in Figure 3-4.

4. Connect the transformer output wires to the TB8 pins marked with the “~” symbol.
5. Connect the main ground connection to the TB8 pin marked with the ground symbol using the terminal block (see Figure 3-4).
6. Run the power cable to another Exciter if required.
7. Switch on the power supply.
8. Check the voltage on the terminal block TB8 (between pins 1-3).
9. Plug terminal block TB8 into connector TB7.
10. Re-check the voltage in Step 8.
11. Check whether the voltage between pins 1 (Test) of J2 and Ground is 5.0 ± 0.2 V.
12. Switch off the power supply.

## Assembling Other Models of Exciters

Lyngsoe provides other models of Exciters with different antenna frame sizes for particular installations. For mechanical assembling and electrical connections, use a similar procedure as described in the previous paragraphs.

This page is intentionally left blank.

# Chapter 4

# Power Supply TRM95 Installation and Connection

This chapter explains how to:

- Install the Power Supply
- Make the input line and output connections

All data provided in this chapter apply to both Power Supply models TRM95/120V (P/N 600579) and TRM95/230V (P/N 600626).

## Before you Begin

Before installing the Power Supply:

- Read Chapter 4, *Setup Guidelines* in the *RFID System S21 Technical Guide*.
- Have at your disposal, the complete approved documentation describing the RFID System configuration, equipment location, and wiring distances between equipment (see the Site Survey Documentation).
- Check whether the mechanical supports for the Power Supply is installed on the site according to the documentation.
- Check whether all cables are installed on the site according to the documentation (type, protection, routing, etc.).
- Check whether the Power Supply unit has the correct rating (120V or 230V) that is suitable for the local AC power lines voltage.

### Tools

To install the Power Supply, you will need the following tools:

- Phillips screwdriver size # 1)
- Slotted screwdriver 2mm

## Installing Power Supply TRM95

For mechanical details, refer to the Power Supply assembly drawing (600579).

### Placement

The Power Supply unit can be installed either horizontally or vertically, but must be secured against its mechanical support with 4 screw (dia. 1/8"). It must be installed in such a way that the front is easily accessible and visible for inspection. This unit is designed for indoor use only. You should avoid installing the Power Supply unit in locations where there is water or excessive humidity. To reduce the risk of overheating, avoid exposing the Power Supply unit to direct sunlight or near any heat-emitting devices, such as a room heater or a stove.

**Safety**

Please adhere to the following safety precautions:

1. Only authorized personnel are qualified to install and repair the Power Supply unit.

**Caution**

To reduce the risk of an electrical shock, disconnect the AC main supply before removing the unit's cover.

2. Use only approved (CSA,UL, IEC) fuses, size 5x20mm, Type "T" (slow-blow), with appropriate rating (1A for 120Vac, or 0.5A for 230Vac). The correct fuse rating is marked on the front panel of the Power Supply unit.

3. Ensure that the Power Supply unit is properly grounded. Always connect the unit to the 3-wire (with grounding) power systems.

4. Ensure that no water or foreign objects get inside the unit.

## Wiring Connections and Supply

For access inside the equipment for connection, first unscrew the two screws that secure the cover. Remove the screws and lift the cover from the chassis.

**Note**

To completely detach the cover, you must also remove the cover's ground connection. Remember the ground connections must be in place when the unit is operating normally.

All unused knockout-punch holes (front and back panels) must be plugged with plugs or similar stoppers. Lyngsoe recommends using the Hole Plug PG11 (P/N 400617) with a Polyamid Nut (P/N 400645). You have to order these parts separately.

You must secure all cables passing through the front or back panel with cable grips or connectors (these are not provided). The connectors must match the conduit type used to protect the cable outside the Power Supply unit. For more information on these parts, contact Lyngsoe Industries.

For all interconnections (power line, equipment), Lyngsoe recommends using cable type SJT, PVC jacketed, 3-conductors with a minimum gauge of 16 AWG (0.75 $mm^2$ - conductor nominal cross-sectional area). Lyngsoe recommends BELDEN cable type 19353.

An external disconnecting device will be provided as part of the building's installation. The disconnecting device will have an appropriate rating for the AC power line voltage (minimum 1A for 120Vac or 0.5A for 230Vac). Installation of the external wiring will comply with the national wiring rules (code) applicable to the site.

## Connecting Equipment to the Power Supply Unit

The TRM95 unit has 2 separate outputs (12Vac/1A and 22Vac/2A) to power up Readers RD21 and Exciters EX21. Inputs AC mains and output voltages must be connected to the terminal block placed inside TRM95 and clearly marked.

**Attention**

Do not exceed the load ratings specified for each output: 1A for the 12Vac, and 2A for the 22Vac. On the 22Vac source, the 2 terminal blocks are connected in parallel for each output terminal. Always use a 3-wire cable to connect the equipment to the Power Supply unit. Always connect the ground wire of each cable to the terminal block that is indicated by ⏚

## Connecting the AC Mains Supply

Connect the power lines cable to the internal terminal block of the TRM95 unit as follows:

- Live (phase) - to the terminal marked **L**
- Neutral - to the terminal **N**
- Ground - to the terminal marked ⏚

For more information, see Chapter 8, *Lyngsoe Systems TRM95 Power Supply (600579) & (600626)*.

**IMPORTANT**

Before you connect power to the Power Supply unit, re-check the following:

- The Power Supply model and rating against the installation plan and line voltage
- The Power Supply fuse rating
- All cable connections to the Power Supply’s internal terminal block
- All cable access into the Power Supply’s enclosure, making sur that they are properly secured and protected.

This page intentionally left blank.

# Chapter 5

# Configuration and Operation

This chapter explains how to set-up and configure a RFID System S21. The IPC implementation is a practical example of the RFID System S21 configuration. For more information about the RFID System S21 configuration, refer to the *RFID System S21 Technical Guide*.

## Before You Begin

Before starting the RFID System S21 configuration, do the following:

1. Check whether all equipment is correctly installed and interconnected according to the requirements stated in Chapter 2, *Reader RD21 Installation and Connections* and Chapter 3, *Exciter EX21 Installation and Connections* in this guide.

2. Check if each Reader and Exciter has a unique address according the approved documentation describing the RFID System configuration (see the specific Site Survey documentation).

3. Familiarize yourself with the instructions format described in the *RFID System S21 Reference Guide*, and the system's functionality described in the *RFID System S21 Technical Guide.*

4. Refer to the section, *RFID System S21 Configuration Principles* on page 1-3, for some general explanations on configuring the RFID System S21. Pay special attention that the jumpers on the CTL21 and LFA21 are set for S21 operation.

## General Procedure Rules

**Each Reader and Exciter in the RFID System must be configured individually**.

Lyngsoe recommends that you follow the general rules listed below:

1. Configure each *Reading Point*, one by one. *Each Reading* Point is defined and controlled by a reader. Configuration of the Reader and interconnected Exciters is accomplished by connecting a PC to the serial communication link.

2. Follow the step-by-step instructions described in this chapter.

3. If you do not obtain the expected results, refer to Chapter 7, *Troubleshooting*.

# Setting Up the Reader/PC Connection

To connect the Reader to a PC, do the following:

1. Use the RS232 or RS485 communication line to connect the Reader to the PC. For more information on these communication lines, see *Connecting the RS232 Communication Line*, and *Connecting the RS485 Four-Wire Communication Line* in Chapter 2.

For the initial set-up, the connection with a local, mobile PC (Laptop) can be realized using an RS232 interface as shown in Figure 5-1 below.

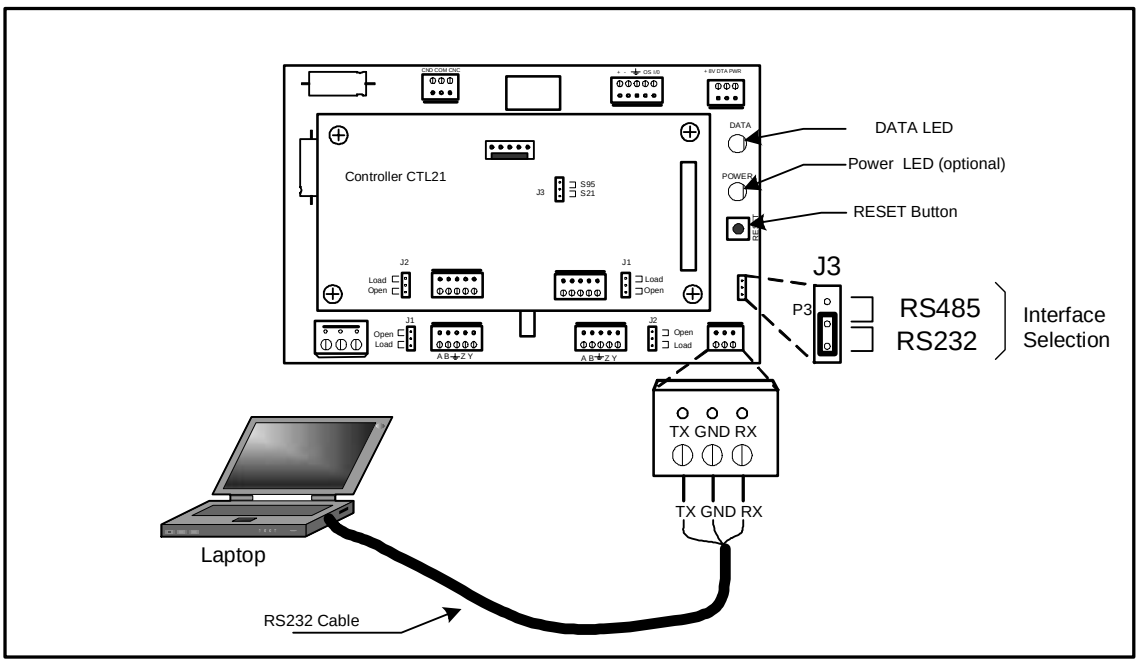


**Figure 5-1: Connecting the Reader to a PC/Laptop using RS232 interface.**

Alternatively, the PC/Laptop can be connected to Reader's RS485 interface.In this case, the specially designed RS485 Tester and Connecting Board CBD16 (both products of Lyngsoe Systems) can be used. The usage of a third party RS485 converter is not recommended due to different technical standards used by different manufacturers. The set-up is shown in Figure 5-2

.

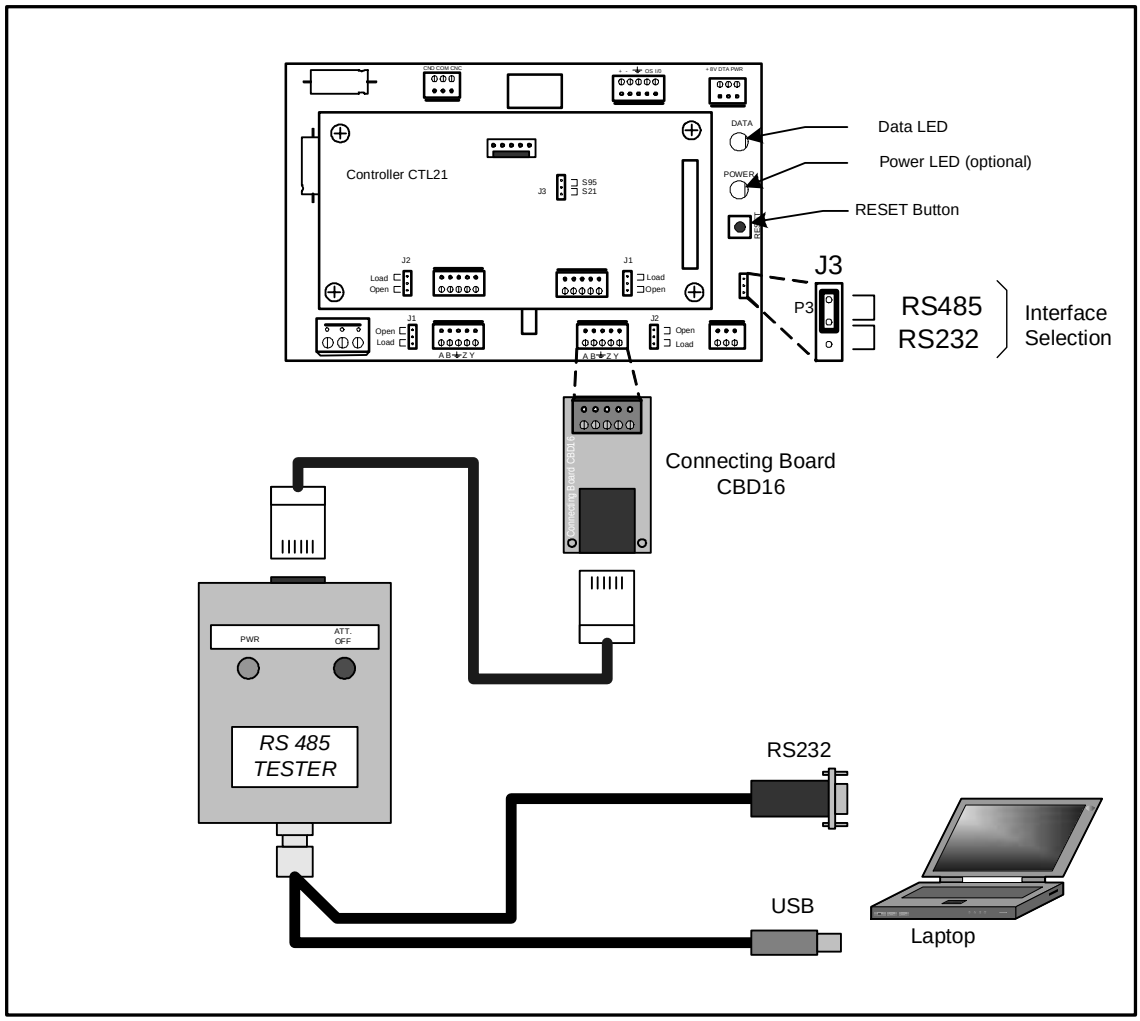


**Figure 5-2: Connecting the Reader to a PC/Laptop using RS485 interface.**

2. Run a terminal emulation program on the PC, such as, Hyper Terminal in MS Windows. The recommended configuration for the PC port is:

- Data rate - 19200 bps
- Data bits - 8 bits
- Parity - none
- Stop bits - 1
- Flow control - none

## Reader's Power-up Sequence

To verify the Reader's power-up sequence, do the following:

1. Connect the power supply to the Reader.

2. Check whether the relay on the MBD21 board immediately clicks, and the POWER LED is on (See Figure 5-1).

3. Check whether the Reader performs the following power-on test sequence: the DATA LED on the MBD21 board remains ON for 6-7 seconds. Afterwards, the following sign-on message is displayed on the PC's screen:

```
Receiver REC21 (C) Copyright Lyngsoe Systems Ltd 2003.
```

**Notes**

1. If the Reader does not have assigned a System Code identification number (SC) or one or more manufacturing calibration parameters are missing, then the DATA LED will flash On and Off at a rate of 1.4 Hz. To set the calibration parameters, return the Reader for re-calibration. To set the System Code, type:

   ISC=[*your SC*] <Enter>

2. If a string of unrecognizable characters appears on the PC's screen, it means that the communication link between the Reader and the PC is not set properly. Run the *Learning Procedure*, as described below, to establish the correct settings.

## Learning Procedure (Optional)

This a special mode of operation, specifically designed to allow a Reader to communicate with the PC to which it is attached, by adapting itself to the serial frame format that the PC is using.

To force the Reader into the *learning* mode, follow the steps below. (See Figure 5-1).

1. Press the RESET button once.

2. Verify whether the DATA LED flashes at a rate of 2 Hz. This means that the Reader is in the learning mode, and is waiting to determine the frame format sent by the PC.

3. Send a few characters to the Reader, for example, LYNGSOE.

4. When the learning process is finished, the DATA LED will start flashing at 1.4 Hz rate and the following message will be displayed on the PC:

```
Learned: rate, parity, bits
```

where:

*rate*: is the serial data rate (baud) expressed as a numeric value, for example,**19200**.
*parity*: is a single character that reports the parity bit: **N** for no parity, **Y** for parity.
*bits*: is a single digit (7 or 8) that reports the number of bits per character.

5. Check the Reader's current serial communication configuration parameters by using the group of S parameters. You can change the settings for the PC or Reader so that the settings match each other. If you modify the Reader's parameters, you must save them before leaving the

learning mode. For more information on this procedure, see *Storing the Reader's Configuration* on page 5-17.

6. Press the RESET button again to exit from the learning mode.

7. The DATA LED will stop flashing.

**Notes**

1. The serial communication configuration for an IPC application has the default values for the group of S parameters. For more information on the group of S parameters, refer to the *RFID System S21 Reference Guide*.

2. If the noise and interference level on the UHF channel exceeds the carrier threshold or a Transponder is transmitting information, the DATA LED will start flashing at a faster rate.

## Resetting the Reader

There are 2 ways to reset the Reader (see Figure 5-1):

- By resetting the hardware
- By resetting the software

For a hardware reset, switch off the Reader's power supply for a least 5 seconds.

For a software reset, you can:

1. Press the RESET button twice.

   or

2. Type the following command at the prompt:

   :RESET <Enter>

## Checking the Reader's Basic Parameters

To check basic parameters of the Reader, do the following:

1. Check the software version number by typing:

   IVN <Enter>

   The response should be:

```
IVN=REC21 V_.__.__., BUILT: __/__/__ __:__:__.
```

**Note** You can upgrade the Reader software, if necessary. For more information on upgrading the software, refer to Appendix D, *Reader Software Upgrade Procedure.*

2. Check the System Code (SC), by typing:

   ISC<Enter>

   The response should be:

ISC= [*your SC*]

   If the displayed System Code is not identical with the application system code number, replace the Reader and report the problem to Lyngsoe.

3. Check the Receiver's Serial Number (SN), by typing:

   ISN<Enter>

   If the displayed serial number is not equal to the serial number on the Receiver's REC21 board, set it to the correct value. For example, if the SN is U123456, then type:

   ISN=*U123456*<Enter>

4. Store the new SN and/or SC parameter values, by typing:

   :CONFIG:STORE <Enter>
   :RESET <Enter>

5. Check if the IVN, ISC, and ISN parameters have correct values, by repeating Steps 1 to 3.

6. Switch off the LF field, by typing:

   C<Enter>

# Setting Up the Exciter's Address

Your next step is to setup an address for each Exciter by using the **S1** slide switch on the LFA21 board, as shown in Figure 5-3.

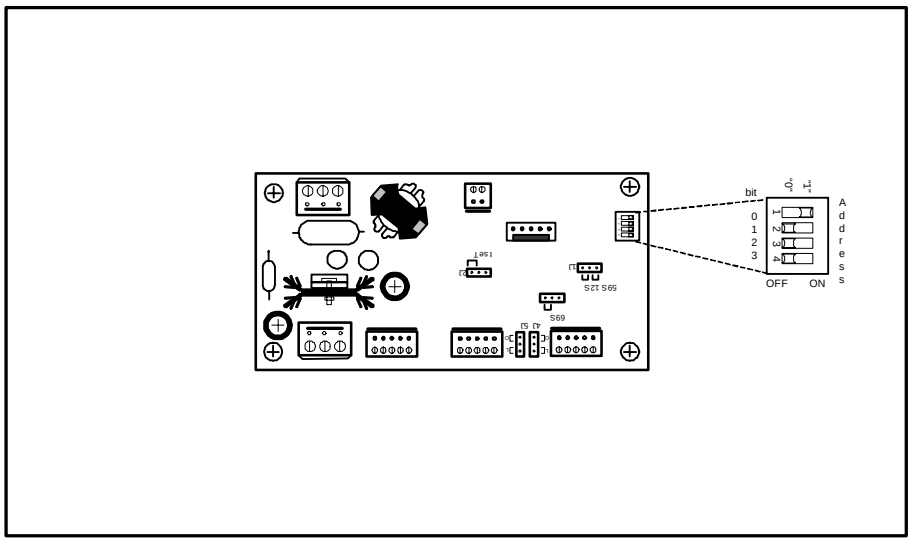


**Figure 5-3: Setting Up the Exciter's Address**

The addresses must be sequential between 1 and 14. For example, if there are 4 Exciters, they must be assigned addresses 1, 2, 3, and 4. Use the **S1** switch to set the address to binary format. For example, in binary format:

- address 1 is $0001_2$
- address 2 is $0010_2$
- address 3 is $0011_2$
- address 4 is $0100_2$

If the switch is in the ON position, the bit is set to "1". Otherwise, the bit is set to "0".The factory default address setting is address 1 [$0001_2$]

**Note** Figure 5-3 displays the S1 setting for address 1.

# LF Transmitter Output

The type of the generated LF excitation signals depends on the the position of “System” jumpers on the LFA21 and CTL21.

For “System S21” jumpers J1 (LFA21) and J3 (CTL21) are to be set on S21 position. The LF excitation signal generated is of type EXID. This signal is a continuous OOK signal on 125 KHz. The modulation is a fixed repetitive frame [Excitation ID] containing the address of the reading point. (Reader Address).

For “System 95” jumpers J1 (LFA21) and J3 (CTL21) are to be set on S95 position. The LF excitation signal generated is of type CSAC. This signal is defined in the *Appendix C*. To properly set the transmitter output for “System 95” please refer to the *“95 Series RFID Systems User’s Guide”*.

To set the LF signal for “System S21”, refer to Figure 5-4 below, and do the following:

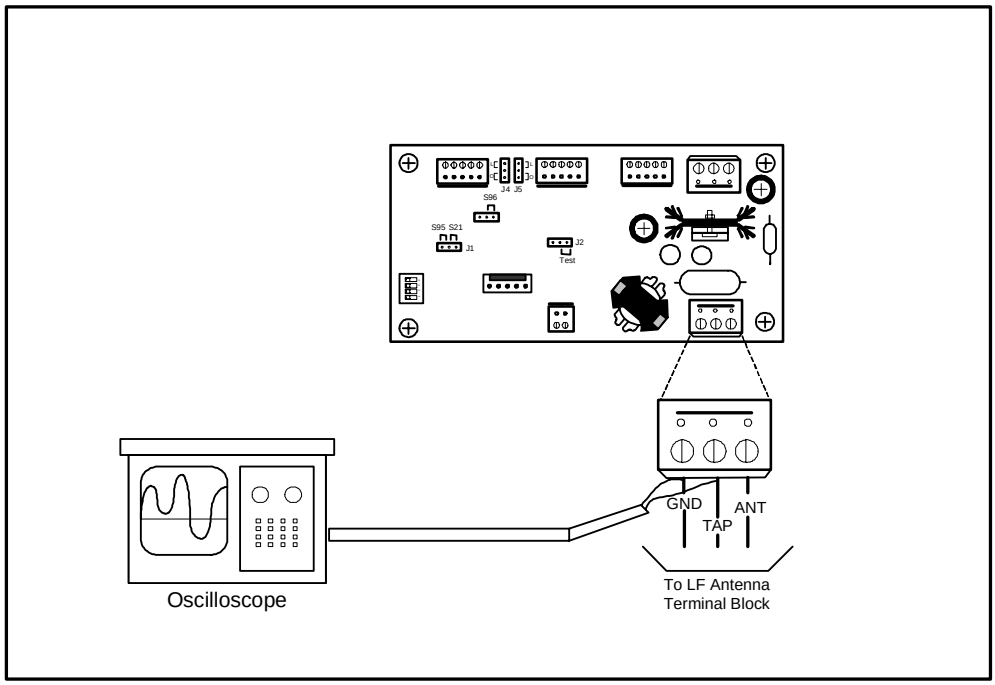


**Figure 5-4: LF Signal Measurement**

1. Connect the power to the Exciter. If there are additional Exciters connected to the same Reader, make sure that their power is off.

2. To ensure proper setup, send the following commands:

   :DISABLE:MS:EXCITER n<Enter>

   ROD=N<Enter>

   B<Enter>

3. Set the wanted TAP voltage to the value required by application (90V recommended for most cases):

   NVA=xx<Enter>,xx - is the value in Volts

4. Set the wanted `C9` threshold voltage to the value required by application (40V recommended for most cases):

   NVT=xx<Enter>,xx - is the value in Volts

5. To start the Exciter self calibration process send

   :CONFIG:EXCITER n<Enter>

   Wait about 30 seconds for the process to finish. If the returned error code is not 00, refer to RFID System S21 Reference Guide for the command operation and error codes description.

6. Check the auto-diagnostic feature, by typing:

   :DATA:PURGE<Enter>
   :TEST:EXCITER *n*<Enter>

   where *n* is the decimal address (1, 2, 3,...) of the Exciter that you want to test.

   The response should be `00,` meaning that the TAP voltage is higher than C9 threshold, and the Reader should contain in the buffer a message from the Test Tag.

7. Check the excitation field pattern by monitoring the **TAP** voltage with the Oscilloscope. Make sure that the TAP voltage is set to the correct value.

8. Turn off the excitation field, by typing:

   C<Enter>

   The **TAP** voltage amplitude should become zero.

9. Turn on the LF field again, by typing:

   B <Enter>

   The **TAP** voltage signal should have the same value and pattern as measured in Step 7.

10. Repeat Steps 1 to 9 (inclusive) for each Exciter that is connected to the Reader.

11. Power up all Exciters connected to the Reader.

**Note** When more than one Exciter EX21 is used to create a wider excitation zone, a magnetic coupling can appear. The phenomenon is explained in Chapter 4, *Setup Guidelines* in the *RFID System S21 Technical Guide.* The coupling generates an unwanted amplitude modulation with a frequency of several Hertz, the modulation depth depending directly on the coupling. The installer has to monitor the **TAP** signal and adjust the position of the EX21 frames to obtain a minimum unwanted modulation depth. To do that, the installer can increase the distance between frames, level the frames in the same plane, or place the frames with the shorter sides (1m) in parallel. As a general guideline, the minimum amplitude of $V_{TAP}$ due to unwanted modulation should be more than two thirds or 67% of the application required $V_{pp}$ value.

To check the Exciter's current settings including its serial number, do the following:

POWER:QUERY:EXCITER n<Enter>

ESN<Enter>

EVT<Enter> - returns the value of threshold in Volts

EVA<Enter> - returns the TAP signal value in Volts

**Note** The value of Group E parameters is valid only after a successful :POWER:QUERY:EXCITER command. Note that the default value of these parameters (after the Reader reset) is set to unrealistic value so that the user does not think that these are actual Exciter settings (refer to *RFID System S21 Reference Guide*).

In orger to set the Exciter TAP voltage, instead of using the :CONFIG:EXCITER n command as described above, the user can iteratively do the following:

NVX=some value<Enter>

POWER:MATCH:EXCITER n<Enter>

POWER:QUERY:EXCITER n<Enter>

EVA<Enter> - returns the TAPsignal value in Volts

The LF field strength in the Exciter is set by a digital potentiometer. The NVX parameter directly sets its wiper position. This position will result in a certain LF field strength specific to this particular Exciter. The actual field strength can then be checked by querying the EVA parameter. This procedure can be useful , for example, if the user wants to quickly set the Exciter to generate the maximum or minimum level of field.

## Configuring the Reader

The Reader's receiving configuration is controlled by the following group of parameters:

- Data buffering/reporting configuration - Group D parameters
- Hardware configuration - Group H parameters
- Instrument generic configuration - Group I parameters
- Tag data reading configuration - Group R parameters

For more information on these parameters, see the *RFID System S21 Reference Guide* and the *RFID System S21 Technical Guide*.

**Note** You can set these parameters for each particular application to optimize the functionality of the Reader and the RFID System.

## Setting Up the Carrier Threshold

**Warning** Before starting this procedure, you have to enable the auto-report mode for the reader and set the data report in ASCII format, by typing the following:

DAR=Y<Enter>

DHX=N<Enter>

To setup the Reader's carrier threshold, do the following:

1. Switch off the excitation field, by typing:

   C<Enter>

2. Set the Receiver's signal-to-noise ratio, by typing:

   RSS=10<Enter>

**Note** You can set other values for the RSS parameter. Lyngsoe recommends using a value between 10 and 20 for the RSS parameter.

3. If you are using Diversity, enable it by typing:

   HAD=Y<Enter>

   Ensure that both UHF antennas are connected. If you are not using Diversity, disable it by typing:

   HAD=N<Enter>

   Ensure that **only** the right UHF antenna is selected (see the HAS parameter).

4. Check the noise level on the UHF channel, by typing:

   HNL<Enter>

   The HNL value should be between -107 to -95dBm.

   If the HNL value is higher than -95dBm, check if there are unwanted transmissions on the UHF channel (433.9 MHz). Pay special attention to Transponders or Exciters in close proximity to the Reader; these can accidentally transmit data that can be received by the Reader.

   If the HNL value is lower than -105dBm, check its value without the UHF antennas attached. The difference between these two readings must be greater than 3dB.

5. Set the carrier threshold, by typing:

   S <Enter>

   or

   :CONFIG:THRESHOLD<Enter>

**Note** If the Reader resets itself, repeat the procedure from Step 1.

6. Monitor the DATA LED for at least 10 seconds. The LED must not flicker. If it does flicker occasionally, increment the RSS parameter value by one. Go to Step 5.

In installations where random interference is observed please contact Lyngsoe Systems A/S for assistance.

**IMPORTANT**

* For a normal setup, the sum of (HNL+RSS) must be less than - 85 dBm.

* If the noise level is higher than -95 dBm, disconnect the UHF antennas from the Reader, and check whether the HNL value drops below -107 dBm. If this occurs, it means that there is unwanted transmission on the UHF channel. To correct this situation, refer to Chapter 4, *Setup Guidelines* in the *RFID System S21 Technical Guide*.

7. Place your Test Transponder PT21 1-2 m away from an Exciter that is controlled by the Reader you are configuring. For more information about identification zones and the Test Transponders, refer to Chapter 4, *Setup Guidelines* in the *RFID System S21 Technical Guide*.

8. Start the excitation field, by typing:

   B<Enter>

9. Verify that the DATA LED is flickering, and check whether the Test Transponder's messages are displayed on the PC's screen.

   If data is not displayed, check the Reader's parameter configuration, and follow the troubleshooting instructions in Chapter 7, *Troubleshooting*.

   If the number of displayed messages is below n=IP+RC-2, check the carrier threshold and try to adjust it again (go to Step 1).

10. Remove the Test Transponder from the field and make sure that it is no longer transmitting by ensuring that the DATA LED is not flickering.

11. Set the DAR and DHX parameters to their original values. To store the settings, type

    :CONFIG:STORE<Enter>

## Setting Up the Exciter's Test-Tag

**Warning**

Before starting this procedure, you have to enable the auto-report mode for the reader and set the data report in ASCII format, by typing the following:

```
DAR=Y<Enter>
DHX=N<Enter>
```

To set up the Exciter's Test-Tag, do the following:

1. Set the parameters you want for the Test-Tag using the Group W parameters.

Example

For an IPC application, you have to program the following parameters, by typing:

```
WDR=4 <Enter>
WEC=Y <Enter>
WEN=N <Enter>
WHF=N <Enter>
WID=0 <Enter>
WIP=15 <Enter>
WLT=Y <Enter>
```

WRC=0 <Enter>
WRS=0 <Enter>
WSD=15 <Enter>
WSM=Y <Enter>
WTF=Y <Enter>
WTS=N <Enter>
WWP=Y <Enter>
WUD=$43FE*nnrrkk* <Enter>

where:
*nn* is the PC's address. If PC's address is 1, or there is only one PC/site, *nn*=01.
*rr* is the Reader's address. If Reader's address is 1, *rr* = 01.
*kk* is the Exciter's address. If the Exciter's address is 1, *kk* = 01.

2. Turn off the LF field, by typing:

   C<Enter>

3. Program the Exciter Test-Tag, by typing:

   :TAG:MATCH:EXCITER *k*<Enter>

   where *k* is the address of the Exciter you want to program.

   If the response is not `00`, the Exciter is not programmed. Repeat this command several times, waiting at least 3 seconds between retries.

**Note** If you cannot program the Test Tag, see Chapter 7, *Troubleshooting.*

4. Turn on the LF field, by typing:

   B<Enter>

5. Test the Exciter Test-Tag, by typing:

   :TEST:EXCITER *k*<Enter>

   where *k* is the address of the Exciter you want to test. The correct response is `00`, followed by a number of messages between IP-2 and IP. If less messages are received, verify whether the UHF channel is jammed or replace the LFA21 board.

**Note** If you do not see the expected number of messages on your PC, (13-15 messages for an IPC site), see Chapter 7, *Troubleshooting* and check the following parameters:

   DAR=Y; DCI=0, DRI=0

6. Repeat Steps 1 to 5 for each Exciter that is connected to the Reader.

## Setting Up the Real Time Clock

The Real Time Clock operation is controlled by the following commands/parameters: IUT, IUM, DTS. For more information on setting up the Real Time Clock, refer to the *RFID System S21 Reference Guide*. You can set the Reader's date and time by using the IUT parameter.

Example For an IPC application, you should set the IUT parameter to GMT time. To set it, type:

IUT=*YYMMDDhhmmss*Z<Enter>

where *YYMMDDhhmmss* is the year, month, day, hour, minute and second respectively.

Note: The parameter DTS must be set to “Y” in order for the reader to report time in seconds.

The parameter IUM must be set to “Y” in order for the Reader to generate and store a special message each time the RTC is set by the IUT command.

## Configuring Reader Motion Sensor Driven Mode of Operation

In this mode, the MS is connected to the Mother Board MBD21 as shown in Figure 5-5. One MS controlls all Exciters connected to the Reader.

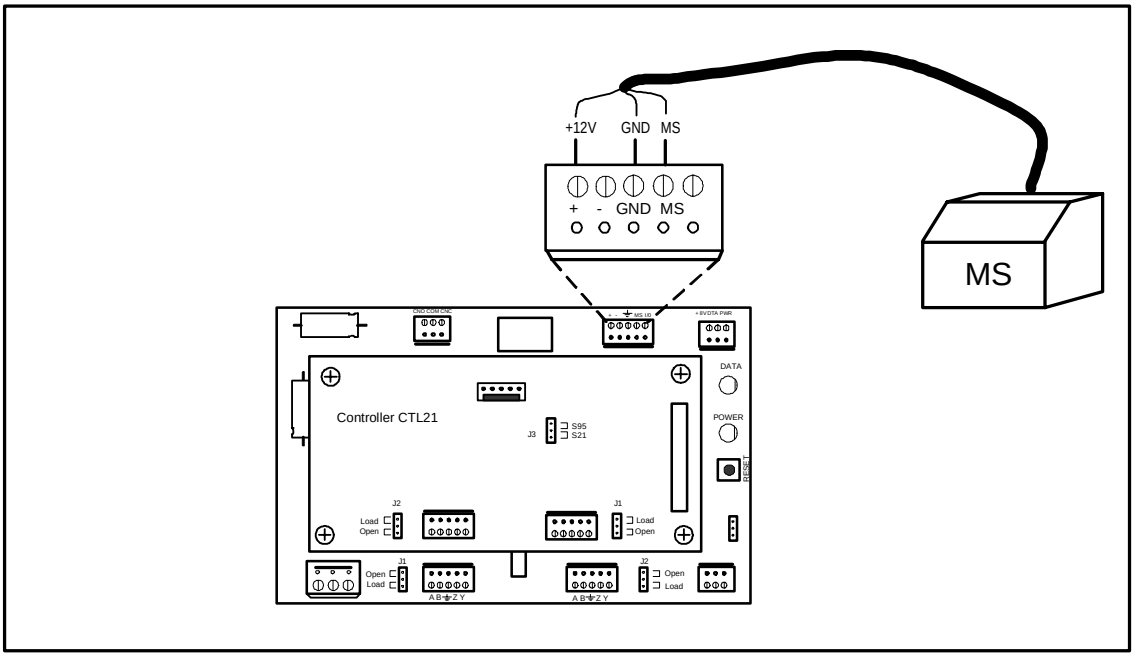


**Figure 5-5:** MS connection to the Reader MBD21.

The following parameters define the Reader MS Driven Mode of operation:

ROD, IOF, IOM, ROE, DNT, HMS, DIS, HOA, HOS.

For detailed explanations refer to the *RFID System S21 Reference Guide*.

Example ROD=Y<Enter> - enables MS Driven Mode;

IOF=Y<Enter> - LF field and data buffering is turned ON/OFF by MS;

IOM=Y<Enter> - special message is generated every time MS changes its status;

ROE=100<Enter> - after MS turns inactive, LF field and data buffering remain enabled for 5sec;

DNT=Y<Enter> - special message is generated if no tag is received before MS turns inactive;

HMS=24<Enter> - special message is generated if MS never turned active in 24hrs;

DIS=Y<Enter> - adds special field to the buffered message indicating MS status;

HOA=H<Enter> - MS is concidered active when OS line is at +5V;

HOS<Enter> - returns the current status of MS (High or Low).

## Configuring Exciter Motion Sensor Driven Mode of Operation

In this mode, each exciter is controlled individually by its own MS. One or two Motion Sensors can be connected to the Exciter LFA21. Figure 5-6 shows the connection of one MS. Similarly, the second MS can be connected to the MS2 input. When two MSs control one Exciter, either one of them can turn the LF field on.

**Note** Motion Sensor contacts must be normally closed when there is no motion. Unused MS input must be shorted to the Ground by means of wire in the connector.

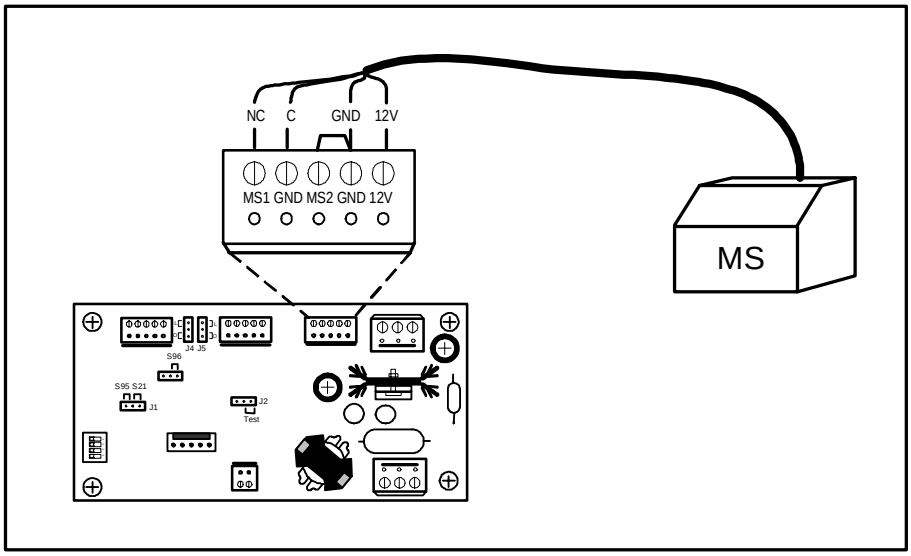


**Figure 5-6:** MS connection to the Exciter LFA21.

The following commands/parameters define the Exciter MS Driven Mode of operation:

:ENABLE:MS:EXCITER n, :DISABLE:MS:EXCITER n, :TEST:MS:EXCITER n, EMS.

For detailed explanations refer to the *RFID System S21 Reference Guide*.

**Note** There is a fixed extension time of 5sec when the LF field remains ON after MS becomes inactive.

To remotely test the MS functionality do the following:

Send the :TEST:MS:EXCITER n command. Wait for a period of time. Send the :TEST:MS:EXCITER n again. Check the value of the EMS parameter. This value indicates the number of times the MS turned active since the last time the :TEST:MS:EXCITER n command was sent. If you know that there was some activity around the gate but the EMS=0, this means that the MS is defective.

**Note** Execution of the :TEST:EXCITER n command is not affected by the motion sensor status. If MS is not active, the LF field is forced ON for a brief period of time enough to finish the self test procedure.

## Configuring the Reader's Application Parameters

You can configure the Reader's application parameters by setting the appropriate values for the parameters in the following groups:

- Data buffering/reporting configuration (D)
- Hardware configuration (H)
- Instrument generic configuration (I)
- Tag data reading/excitation configuration (R)
- Serial communication configuration (S)

For detailed explanations refer to the *RFID System S21 Reference Guide*.

Example

For example, for an IPC application, do the following:

1. Set the Flags reporting format to S95:

   DFA=N <Enter>

2. Enable the Gate ID filtration on the Reader, by typing:

   IFA=Y <Enter>

3. Set the data filtration on the Reader, by typing:

   DCI=10 <Enter>
   DRI=30 <Enter>

4. Set the reported data format as ANS.1 format, by typing:

   DHX=Y <Enter>

5. Set the Tag data character count, by typing:

   RCC=5 <Enter>

6. Use the default values for all the other parameters.

## Configuring the Reader's Network Parameters

To configure the Reader's network parameters, do the following:

1. Set the reporting mode, by typing:

   DAR=N<Enter>.

2. Set the Reader's address, by typing:

   IAD=*r*<Enter>

   where *r* is the Reader's address. The lowest value for this address is 1. For example, if there are 4 Readers in a network, they must be assigned the following addresses 1, 2, 3 and 4.

## Storing the Reader's Configuration

To store the Reader's configuration, do the following:

1. Store the Reader's parameters, by typing:

   :CONFIG:STORE<Enter>

2. Reset the Reader, by typing:

   :RESET<Enter>

**Note** The:CONFIG:STORE command stores the current Reader's configuration in the non-volatile memory.

The:RESET command updates the contents of the working memory from the non-volatile memory.

3. Check whether the Reader is operating properly, by typing:

   @*r* IVN<Enter>

   where *r* is the Reader's address. The Reader must respond with its software version number.

# Reader - Final Setup

1. Disconnect the PC from the Reader (See Figure 5-1 on page 5-2).

2. For network installations set jumper (P3) on the Motherboard MBD21 for “RS485” position. For more information on communication lines used by the Reader RD21, refer to Chapter 2, *Reader RD21 Installation and Connections*.

3. Verify the connections between the Reader and the rest of the equipment (shorts, loose connections, etc.)

4. Close the Reader’s enclosure.

# S21 RFID System - Final Test

**IMPORTANT**

* These tests must be done after all Readers and the Main PC are connected to the network according to the site documentation.

* The PC must be connected using an appropriate serial communication interface.

* To communicate with the Reader, either use a terminal emulation program, such as Hyper Terminal or Procomm in MS Windows applications, or the dedicated service module of the application software running on the Main PC.

* All commands to the Reader must include the address field **@r** where **r** is the Reader’s address (an integer followed by a blank).

You must repeat the following procedure for each Reader that is connected to the Main PC.

For the final test, do the following:

1. Verify that the Reader is communicating with the Main PC, by typing:

   @r IVN <Enter>

   where **r** is the Reader’s address. The Reader must respond with the software’s version number.

2. Set up the Carrier Threshold for the Reader as follows:

a) Switch on the excitation field, by typing:

   @r B <Enter>

b) Check the noise level, by typing:

   @*r* HNL<Enter>

   If there is no unwanted transmission on the UHF channel, the Reader must respond with a value lower than -95dBm for the HNL parameter. If not, refer to *Setting Up the Carrier Threshold* on page 5-10.

c) Check and record the value for the existing Reader’s Carrier Threshold level, by typing:

@*r* HTL<Enter>

The Reader should respond with the value for this parameter. For example, HTL=95.

d) If the HNL level measured in Step b) is lower than -95dBm, set the Reader's Carrier Threshold level again, by typing:

@*r* S<Enter>

or

@*r* :CONFIG:THRESHOLD<Enter>

The Carrier Threshold level setting is correct if the new HNL level displayed is smaller than or equal to the level displayed in Step c. If not, check for unwanted transmission on the UHF channel. You should also refer to Chapter 4, *Setup Guidelines* in the *RFID System S21 Technical Guide*.

3. Verify that an Exciter that is controlled by a Reader communicates with the Main PC:

a) Delete all Tag records from the Reader's buffer, by typing:

@*r* :DATA:PURGE<Enter>

b) Confirm that the Reader's buffer is empty, by typing:

@*r* D<Enter>

or

@*r* :DATA:REPORT<Enter>

The Reader must report a Null value.

**Note** For an IPC application, the data structure conforms to the ANS.1 standard. If the Reader's buffer is empty, the Reader sends a Null value of `$0500`. In ASCII format, the Null value is `{}`.

c) Switch on the LF field, by typing:

@*r* B<Enter>

d) Send a Test Exciter command, by typing:

@*r* :TEST:EXCITER k<Enter>

where r is the Reader's address and k is the Exciter's address. The correct Exciter's response is `00`.

e) Check the received messages, by typing:

@*r* D<Enter>

or

@*r* :DATA:REPORT<Enter>

The Reader must respond with the oldest record sent by the Exciter k's Test-Tag, in the format set by the DHX parameter. For more information on this parameter, refer to the *95 Series RFID System Reference Guide*.

For an IPC application, the Reader's Tag Record Buffer should contain 13-15 identical messages sent by the Exciter Test Tag in ANS.1 format. To read all messages, you have to repeat the commands:

@*r* D<Enter>
@*r* E<Enter>

until you get the Null value `$0500`.

f) Empty the Reader's Tag record buffer, by typing:

@*r* :DATA:PURGE<Enter>

g) Confirm that the Reader's buffer is empty, by typing:

@*r* :D<Enter> or @*r* :DATA:REPORT<Enter>

The Reader must report the Null value (`$0500`) in ANS.1 format.

4. Repeat Step 3 for all Exciters controlled by the Reader r.

5. Repeat Steps 1 to 4 for all Readers that are connected to the same PC.

# Chapter 6

## Programming and Testing the Transponder PT21

This chapter explains how to setup a programming site and gives the procedure for programming the Transponders PT21. This chapter does not, however, explain how to choose parameter values. Transmission parameters are defined and set in the programming software provided by Lyngsoe Systems A/S. For more information parameter configurations for the Transponder PT21, see the *RFID System 21 Reference Guide*.The PT21 Transponder is programmed using the Tag Qualifier TQ21.

## TQ21 - Tag Qualifier General Description

Tag Qualifier TQ21 can be used to test PT21/T96/T95 tags and to program tags PT21/T96. The TQ21 is part of the RFID System S21 developed and marketed by Lyngsoe Systems.
This Chapter gives you a short presentation of the equipment TQ21 and basic information of how to control it through its parameters.

A general overview of the commands and parameters used for TQ21 is presented in the Reference Guide for RFID System S21 (or S95).

## TQ21 Installation and Setup

To power up and interconnect the Tag Qualifier TQ21 with your computer see Figure 6-1 which presents a typical installation.

WARNING Before you start the installation, check if the Power Supply provides the specified output voltage - 12Vac or 14-16Vdc, and min. 0.3A; any polarity can be used for the dc output.

## PC Software Configuration

The simplest way to control TQ21 is by using a Terminal Emulation program on the PC. The general configuration procedure consists of:

- Open a Terminal Emulation program on your computer (Procomm, Hyper Terminal, etc.).
- Configure the computer's COM port to which the TQ21 is connected. The recommended PC configuration for the COM port is: COM port - COM1; Data rate - 19200 bps; Data bits - 8 bits; Parity - none; Stop bits - 1; Flow control - none.
- From the PC send commands to TQ21 and observe the responses on the PC.

Other dedicated software can be used to control TQ21 as long as the correct commands are provided for TQ21. Programming software can be purchased from Lyngsoe Systems A/S.

Setup the programming site, as shown in Figure 6.1:

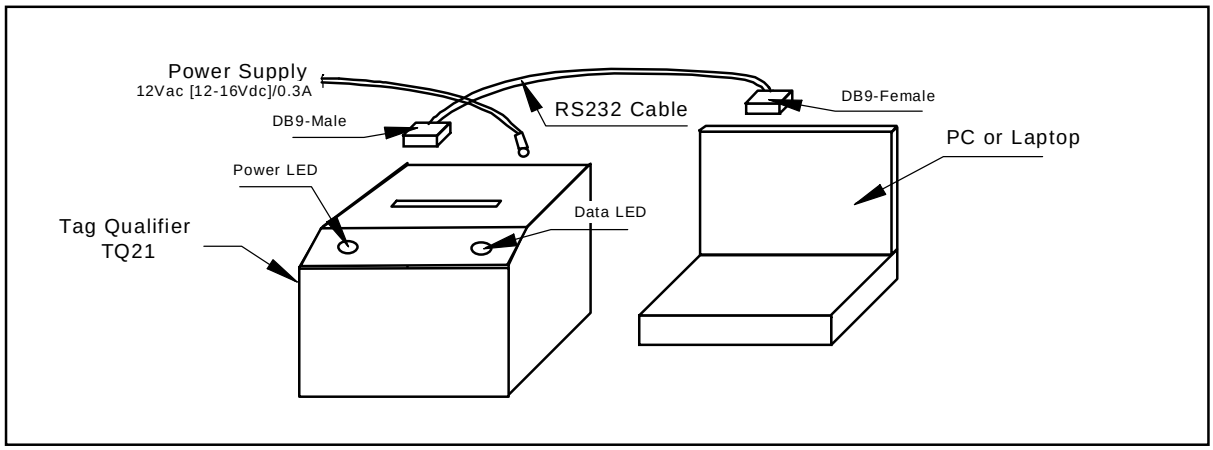


**Figure 1-7: P TQ21 Tag Qualifier Setup**

## TQ21 Connections

1. **Connect the RS232 cable.** Plug one end of the cable (DB9-Male) into the 9-pins connector on the TQ21 (marked as **RS232**). Plug the other end of the cable (DB9-Female) into the serial port (typical COM1) of your computer.

2. **Connect the power adapter.** Plug the power adapter output into the connector marked as **12Vac.**

3. **Turn on the TQ21** by connecting the power adapter into an available electrical outlet. The **POWER** LED goes ON, and the TQ21 performs a brief startup sequence, during which the **DATA** LED (red) stays ON continuously for 5-7 seconds. After finishing the startup sequence the **DATA** LED must turn OFF and the sign-on message `Tag Qualifier TQ21 (c)Copyright Lyngsoe Industries Ltd. 2001` will be displayed on the PC.

4. **TQ21 Sensitivity Threshold.** Set the carrier threshold of TQ21 by sending the command **S**, then save the setting by sending the commands**:CONFIG:STORE** and**:RESET**.

### IMPORTANT NOTE

- The **Power** LED lights to signalize that the power is connected to the TQ21.
- The **DATA** LED (red) lights continuously during the startup sequence and flashes when UHF signals are received.
- The TQ21 cannot be used for testing if the **Data** LED randomly flashes after the startup sequence is finished. In this case the sensitivity threshold must be set again and/or the source of unwanted transmission eliminated.

## Configuration

The functionality of the Tag Qualifier TQ21 can be configured by parameters. These parameters can be set from a PC connected through a standard serial interface RS232 to the TQ21. The parameters and commands supported by TQ21 are quite similar with those listed in the Reference Guide for System S21 with the following modifications.

## New parameters and commands

| | |
|---|---|
| Parameter: | DFA |
| Type: | Bit (Read/Write) |
| Range: | Y/N |
| Default value: | Y |
| Description: | Enable (Y) or disable (N) the transmission of the flags using S21/S96 format. When enabled, TQ21 transmits the received messages using the S21/S96 format for the flags field (including the ReceivedID information). If disabled, TQ21 transmits the received messages using S95 format for the flags field. |

| | |
|---|---|
| Parameter: | DFI |
| Type: | Bit (Read/Write) |
| Range: | Y/N |
| Default value: | Y |
| Description: | Enable (Y) or disable (N) the frequency measurement for the UHF received signal. When enabled, TQ21 transmits together with the received messages data about the carrier frequency and frequency deviation of the received UHF signal (CF and DF). If disabled, TQ21 transmits the received messages using the format defined by DFA parameter. |

## Parameters and commands disabled

Considering the S95 as a reference, the parameters PTA, PTT, PTV and RSM were disabled for TQ21.

## Firmware

For the command IVN, TQ21 will display its firmware version TQ21 v3.01.06. or a higher version.

# Hardware configuration parameters

Several parameters are used to set (configure) the hardware and must not be changed. If the TQ21's firmware is going to be updated, these parameters must be first written down and reprogrammed if were accidentally erased by the upgrading process.

These parameters are: HA0, HA1, HA2, HA3, HA4, HA5, HA6, HA7, HA8, HA9, HAA, HV0, HV1, ISC and ISN.

NOTE: Do not use the command:CONFIGURE:DEFAULT without saving first the values of all hardware parameters. This command will set all parameters to their default values, this way erasing the factory settings for the hardware parameters. If you erase by accident these hardware parameters, TQ21 loses its calibration (capability to measure carrier and deviation frequencies) and must be recalibrated again.

# Software configuration parameters

For an optimum operation of TQ21 we recommend the following setting: DFI=Y, DHX=N, DAR=Y, RCC=0, REC=Y.

# Operation

### General conditions

In order to minimize the measurement errors the following conditions must be met before you can start testing transponders:

- Power-up TQ21 for at least 15 minutes;
- Transponders to be kept at the room temperature (22 ±5 °C) for at least 2 hours.
- The Data LED to be steady Off (no flickering); see also sensitivity threshold, par.2.2.
- TQ21 to measure the "Reference Tags" with errors smaller than ±3 kHz.

### Testing Tags

Using TQ21 it's possible to test the following performances of a tag:

- Carrier frequency of the UHF transmission for modulation logic level "1". Field CF displays the difference in kHz between the measured carrier frequency and 433.800MHz.
- Dynamic frequency deviation of the UHF transmission. Field DF displays the difference in kHz between the measured carrier frequency for modulation logic "1" and logic "0".
- User data content; field UD.
- Number of transmitted messages. This number can be determined by counting the number of received messages following an excitation.
- Flags status. Field FG gives you information regarding the battery status and the type of excitation recognized by the tag.

Remember: To enable the frequency measurement function for the TQ21 parameter DFI must be set as DFI=Y and the command B must be active (LF excitation field enabled).

The recommended procedure for testing a tag is the following:

- Check if the tag to be tested (EUT) was outside an LF excitation field for at least 10 s before

testing, and the command C is active for TQ21 (LF excitation disabled).

- Place the EUT inside the slot marked "Postal Tag" on the TQ21, with the battery side first (battery to be at the bottom of the TQ21's slot).
- Send the command B.
- Check the content of the received messages on the PC. Dedicated software can be provided in order to automatically process this information and to give just the "Pass" or "Fail" mark.
- Send the command C.

Remember: Tag PT21 must be keep at least 10 s outside the LF excitation field before it can accept a new excitation.

## Programming Tags

TQ21 is capable of programming and querying tags PT21/T96.

The procedure of programming and querying is identical with the procedure used for tags T95 described in the User's Guide RFID S95. It includes the commands :TAG:MATCH (shortcut M), :TAG:CLONE and :TAG:QUERY (shortcut Q), setting the "wanted" parameters (group W) and querying the parameters (parameters from group T).

There are several particularities regarding the query/programming procedure.

- Tag PT21 must be kept at least 10 s outside the LF excitation field (command C active for at least 10 s) between two consecutive commands Q and/or M.
- Tag must be inside the TQ21's slot for the whole duration of the query or programming process; these processes are finished when the Data LED on the TQ21 stop flickering.

This page is intentionally left blank.

# Chapter 7

# Troubleshooting

This chapter describes maintenance and troubleshooting procedures that you must follow when using the RFID System 21. These procedures complete the troubleshooting information given in Chapter 5, *Configuration and Operation*, for the initial system installation and configuration.

## Preventive Maintenance

By using special commands, built-in Self Diagnostic circuits can check any part of the system and report an error code, if necessary. Depending on the error code received, the service technician will know the piece of hardware that is malfunctioning, and can immediately take corrective action to remedy the situation.

**All units have a warranty seal placed on their enclosures. Removal of this seal will void the warranty**.

## General Guidelines

Below is a list of some assumptions and guidelines:

1. The chapter assumes that repairs for any electronic assemblies are not made on site. Unless otherwise stated, if a specified condition cannot be met, the electronic assembly must replaced and returned to the manufacturer for repairs.

2. For a complete technical description of the RFID System S21, refer to the *RFID System S21 Technical Guide*. For a detailed description of the commands and parameters used to configure or to control the RFID System S21, refer to the *RFID System S21 Reference Guide*.

3. Information regarding the RFID System S21 configuration and operation is described in Chapter 5, *Configuration and Operation*.

4. The locations of the DATA LED, the POWER LED, and the RESET button are shown in Figure 5-1.

5. All the references to commands are made assuming that the Reader's address is **0**.

The following table describes several possible failures for the RFID System S21, and the troubleshooting steps to correct them.

| Problem | Symptom | Probable Cause | Solution |
|---|---|---|---|
| 1. No communication with a Reader. | 1.1. Reader does not respond to any command. | 1.1.1. Reader has an incorrect address. | 1. Check whether the Reader responds to commands using different addresses, by typing the following: @1 IVN<Enter>, @2 IVN<Enter>, @3 IVN<Enter>. When a correct address is sent, the Reader will respond with its version number.<br>2. If, by using a specific address, you are able to communicate with Reader, use this address or change the address to another value.<br>3. If after checking all possible addresses (up to 31), you still cannot communicate with the Reader, check Probable Cause 2. |
| | | 1.1.2. Faulty communication line between the Reader and PC. | 1. Open the Reader's enclosure and connect the PC directly to the Reader using the RS-232 communication line. See *Connecting the RS232 Communication Line* on page 2-2.<br>2. Switch off the Reader's power supply for at least 5 seconds, then perform the steps in the *Reader's Power-up Sequence* on page 5-4.<br>3. If the Reader performs the power-on test successfully, press the RESET button once. Check whether the DATA LED starts flashing at the rate of 2 Hz.<br>4. Press the RESET button again. Check whether the DATA LED stops flashing.<br>5. Check whether the Reader is responding to local commands by typing: @*r* IVN, and pressing <Enter>, where *r* is the Reader's address. The Reader must respond with its version number.<br>6. If you are able to communicate with the Reader from the local PC, check the integrity of the communication line between the Reader and the main PC.<br>7. After fixing the communication line's integrity, reconfigure the RFID System S21 and check whether the Reader can communicate with the PC.<br>8. If you cannot communicate with the Reader (Step 5), check Probable Cause 3. |

| Problem | Symptom | Probable Cause | Solution |
|---|---|---|---|
| | | 1.1.3. Mismatched serial communication parameters. | 1. Perform a power on reset. Wait until the Data LED goes off.<br>2. Push once the RESET button on the Motherboard. The DATA LED should start blinking indicating the “Learning Mode”.<br>3. Type several random characters on the PC keyboard. The Reader should recognize the serial communication parameters, match them and display them on screen, f.e. 19200, None, 8, 1.<br>4. Set the relevant Reader parameters accordingly (refer to the *RFID System S21 Reference Guide*).<br>5. Send :CONFIG:STORE.<br>6. Push the RESET button again to exit “Learning Mode”. |

| Problem | Symptom | Probable Cause | Solution |
|---|---|---|---|
| 2. Reader does not record the Transponder’s messages. | 2.1. After the power-on test is finished, the sign-on message is displayed on the PC, but the DATA LED is flashing continuously at a random rate. | 2.1.1. An improper carrier threshold was set, or there is an unwanted transmission on the UHF channel. | 1. Check whether the Reader is receiving information that is being transmitted from other Transponders in its vicinity. If you eliminate the unwanted transmission, the DATA LED will stop flickering.<br>2. Check whether an Exciter’s Test Tag is transmitting (faulty board). Switch off the power supply of all Exciters surrounding the Reader and monitor the DATA LED. If the DATA LED stops flickering, the unwanted transmission originated in one of the Exciters.<br>3. Run the procedure, *S21 RFID System - Final Test* on page 5-18. Step 2 - Set up the Carrier Threshold for the Reader.<br>4. If the Reader reports a channel noise level below -95dBm, but you are still not receiving the Transponders’ messages, check the noise level reported by the Reader with and without UHF antennas connected. If the noise level is identical or varies slightly (±1 dBm), replace the Reader.<br>5. If the Reader reports a noise level (HNL) above -95 dBm, there is unwanted transmission on the UHF channel from an external jammer. For procedures on eliminating the unwanted transmission, refer to Chapter 4, *Setup Guidelines* in the *RFID System S21 Technical Guide.* |

| Problem | Symptom | Probable Cause | Solution |
|---|---|---|---|
| | 2.2. After the power-on test is finished, the sign-on message is displayed on the PC, and the DATA LED is flashing **only** when a Transponder is activated. | 2.2.1. The configurations of the Transponder and the Reader do not match. | 1. Using a reference Transponder with known parameters, test the Reader's receiving capability.<br>2. If you can receive transmitted messages from the reference Tag, the tested Transponders are either not correctly configured for your application, or they are out of specifications. Reprogram the Transponders and check whether the Reader can receive messages.<br>3. If you cannot receive transmitted messages from the reference Transponder, the Reader has an incorrect configuration or out of specification. Go to Steps **4** and **5**.<br>4. Make sure that all parameters relevant to the application are set correctly.<br>5. Run the procedure, *S21 RFID System - Final Test* on page 5-18. Step 2 - Set up the Carrier Threshold for the Reader.<br>6. If still can not read the reference Transponder, replace the Reader. |

| Problem | Symptom | Probable Cause | Solution |
|---|---|---|---|
| | 2.3. After the power-on test is finished, the sign-on message is displayed on the PC, but the DATA LED is not flashing when a Transponder is activated. | 2.3.1. The carrier threshold value is too high. | 1. Check the ambient noise level (HNL parameter). The noise shoud not be higher than -95dBm. Type HNL several times to ensure that ambient noise does not change over time. If the noise is higher than -95dBm, it means that there is a jammer. In that case, go to Step 7.<br>2. Make sure that RSS value is in between 10 and 20 (may vary depending on application).<br>3. Run the procedure, *S21 RFID System - Final Test* on page 5-18. Step 2 - Set up the Carrier Threshold for the Reader.<br>4. Check the reception with a reference Transponder.<br>5. If not successful, check the noise level reported by the Reader with and without UHF antennas connected. If the noise level is identical or varies slightly (±1 dBm), replace the Reader.<br>6. If the Reader reports a channel noise level below -95dBm, but you are still not receiving the Transponders' messages, check the noise level reported by the Reader with and without UHF antennas connected. If the noise level is identical or varies slightly (±1 dBm), replace the Reader.<br>7. Investigate from where the unwanted transmission is coming. It could be Exciter Tag or some other Tags in close proximity or an external transmitter.<br>8. If the unwanted transmission is impossible to eliminate, refer to Chapter 4, *Setup Guidelines* in the *RFID System S21 Technical Guide*. |

| Problem | Symptom | Probable Cause | Solution |
|---|---|---|---|
| 3. Reader does not record all transmitted messages. | 3.1. Reader does not record all transmitted messages by the Transponder. | 3.1.1. The receiving zone is too small because of either a high carrier threshold, or there is random interference on the UHF channel. | 1. Run the procedure, *S21 RFID System - Final Test* on page 5-18. Step 2 - Set up the Carrier Threshold for the Reader.<br>2. If you observe a random variation of noise and interference on the UHF channel, either increase the value of the RSS parameter, or set the HTL parameter to a higher value than the one that was automatically set by the Reader.<br>3. If the receiving zone is too small after you set a higher carrier threshold, follow the setup guidelines recommended in Chapter 4, *Setup Guidelines* in the *RFID System S21 Technical Guide*.<br>**Note**<br>A UHF channel is subject to random noise and interference. The Reader disregards the messages with data errors. For an optimal channel, free of interference and industrial noise, the Reader must be able to receive all messages transmitted by a single Transponder placed in its reading range. When using multiple Transponders, some messages are lost due to the inherent collision between them. |
| 4. Time-out error. At the command :TEST:EXCITER k, the response is 00, but the Main PC does not receive a correct message from the Test Tag of the Exciter k after a predetermined period of time. | 4.1. DATA LED is flickering, the Reader's Tag Record Buffer contains messages from the Test Tag. | 4.1.1. User data in the Test tag was incorrectly programmed. | 1. Query the Test Tag programming parameters using :TAG:QUERY:EXCITER k.<br>2. Check the user data (TUD).<br>3. Correct the user data (WUD).<br>4. Reprogram the Test Tag using the command :TAG:MATCH:EXCITER k. |
| | 4.2. DATA LED is flickering, but the Reader's Tag Record Buffer is empty. | 4.2.1. Test tag was incorrectly programmed. | 1. Query the Test Tag programming parameters using :TAG:QUERY:EXCITER k.<br>2. Check the value of all group T parameters.<br>3. Correct the values using the group W parameters.<br>4. Reprogram the Test Tag using the command :TAG:MATCH:EXCITER k. |

| Problem | Symptom | Probable Cause | Solution |
|---|---|---|---|
| | 4.3. DATA LED is not flickering | 4.3.1. Exciter's Test Tag is placed beyond the limits of the receiving zone, or the noise level is too high, or the Test Tag is out of specifications. | 1. Run the procedure, *S21 RFID System - Final Test* on page 5-18. Step 2 - Set up the Carrier Threshold for the Reader.<br>2. Check the RF level of the messages received from the Test Tag; it must be higher than (RSS+HNL+3)dBm, that means 3dB above the carrier threshold value.<br>**Note**<br>The Reader reports the RF level of the received message only if the parameter DLI=Y.<br>3. If the RF level of the Test Tag's received messages is lower than -85dBm, either reposition the Reader or Exciter, or use a higher gain UHF antenna for the Reader. |
| 5. Excitation field generated by the Exciter is below Specifications. | 5.1. LF Transmitter Output is low. | 5.1.1. The LF antenna loop has a loose connection, or the LF antenna is detuned by a metallic object. | 1. Check whether the LF antenna wires are connected to the terminal block (See *LF Antenna Connections* on page 3-3).<br>2. Check the 3-wire connection between the LF antenna terminal block and the LFA21 assembly (terminal block TB2).<br>3. Check whether the recommended setup guidelines for the Exciter's location are met. Pay special attention to metallic surfaces surrounding the Exciter, short-circuit loops, and the spacing between adjacent Exciters. |
| 6. The Exciter responds with CA at the Self-Diagnostic Procedure. | 6.1. Exciter k responds with CA at the command: :TEST:EXCITER *k* sent by the Main PC (*k* is the Exciter's address). | 6.1.1. A faulty Exciter or a loose connection in the power cable or communication cable between the Reader and the Exciter. | 1. Check the power cable and the communication cable between the Reader and the Exciter.<br>2. Check the Exciter's address setting.<br>3. Check the LF Transmitter's output. (See *LF Antenna Connections* on page 3-3). |
| 7. The Exciter responds with C9 at the Self-Diagnostic Procedure. | 7.1. Exciter k responds with C9 at the command: :TEST:EXCITER *k* sent by the Main PC (*k* is the Exciter's address). | 7.1.1. A large magnetic coupling between 2 adjacent Exciter EX21 frames | 1. Check the Exciter's TAP voltage. (See *LF Transmitter Output* on page 5-8).<br>2. Reposition the EX21 frames to minimize the unwanted modulation.<br>3. Only if absolutely necessary, consider readjusting the C9 threshold (NVT). Refer to *LF Transmitter Output* on page 5-8 |

| Problem | Symptom | Probable Cause | Solution |
|---|---|---|---|
| | | 7.1.2. The LF antenna is detuned by metallic objects that are in close proximity. | 1. Check the Exciter's $V_{TAP}$.<br>2. Reposition the EX21 frames to minimize the detuning. If this is not practical, consider re-adjusting the antenna for a larger output or reduce the C9 threshold. Refer to *LF Transmitter Output* on page 5-8 |
| 8. The Reader does not communicate to the PC. | 8.1. No response from the Reader, intermittent response or garbled response. | 8.1.1. RS485 cable wires are damaged. | 1. Isolate the problem area by checking communication with other Readers located before or after on the RS485 bus.<br>2. Inspect the installation specifically looking for pulled out or damaged cables or bad contacts. |
| | | 8.1.2. Program in the Reader is not running due to internal failure. | 1. Get access to the Motherboard and see that Data LED is OFF.<br>2. Push RESET button once. Data LED should start blinking.<br>3. Push RESET button again. Data LED should go OFF. If this is not happening, the Reader program is not running properly and the Reader has to be replaced. |
| | | 8.1.3. RS485 interface in the Reader is damaged. | 1. Find all the Readers on the bus that are not communicating. Perform the following steps with each of them.<br>2. Disconnect RS485 bus terminal block/s from the Motherboard.<br>3. Locally connect Laptop to the Reader using RS485 Tester and Connecting Board CBD16 (refer to Figure 5-2 in Chapter 5).<br>4. Set the line termination jumper on the Motherboard to Load and RS485 Tester attenuation switch to ON. Check if you can communicate to the Reader using the correct address. If not successful, replace the Reader.<br>5. Reconnect the bus, place the termination jumper to its original position and move on to the next Reader.<br>6. Reapeat steps 2 through 5 until all Readers are checked. |

# Chapter 8

# Drawings

## Overview

This chapter contains drawings for the following:

- Lyngsoe Systems Reader RD21 (600002)
- Lyngsoe Systems Exciter EX21 (600003)
- Lyngsoe Systems TRM95 Power Supply (600579) & (600626)

Drawing 1

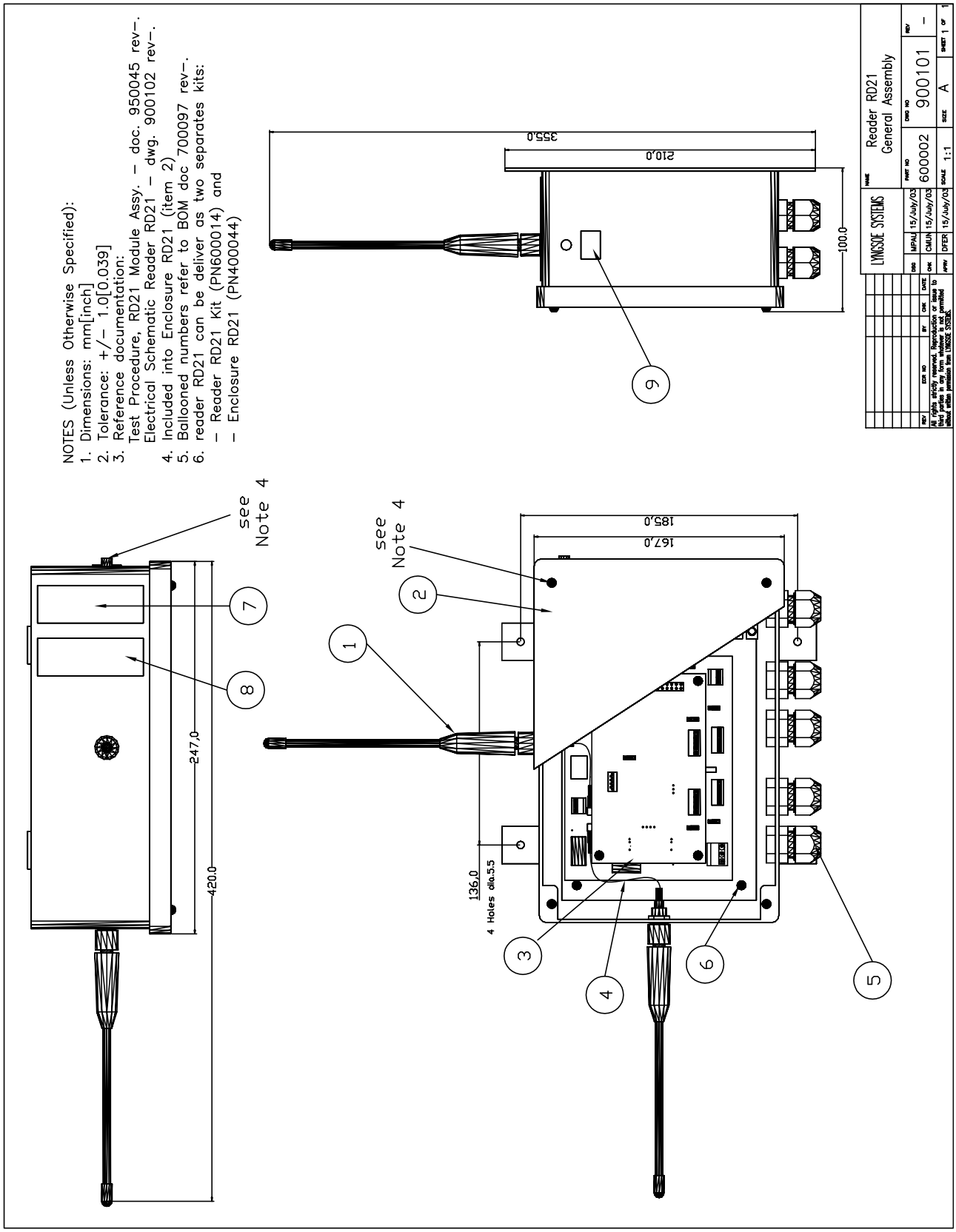
NOTES (Unless Otherwise Specified):
1. Dimensions: mm[inch]
2. Tolerance: +/- 1.0[0.039]
3. Reference documentation:
Test Procedure, RD21 Module Assy. - doc. 950045 rev-.
Electrical Schematic Reader RD21 - dwg. 900102 rev-.
4. Included into Enclosure RD21 (item 2)
5. Ballooned numbers refer to BOM doc 700097 rev-.
6. reader RD21 can be deliver as two separates kits:
- Reader RD21 Kit (PN600014) and
- Enclosure RD21 (PN400044)
see Note 4
see Note 4
247,0
420,0
185,0
167,0
136,0
4 Holes dia.5.5
355,0
210,0
100,0
LYNGSOE SYSTEMS
Reader RD21
General Assembly
600002
900101
A
1:1
1 OF 1

## *BOM - Reader RD21 Gen Assy (PN 600002)*

***Doc. 700097 Rev. -***

| Item | LI P/N | Description | Vendor | Vendor Type | Drawing | Qty |
|---|---|---|---|---|---|---|
| 1 | 350873 | UHF Antenna 434 MHz, λ/4, w/TNC Male Connector | Larsen | KD0004 | | 2 |
| 2 | 400044 | Enclosure Reader RD21 | LS | 400044 rev - | 900184 rev - | 1 |
| 3 | 500020 | Reader RD21 Module Assembly | LS | 500020 rev - | 900103 rev - | 1 |
| 4 | 500060 | RF Cable Assembly RD21 | Telegartner | 500060 rev - | 900286 rev - | 2 |
| 5 | 400604 | Cable Grip, PG11, Plastic, Gray | AmElec | 1555.11.10 | | 5 |
| 6 | 400561 | Screw Machine 6-32 x ¼" ST ZN PL PH PH DR | Spae-Naur | MS-197P | | 4 |
| 7 | 450049 | Label SN/Aprv, Reader RD21 | LS | 450049 rev - | 900191 rev - | 1 |
| 8 | 450050 | Label FCC, Reader RD21 | LS | 450050 rev - | 900192 rev - | 1 |
| 9 | 450052 | Label Power | LS | 450052 rev - | 900207 rev - | 1 |

Drawing 2.

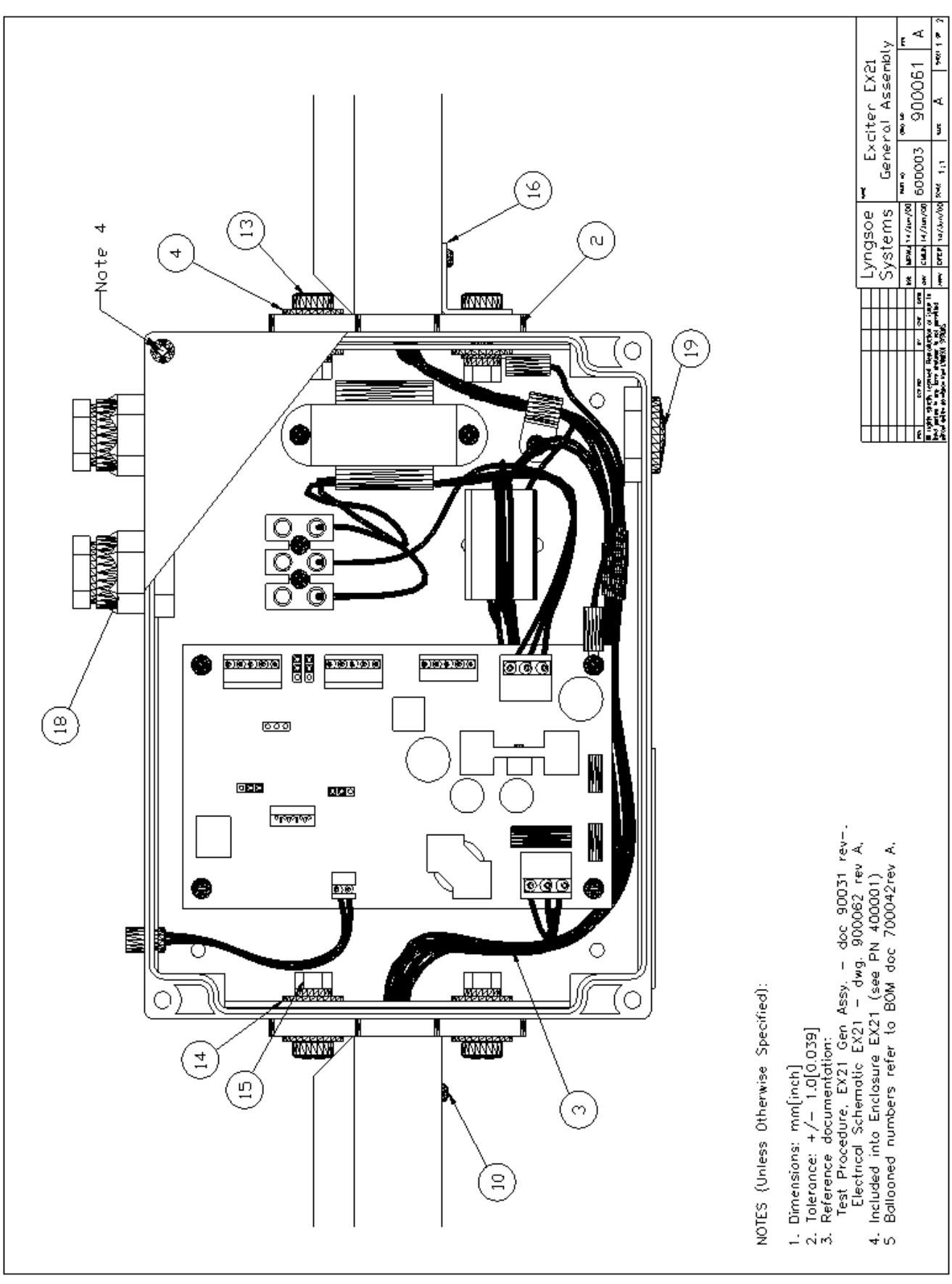
Note 4
4
13
16
2
19
18
14
15
3
10
Lyngsoe Systems
Exciter EX21
General Assembly
600003
900061
A
1:1
NOTES (Unless Otherwise Specified):
1. Dimensions: mm[inch]
2. Tolerance: +/- 1.0[0.039]
3. Reference documentation:
Test Procedure, EX21 Gen Assy. - doc 90031 rev-.
Electrical Schematic EX21 - dwg. 900062 rev A,
4. Included into Enclosure EX21 (see PN 400001)
5 Ballooned numbers refer to BOM doc 700042rev A.

Drawing 3.

***BOM - Exciter EX21 Gen Assy (PN 600003)***

***Doc. 700042 Rev. A***

| Item | LS PN | Part | Description | Vendor | Vendor Type | Note | Qty |
|---|---|---|---|---|---|---|---|
| 1 | 500010 | Subassy | PCB/Enclosure Exciter EX21 | LS | 500010 rev A | Dwg. 900061 rev A | 1 |
| 2 | 400596 | Mech Part | Base Connector with Hole | CPI | 400596 rev - | Dwg. 900248 rev - | 2 |
| 3 | 350324 | Hardware | Cable 7 Conductors, L=6.7m | EPM | 350324 rev - | Dwg. 900030 rev - | 1 |
| 4 | 400692 | Washer | M6, Flat, SS | Metrican | M6-51530 | | 3 |
| 5 | 400641 | Mech Part | 1" Sq. Single Flanged Tube, 0.37m | CPI | 400641 rev - | Dwg. 900251 rev - | 2 |
| 6 | 400682 | Mech Part | Two Way Corner with Hole | CPI | 400682 rev - | | 4 |
| 7 | 400640 | Mech Part | 1" Sq. Single Flanged Tube, 1.949m | CPI | 400640 rev - | Dwg. 900250 rev - | 2 |
| 8 | 400642 | Mech Part | 1" Sq. Single Flanged Tube, 0.949m | CPI | 400642 rev - | Dwg. 900252 rev - | 1 |
| 9 | 400644 | Mech Part | 1" Sq. Single Tube with Hole | CPI | 400644 rev - | Dwg. 900253 rev - | 4 |
| 10 | 400667 | Screw | M3.5x9.5, SelfDrill, Philips, PH, Steel/Zn | Metrican | 31250 ST3.5x9.5 | | 12 |
| 11 | 400648 | Mech Part | Robber Hose 3/4 OD, 0.3m | CPI | 400648 rev - | Dwg. 900255 rev - | 2 |
| 12 | 400647 | Mech Part | Robber Hose 3/4 OD, 1.88m | CPI | 400647 rev - | Dwg. 900254 rev - | 2 |
| 13 | 400664 | Screw | M6x20, Hexagon Head, SS | Metrican | 51010 M6x20 | | 4 |
| 14 | 400691 | Washer | M6, Serrated Lock, SS | Metrican | M6-51460 | | 4 |
| 15 | 400639 | Nut | M6, Hexagon, SS | Metrican | M6-51080 | | 4 |
| 16 | 400600 | Mech Part | Bracket 90 Degree | AMMach | 400600 rev A | Dwg. 900249 rev A | 1 |
| 17 | 400649 | Mech Part | Robber Hose 3/4 OD, 0.88m | CPI | 400649 rev - | Dwg. 900256 rev - | 1 |
| 18 | 400604 | Mech Part | Cable Grip, PG11, Plastic, Gray | AmElec | 155.11.10 | | 2 |
| 19 | 400617 | Mech Part | Hole Plug, PG11, Plastic Gray | AmElec | 8811 | | 1 |
| 20 | 400645 | Mech Part | Nut Polyamid, PG11, Gray | AmElec | 8211 | | 1 |

***Lyngsoe Systems Ltd*** ***16July03*** ***Page 1 / 1***

Drawing 4.

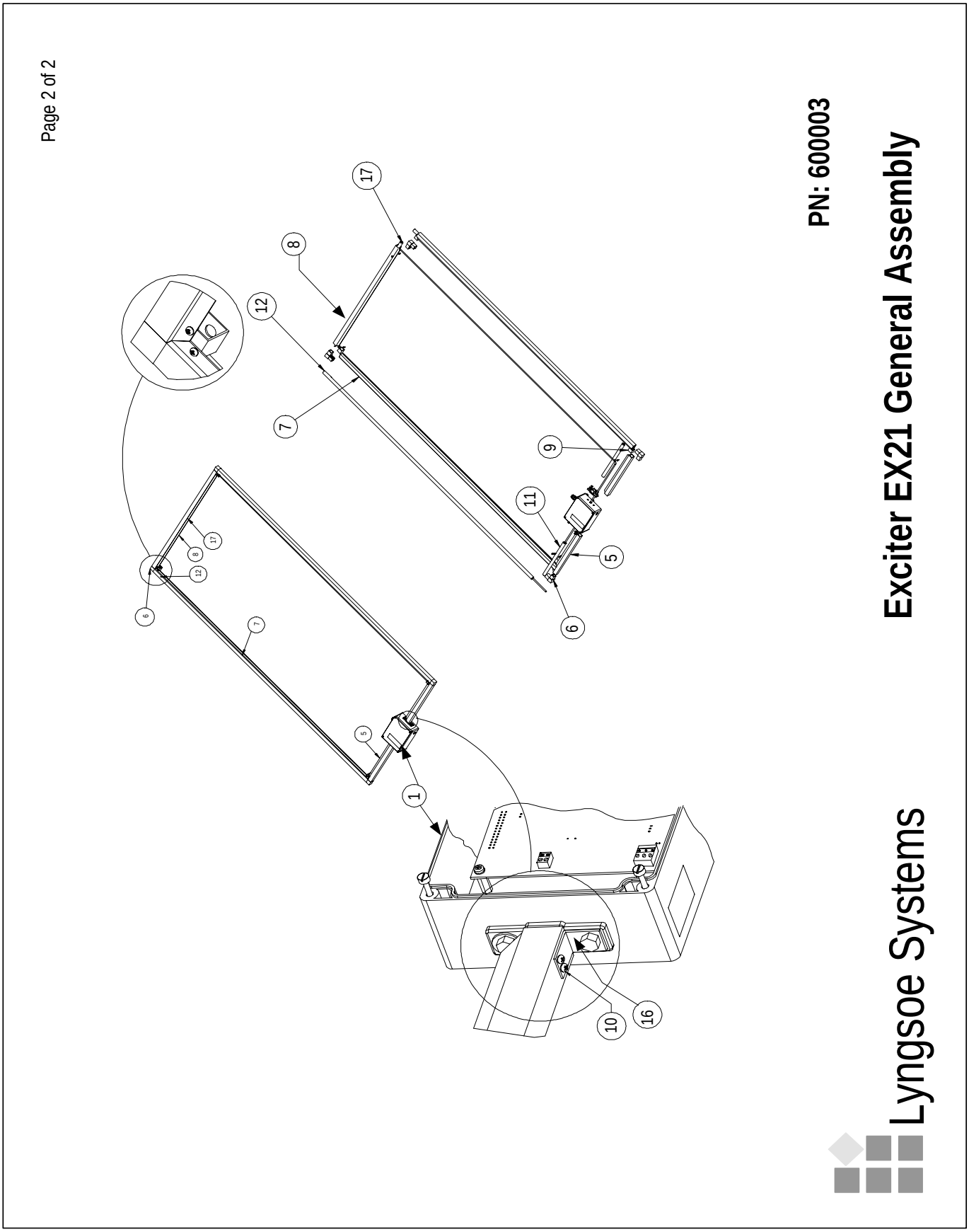
Page 2 of 2
PN: 600003
Exciter EX21 General Assembly
Lyngsoe Systems
1
5
6
7
8
9
10
11
12
16
17

Drawing 5.

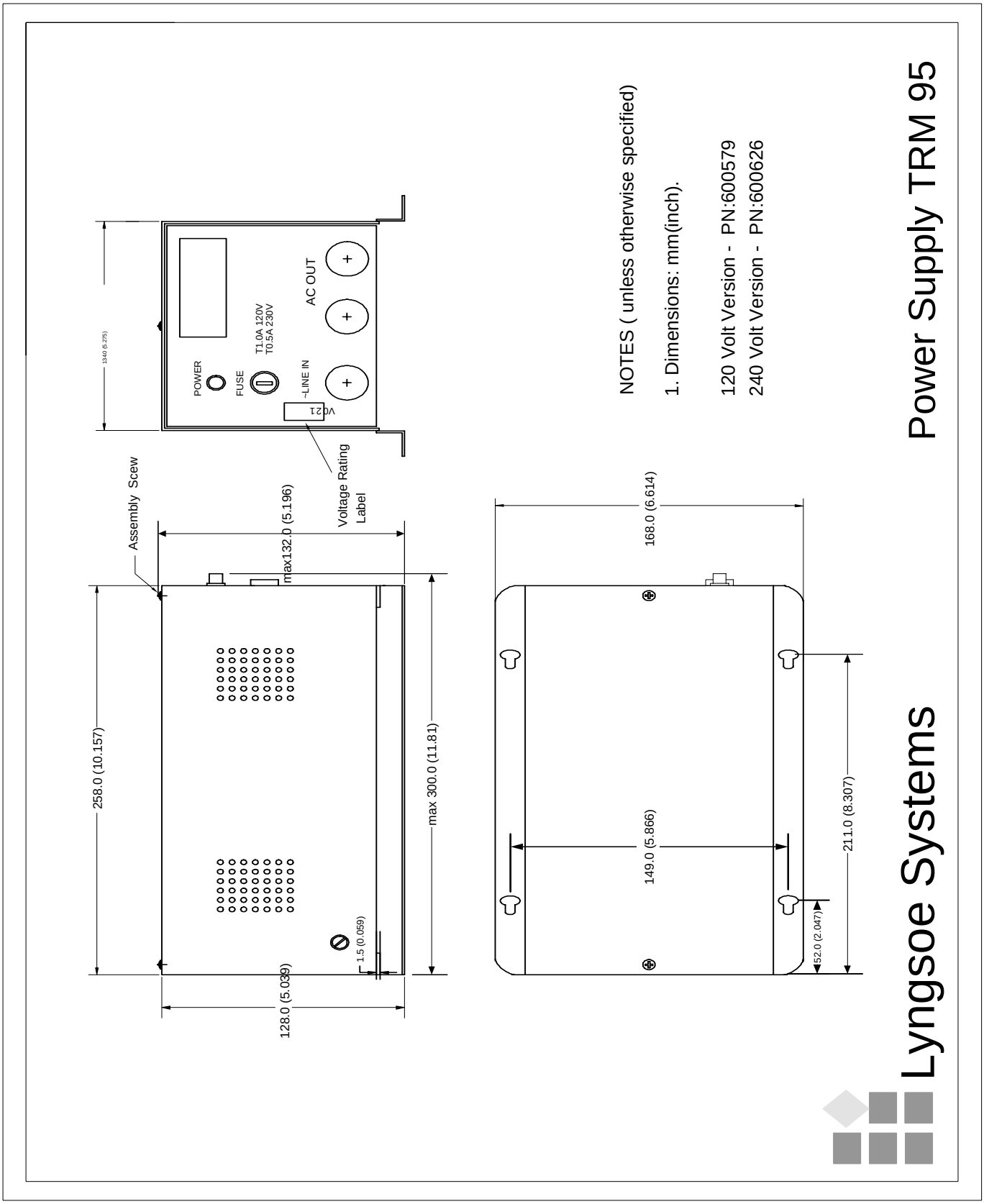
Power Supply TRM 95
Lyngsoe Systems
NOTES ( unless otherwise specified)
1. Dimensions: mm(inch).
120 Volt Version - PN:600579
240 Volt Version - PN:600626
POWER
FUSE
T1.0A 120V
T0.5A 230V
~LINE IN
AC OUT
V021
134.0 (5.275)
Voltage Rating Label
Assembly Scew
max132.0 (5.196)
258.0 (10.157)
max 300.0 (11.81)
128.0 (5.039)
1.5 (0.059)
168.0 (6.614)
149.0 (5.866)
211.0 (8.307)
52.0 (2.047)

This page is intentionally left blank.

# Appendix A

# Specifications

This appendix gives technical specifications for the Transponder PT21, the Reader RD21, the Exciter EX21, and the AC Source TRM95. It also gives information on system performances and special features.

## Transponder PT21

**LF Receiver**

- Configuration: Direct detection for 125.0 kHz signals modulated On/Off (OOK) with 1200bps.
- Minimum LF excitation duration: 150 ms.
- Receiver Selectivity @3dB:11 to 37 kHz.
- Sensitivity: better than H = 6mA/m.

**UHF Transmitter**

- Carrier Frequency, nominal: 433.92 MHz ±50 kHz, stabilized by a SAW resonator.
- Carrier Frequency, max. variation: ±75 kHz,due to temperature and aging
- Modulation Type: Frequency-Shift Keying (FSK).
- Total Frequency Deviation, nominal: 15 ±3 kHz.
- Total Frequency Deviation, max. variation: 6 to 40 kHz.
- Radiated Power (ERP): less than 10 µW.
- Data Rate: 19.2 or 38.4 kbps.

**Excitation Signal**

The Transponder is **only** awaken by signals accepted by the LF Receiver that have a duration of at least 150ms with a determined pattern of modulation.

**Programming**

- Mode: LF field.
- Data Rate: 1.2 kbps.
- Parameters: see the *RFID System S21 Reference Guide*.

**Writing and Transmitting Data**

Asynchronous, NRZ, using a specially developed protocol.

**Message Format**

For more information, see Appendix B, *Transponder PT21 Messages.*

**Power Supply**

3 V/150 mAh, lithium cell battery.

**Power Consumption**

Maximum 4 µA in sleep mode; 4mA in transmission mode.

| | |
|---|---|
| **Transponder Lifetime** | More than 5 years under normal use (1000 transmission/year). |
| **Environmental** | |
| Operation Temperature | - 20°C to +55°C. |
| Storage Temperature | - 40°C to +70°C. |
| Relative Humidity | Maximum 95%, non-condensing at +40°C |
| **Mechanical** | • Dimensions, max<br>Length: 143.0 mm<br>Width: 107 mm<br>Height: max. 2.8 mm<br>• Weight: max 12 g<br>• Survives at least 1000 times through the automatic mail sorting machine. |
| **Approvals** | Approved under I-ETS 300 220, I-ETS 300 330, RS-210 and FCC Part 15. |

## Reader RD21

| | |
|---|---|
| **Configuration** | Superheterodyne receiver for 433.92 MHz signals modulated FSK. |
| **Sensitivity** | Better than -105 dBm at 12 dB SINAD for 1 kHz modulation and 15 kHz total deviation. |
| **Successful Message Ratio (Throughput)** | Better than 98% for any of the following conditions:<br>• RF Input Signal (emf): -86 dBm to -10 dBm<br>• Frequency Range: 433.92 MHz ± 100 kHz.<br>• Total Frequency Deviation: 6 to 60 kHz.<br>• Data Rate: 19.2, or 38.4 kbps. |
| **Object Sensor Input** | • Voltage limits: -0.5 to 5.5V<br>• Current: max 50µA |
| **Relay Driving Capabilities** | • Max. Switching Current: 1A<br>• Max. Switched Voltage: 150Vdc or 300Vac<br>• Max. Switched Power: 30 W or 60 VA<br>• UL Rating: 1A @ 30Vdc<br>0.5A @ 120Vdc |

**Additional Features**

- RF antenna diversity.
- RF input signal level measurement. This information is attached to every received message.
- Programmable carrier threshold. Only input RF signals above this threshold are processed.
- Real time clock: a time stamp (Month/Day/Hour/Minute) can be added to every received message.
- Reads data with or without error checking and encryption in hexadecimal or ASCII format.
- Received messages can be filtrated by time, RF signal level, system code, and data content.
- Stores over 50 kbytes of received messages in an internal buffer.
- Interfaces with a PC through the RS-232 or RS-485 interface. The RS-485 can be configured for half-duplex (2 wires) or full-duplex (4 wires).
- Controls up to 15 Exciters EX21 through a dedicated RS-485 interface.
- Reader's firmware can be upgraded using the serial interface.

**Power Supply**

12Vac ±10%, 50/60 Hz, or 14.8 to 18.2 Vdc.

**Power Consumption**

Maximum 0.4 A ( Typical 0.3 A).

**Environmental**

Operation Temperature

- 20°C to +55°C.

Storage Temperature

- 40°C to +70°C.

Relative Humidity

Maximum 95%, non-condensing at +40°C.

**Mechanical**

- Dimensions (without UHF antennas)

  Length: 250 ± 5 mm
  Width: 210 ± 5 mm
  Height: 100 ± 5 mm

- Weight: max 4 kg

**Approvals**

Approved under I-ETS 300-220, I-ETS 300-330, RS-210 and FCC Part 15.

# Exciter EX21

**LF Transmitter**

- Carrier Frequency: 125.0 kHz, quartz crystal generated.
- Modulation type: On/Off Keying (OOK).
- Modulation Frequency: 1200bps.
- Carrier and modulation frequency tolerance: ± 50 ppm.
- Carrier and modulation frequency stability: better than 100 ppm over the temperature range.
- Carrier and modulation frequency aging: maximum 3 ppm/year.
- Maximum radiated E-field at 10 m: 109 dB µV/m +/-6 dB.

**Additional Features**

- Exciter EX21 incorporates a UHF transmitter that simulates the Transponder PT21 to check the Reader's capability.
- Test Transponder can be programmed and activated from the main PC.
- Self diagnostic for LF-Transmitter output level.
- Self diagnostic for power supply voltage level.
- Output relay driving
- Input Object Sensor

**Power Supply**

22 Vac ±10%, 50/60 Hz; or 25.2 - 30.8 Vdc.

**Power Consumption**

Maximum 0.5 A (Typical 0.3 A).

**Environmental**

| | |
|---|---|
| Operation Temperature | - 20°C to +55°C. |
| Storage Temperature | - 40°C to +70°C. |
| Relative Humidity | Maximum 95%, non-condensing at +40°C. |

**Mechanical**

- Dimensions

  Length: 2060 ± 10 mm
  Width: 1000 ± 10 mm
  Height: 75 ± 5 mm

- Weight: max 5.5 kg

**Approvals**

Approved under I-ETS 300 330, I-ETS 300 220, RSS-210 and FCC Part 15.

# Power Supply TRM95

**Input**

- AC line voltage: 120Vac - model TRM95/120V
  230Vac - model TRM95/230V
- Ratings: Model TRM95/120V - 0.7A, 60 Hz
  Model TRM95/230V - 0.35A, 50 Hz
- Voltage tolerance: ±10%
- Fusing: Type T (“Slo-Blo”), 5x20mm; 1A for TRM95/120V; 0.5A for TRM95/230V

**Output**

- Dual: 12 Vac/1A, 22Vac/2A
- Frequency: 50/60Hz
- Voltage tolerance: ±10%

**Environmental**

| | |
|---|---|
| Operation Temperature | - 30°C to +50°C. |
| Storage Temperature | - 40°C to +70°C. |
| Relative Humidity | Maximum 95%, non-condensing at +40°C. |

**Mechanical**

- Dimensions

  Length: 300 ± 5 mm
  Width: 168 ± 5 mm
  Height: 132 ± 5 mm

**Approvals** Approved under CSA, UL, and CE.

# System Performance

**Excitation Range** Larger than 4.0 m in open space conditions.

**Reading Range** Larger than 20.0 m in open space conditions.

**Identification Capability** Transponders can be identified (excited and recorded) when they are placed inside standard mail trays and bags, or collated on roller cages when they are moving through the RFID system at the normal operational speed (less than 5 m/s).

Readers can simultaneously identify up to 15 Transponders present in the excitation field. The level of accuracy is greater than 95%.

**System Capacity** Up to 31 Readers RD21 can be connected through the RS-485 interface to the main PC.

Up to 15 Exciters EX21 can be controlled by any Reader RD21. More Exciters EX21 can be used to generate a specific shape for the excitation gate.

**Self Testing Capabilities**

At the request of the main computer, the RFID System automatically reports the status of the LF excitation field generated by each Exciter EX21, and the receiving capability of each Reader RD21.

**Object Sensor Monitoring**

An external object sensor device can switch the excitation field On and Off.

**Driving Output**

A Single Pole Double Throw (SPDT) relay contact is available to drive external devices. The relay is activated each time the Reader receives a correct message.

# Appendix B

# Transponder PT21 Messages

## Message Format

Each message has the following format

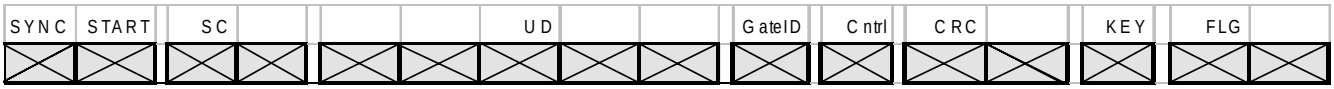


where:

| | |
|---|---|
| Prmbl | = 0.7 ms continue 1. |
| Sync | = a string of 10 bits of “0101010101”. |
| Start | = a string of 13 bits “0101010000111”. |
| SC | = 2 bytes system code; transmitted only if TS=Y. |
| UD | = user definable data; number of bytes is set by CC (1 to 32). |
| GateID | = 1 byte with received gate ID. |
| Cntrl | = 1 control byte. |
| CRC | = 2 bytes CRC; transmitted only if EC=Y. |
| Flag | = 2 bytes message flags; transmitted only if TF=Y. It has 1 byte if HF=N and 2 bytes if HF=Y. |
| Key | = 1 byte message key; transmitted only if EN=Y. |

### PT21 Parameters

The parameters that control the message transmission for PT21 are shown in the table below:

| Parameter | Range | Description |
|---|---|---|
| DR | 4 | Data rate; DR4= 38.4 kbps |
| EC | Y/N | Standard error check transmitted |
| EN | Y/N | Data encryption available |
| HF | Y/N | Flags in hexadecimal |
| ID | 0...200 | Initial delay |
| IP | 1...200 | Initial number of messages transmitted after a valid execution |
| LT | Y/N | Limit repeated transmissions |
| RC | 0...255 | Number of extra messages transmitted after IP during a continuous excitation |
| RS | 0...255 | Random seed |
| SD | 1...220 | Subsequent delay |
| TF | Y/N | Transmit Flags |
| TS | Y/N | Transmit System Code |

### Total Transmission Time

After a valid excitation, the PT21 transmits the initial number of messages defined by the IP parameter, followed by an extra number of messages (up to the RC) for as long as the excitation exists. Then it goes to sleep.

There is a random delay called *InterMsgDelay* that occurs between two consecutive messages. This is implemented to ensure that the delay time does not repeat itself before 32 messages have occurred.

The following is the method of evaluating the maximum transmission time for the PT21:

Number of bytes per message: TXBytes = SC + UD + GateID + Cntrl + CRC + Flag + Key

Number of bits per byte: BitsPerByte = 12 for DR4

Number of bits per message: TXBits = Sync + Start + BitsPerByte*TXBytes

Bit duration: BitLen = 1/38400

Message length: MsLen = 0.0007 +TXBit*BitLen

Intermessage constant: InterMsgUnit = (SC+UD+2+CRC+Key+Flag)*0.0003066, for DR4

Intermessage delay: InterMsgDelay = [SD +RND(0…31)]*InterMsgUnit;

(RND - random value)

Maximum number of transmitted messages: NM = IP +RC; if LT = Y

**Total transmission time: TXTime = NM (MsLen +(NM-1) (InterMsgDelay**)

The following tables present the maximum number of messages (NM) that can be transmitted in five seconds, using different sets of parameters for the PT21.

DR = 4 SM = Y TF = Y HF = N TS = N EC = Y CC = 5 EN = N

| RC+IP \ SD | 1 | 3 | 5 | 7 | 9 | 11 | 13 | 15 | 17 | 19 | 21 | 23 | 25 | 27 | 29 | 31 | 33 | 35 | 37 | 39 | 41 | 43 | 45 | 47 | 49 | 51 |
|---|---|---|---|---|---|---|---|---|---|---|---|---|---|---|---|---|---|---|---|---|---|---|---|---|---|---|
| 10 | 0.82 | 0.87 | 0.93 | 0.98 | 1.04 | 1.09 | 1.15 | 1.2 | 1.26 | 1.31 | 1.37 | 1.42 | 1.48 | 1.53 | 1.59 | 1.64 | 1.7 | 1.75 | 1.81 | 1.86 | 1.92 | 1.98 | 2.03 | 2.09 | 2.14 | 2.2 |
| 12 | 0.96 | 1.03 | 1.1 | 1.17 | 1.23 | 1.3 | 1.37 | 1.43 | 1.5 | 1.57 | 1.64 | 1.7 | 1.77 | 1.84 | 1.91 | 1.97 | 2.04 | 2.11 | 2.18 | 2.24 | 2.31 | 2.38 | 2.45 | 2.51 | 2.58 | 2.65 |
| 14 | 1.1 | 1.18 | 1.26 | 1.34 | 1.42 | 1.5 | 1.58 | 1.66 | 1.73 | 1.81 | 1.89 | 1.97 | 2.05 | 2.13 | 2.21 | 2.29 | 2.37 | 2.45 | 2.53 | 2.61 | 2.69 | 2.77 | 2.85 | 2.93 | 3.01 | 3.09 |
| 16 | 1.22 | 1.31 | 1.4 | 1.5 | 1.59 | 1.68 | 1.77 | 1.86 | 1.96 | 2.05 | 2.14 | 2.23 | 2.32 | 2.42 | 2.51 | 2.6 | 2.69 | 2.78 | 2.87 | 2.97 | 3.06 | 3.15 | 3.24 | 3.33 | 3.43 | 3.52 |
| 18 | 1.33 | 1.43 | 1.54 | 1.64 | 1.75 | 1.85 | 1.95 | 2.06 | 2.16 | 2.27 | 2.37 | 2.48 | 2.58 | 2.68 | 2.79 | 2.89 | 3 | 3.1 | 3.21 | 3.31 | 3.41 | 3.52 | 3.62 | 3.73 | 3.83 | 3.94 |
| 20 | 1.43 | 1.54 | 1.66 | 1.78 | 1.89 | 2.01 | 2.13 | 2.24 | 2.36 | 2.48 | 2.59 | 2.71 | 2.82 | 2.94 | 3.06 | 3.17 | 3.29 | 3.41 | 3.52 | 3.64 | 3.76 | 3.87 | 3.99 | 4.11 | 4.22 | 4.34 |
| 22 | 1.51 | 1.64 | 1.77 | 1.9 | 2.03 | 2.16 | 2.28 | 2.41 | 2.54 | 2.67 | 2.8 | 2.93 | 3.06 | 3.19 | 3.31 | 3.44 | 3.57 | 3.7 | 3.83 | 3.96 | 4.09 | 4.22 | 4.35 | 4.47 | 4.6 | 4.73 |
| 24 | 1.59 | 1.73 | 1.87 | 2.01 | 2.15 | 2.29 | 2.43 | 2.57 | 2.71 | 2.85 | 3 | 3.14 | 3.28 | 3.42 | 3.56 | 3.7 | 3.84 | 3.98 | 4.12 | 4.26 | 4.41 | 4.55 | 4.69 | 4.83 | 4.97 | 5.11 |
| 26 | 1.65 | 1.8 | 1.95 | 2.11 | 2.26 | 2.41 | 2.57 | 2.72 | 2.87 | 3.03 | 3.18 | 3.33 | 3.49 | 3.64 | 3.79 | 3.95 | 4.1 | 4.25 | 4.41 | 4.56 | 4.71 | 4.87 | 5.02 | 5.17 | 5.33 | 5.48 |
| 28 | 1.69 | 1.86 | 2.03 | 2.19 | 2.36 | 2.52 | 2.69 | 2.85 | 3.02 | 3.18 | 3.35 | 3.52 | 3.68 | 3.85 | 4.01 | 4.18 | 4.34 | 4.51 | 4.67 | 4.84 | 5.01 | 5.17 | 5.34 | 5.5 | 5.67 | 5.83 |
| 30 | 1.73 | 1.91 | 2.09 | 2.26 | 2.44 | 2.62 | 2.8 | 2.98 | 3.15 | 3.33 | 3.51 | 3.69 | 3.86 | 4.04 | 4.22 | 4.4 | 4.58 | 4.75 | 4.93 | 5.11 | 5.29 | 5.47 | 5.64 | 5.82 | 6 | 6.18 |
| 32 | 1.65 | 1.84 | 2.02 | 2.21 | 2.39 | 2.57 | 2.76 | 2.94 | 3.13 | 3.31 | 3.49 | 3.68 | 3.86 | 4.05 | 4.23 | 4.41 | 4.6 | 4.78 | 4.96 | 5.15 | 5.33 | 5.52 | 5.7 | 5.88 | 6.07 | 6.25 |
| 34 | 1.86 | 2.06 | 2.25 | 2.45 | 2.65 | 2.84 | 3.04 | 3.24 | 3.43 | 3.63 | 3.82 | 4.02 | 4.22 | 4.41 | 4.61 | 4.81 | 5 | 5.2 | 5.39 | 5.59 | 5.79 | 5.98 | 6.18 | 6.37 | 6.57 | 6.77 |
| 36 | 2.06 | 2.27 | 2.47 | 2.68 | 2.89 | 3.1 | 3.31 | 3.52 | 3.73 | 3.93 | 4.14 | 4.35 | 4.56 | 4.77 | 4.98 | 5.18 | 5.39 | 5.6 | 5.81 | 6.02 | 6.23 | 6.44 | 6.64 | 6.85 | 7.06 | 7.27 |
| 38 | 2.24 | 2.46 | 2.68 | 2.9 | 3.12 | 3.34 | 3.57 | 3.79 | 4.01 | 4.23 | 4.45 | 4.67 | 4.89 | 5.11 | 5.33 | 5.55 | 5.77 | 5.99 | 6.21 | 6.44 | 6.66 | 6.88 | 7.1 | 7.32 | 7.54 | 7.76 |
| 40 | 2.41 | 2.65 | 2.88 | 3.11 | 3.34 | 3.58 | 3.81 | 4.04 | 4.28 | 4.51 | 4.74 | 4.98 | 5.21 | 5.44 | 5.67 | 5.91 | 6.14 | 6.37 | 6.61 | 6.84 | 7.07 | 7.31 | 7.54 | 7.77 | 8 | 8.24 |
| 42 | 2.57 | 2.82 | 3.06 | 3.31 | 3.55 | 3.8 | 4.04 | 4.29 | 4.53 | 4.78 | 5.02 | 5.27 | 5.51 | 5.76 | 6 | 6.25 | 6.5 | 6.74 | 6.99 | 7.23 | 7.48 | 7.72 | 7.97 | 8.21 | 8.46 | 8.7 |
| 44 | 2.72 | 2.98 | 3.23 | 3.49 | 3.75 | 4.01 | 4.26 | 4.52 | 4.78 | 5.04 | 5.29 | 5.55 | 5.81 | 6.07 | 6.32 | 6.58 | 6.84 | 7.1 | 7.35 | 7.61 | 7.87 | 8.13 | 8.38 | 8.64 | 8.9 | 9.16 |
| 46 | 2.85 | 3.12 | 3.39 | 3.66 | 3.93 | 4.2 | 4.47 | 4.74 | 5.01 | 5.28 | 5.55 | 5.82 | 6.09 | 6.36 | 6.63 | 6.9 | 7.17 | 7.44 | 7.71 | 7.98 | 8.25 | 8.52 | 8.79 | 9.06 | 9.33 | 9.6 |
| 48 | 2.97 | 3.26 | 3.54 | 3.82 | 4.1 | 4.38 | 4.67 | 4.95 | 5.23 | 5.51 | 5.79 | 6.08 | 6.36 | 6.64 | 6.92 | 7.21 | 7.49 | 7.77 | 8.05 | 8.33 | 8.62 | 8.9 | 9.18 | 9.46 | 9.74 | 10 |
| 50 | 3.08 | 3.38 | 3.67 | 3.97 | 4.26 | 4.56 | 4.85 | 5.14 | 5.44 | 5.73 | 6.03 | 6.32 | 6.62 | 6.91 | 7.2 | 7.5 | 7.79 | 8.09 | 8.38 | 8.68 | 8.97 | 9.27 | 9.56 | 9.85 | 10.1 | 10.4 |
| 55 | 3.31 | 3.63 | 3.96 | 4.28 | 4.61 | 4.93 | 5.25 | 5.58 | 5.9 | 6.23 | 6.55 | 6.88 | 7.2 | 7.53 | 7.85 | 8.18 | 8.5 | 8.83 | 9.15 | 9.48 | 9.8 | 10.1 | 10.5 | 10.8 | 11.1 | 11.4 |
| 60 | 3.45 | 3.81 | 4.16 | 4.52 | 4.87 | 5.23 | 5.58 | 5.94 | 6.29 | 6.65 | 7.01 | 7.36 | 7.72 | 8.07 | 8.43 | 8.78 | 9.14 | 9.5 | 9.85 | 10.2 | 10.6 | 10.9 | 11.3 | 11.6 | 12 | 12.3 |
| 65 | 3.51 | 3.89 | 4.27 | 4.65 | 5.03 | 5.41 | 5.8 | 6.18 | 6.56 | 6.94 | 7.32 | 7.7 | 8.08 | 8.46 | 8.84 | 9.22 | 9.6 | 9.98 | 10.4 | 10.7 | 11.1 | 11.5 | 11.9 | 12.3 | 12.6 | 13 |
| 70 | 4 | 4.41 | 4.82 | 5.23 | 5.64 | 6.05 | 6.46 | 6.87 | 7.28 | 7.69 | 8.1 | 8.51 | 8.93 | 9.34 | 9.75 | 10.2 | 10.6 | 11 | 11.4 | 11.8 | 12.2 | 12.6 | 13 | 13.4 | 13.9 | 14.3 |
| 75 | 4.4 | 4.84 | 5.28 | 5.73 | 6.17 | 6.61 | 7.05 | 7.49 | 7.93 | 8.37 | 8.82 | 9.26 | 9.7 | 10.1 | 10.6 | 11 | 11.5 | 11.9 | 12.3 | 12.8 | 13.2 | 13.7 | 14.1 | 14.6 | 15 | 15.4 |
| 80 | 4.73 | 5.2 | 5.67 | 6.15 | 6.62 | 7.09 | 7.56 | 8.03 | 8.51 | 8.98 | 9.45 | 9.92 | 10.4 | 10.9 | 11.3 | 11.8 | 12.3 | 12.8 | 13.2 | 13.7 | 14.2 | 14.6 | 15.1 | 15.6 | 16.1 | 16.5 |
| 85 | 4.98 | 5.48 | 5.99 | 6.49 | 6.99 | 7.49 | 8 | 8.5 | 9 | 9.51 | 10 | 10.5 | 11 | 11.5 | 12 | 12.5 | 13 | 13.5 | 14 | 14.5 | 15 | 15.5 | 16 | 16.5 | 17 | 17.6 |
| 90 | 5.16 | 5.69 | 6.22 | 6.76 | 7.29 | 7.82 | 8.36 | 8.89 | 9.42 | 9.96 | 10.5 | 11 | 11.6 | 12.1 | 12.6 | 13.2 | 13.7 | 14.2 | 14.8 | 15.3 | 15.8 | 16.4 | 16.9 | 17.4 | 18 | 18.5 |
| 95 | 5.25 | 5.82 | 6.38 | 6.95 | 7.51 | 8.07 | 8.64 | 9.2 | 9.77 | 10.3 | 10.9 | 11.5 | 12 | 12.6 | 13.2 | 13.7 | 14.3 | 14.8 | 15.4 | 16 | 16.5 | 17.1 | 17.7 | 18.2 | 18.8 | 19.4 |
| 100 | 5.57 | 6.16 | 6.74 | 7.33 | 7.92 | 8.51 | 9.1 | 9.69 | 10.3 | 10.9 | 11.5 | 12 | 12.6 | 13.2 | 13.8 | 14.4 | 15 | 15.6 | 16.2 | 16.8 | 17.3 | 17.9 | 18.5 | 19.1 | 19.7 | 20.3 |
| 105 | 6 | 6.62 | 7.24 | 7.86 | 8.48 | 9.1 | 9.72 | 10.3 | 11 | 11.6 | 12.2 | 12.8 | 13.4 | 14.1 | 14.7 | 15.3 | 15.9 | 16.5 | 17.2 | 17.8 | 18.4 | 19 | 19.6 | 20.2 | 20.9 | 21.5 |
| 110 | 6.36 | 7.01 | 7.66 | 8.31 | 8.96 | 9.61 | 10.3 | 10.9 | 11.6 | 12.2 | 12.9 | 13.5 | 14.2 | 14.8 | 15.5 | 16.1 | 16.8 | 17.4 | 18.1 | 18.7 | 19.4 | 20 | 20.7 | 21.3 | 22 | 22.6 |
| 115 | 6.64 | 7.32 | 8.01 | 8.69 | 9.37 | 10 | 10.7 | 11.4 | 12.1 | 12.8 | 13.5 | 14.1 | 14.8 | 15.5 | 16.2 | 16.9 | 17.5 | 18.2 | 18.9 | 19.6 | 20.3 | 20.9 | 21.6 | 22.3 | 23 | 23.7 |
| 120 | 6.85 | 7.56 | 8.27 | 8.98 | 9.69 | 10.4 | 11.1 | 11.8 | 12.5 | 13.3 | 14 | 14.7 | 15.4 | 16.1 | 16.8 | 17.5 | 18.2 | 18.9 | 19.7 | 20.4 | 21.1 | 21.8 | 22.5 | 23.2 | 23.9 | 24.6 |
| 125 | 6.98 | 7.72 | 8.46 | 9.2 | 9.95 | 10.7 | 11.4 | 12.2 | 12.9 | 13.7 | 14.4 | 15.1 | 15.9 | 16.6 | 17.4 | 18.1 | 18.9 | 19.6 | 20.3 | 21.1 | 21.8 | 22.6 | 23.3 | 24 | 24.8 | 25.5 |

Transmission Time, sec

**DR= 4** TF = Y, HF = N, TS = N, EC = Y, EN = N

| CC \ SD | 1 | 3 | 5 | 7 | 9 | 11 | 13 | 15 | 17 | 19 | 21 | 23 | 25 | 27 | 29 | 31 | 33 | 35 | 37 | 39 | 41 | 43 | 45 | 47 | 49 | 51 | 53 | 55 | 57 | 59 | 61 | 63 | 65 | 67 | 69 | 71 |
|---|---|---|---|---|---|---|---|---|---|---|---|---|---|---|---|---|---|---|---|---|---|---|---|---|---|---|---|---|---|---|---|---|---|---|---|---|
| 1 | 143 | 133 | 118 | 109 | 102 | 97 | 88 | 82 | 77 | 74 | 71 | 68 | 66 | 62 | 58 | 55 | 53 | 51 | 49 | 47 | 46 | 44 | 43 | 42 | 41 | 40 | 39 | 38 | 37 | 36 | 35 | 35 | 34 | 33 | 33 | 31 |
| 2 | 129 | 110 | 103 | 97 | 86 | 80 | 75 | 71 | 68 | 66 | 61 | 57 | 54 | 51 | 49 | 47 | 45 | 44 | 42 | 41 | 40 | 39 | 38 | 37 | 36 | 35 | 34 | 33 | 33 | 31 | 30 | 29 | 28 | 27 | 27 | 26 |
| 3 | 107 | 100 | 89 | 80 | 75 | 71 | 68 | 65 | 59 | 54 | 51 | 49 | 47 | 45 | 43 | 41 | 40 | 39 | 38 | 37 | 36 | 35 | 34 | 33 | 31 | 30 | 29 | 28 | 27 | 26 | 25 | 25 | 24 | 24 | 23 | 22 |
| 4 | 99 | 86 | 78 | 73 | 69 | 65 | 59 | 54 | 51 | 48 | 45 | 43 | 42 | 40 | 39 | 37 | 36 | 35 | 34 | 33 | 31 | 30 | 29 | 28 | 27 | 26 | 25 | 24 | 24 | 23 | 22 | 22 | 21 | 21 | 20 | 20 |
| 5 | 85 | 76 | 71 | 67 | 62 | 55 | 51 | 48 | 45 | 43 | 41 | 40 | 38 | 37 | 36 | 35 | 33 | 33 | 30 | 29 | 27 | 26 | 25 | 24 | 24 | 23 | 22 | 22 | 21 | 20 | 20 | 19 | 19 | 18 | 18 | 18 |
| 6 | 77 | 71 | 67 | 60 | 54 | 49 | 46 | 44 | 42 | 40 | 38 | 37 | 35 | 34 | 33 | 31 | 29 | 28 | 27 | 25 | 24 | 23 | 23 | 22 | 21 | 21 | 20 | 19 | 19 | 18 | 18 | 17 | 17 | 17 | 16 | 16 |
| 7 | 72 | 67 | 60 | 53 | 48 | 45 | 43 | 41 | 39 | 37 | 36 | 34 | 33 | 31 | 29 | 27 | 26 | 25 | 24 | 23 | 22 | 21 | 21 | 20 | 19 | 19 | 18 | 18 | 17 | 17 | 16 | 16 | 16 | 15 | 15 | 15 |
| 8 | 68 | 62 | 53 | 48 | 45 | 42 | 40 | 38 | 36 | 35 | 34 | 33 | 29 | 28 | 26 | 25 | 24 | 23 | 22 | 21 | 20 | 19 | 19 | 18 | 18 | 17 | 17 | 16 | 16 | 15 | 15 | 15 | 14 | 14 | 14 | 13 |
| 9 | 65 | 54 | 48 | 45 | 42 | 40 | 38 | 36 | 35 | 33 | 30 | 28 | 26 | 25 | 24 | 23 | 22 | 21 | 20 | 19 | 18 | 18 | 17 | 17 | 16 | 16 | 15 | 15 | 15 | 14 | 14 | 14 | 13 | 13 | 13 | 12 |
| 10 | 56 | 49 | 45 | 42 | 40 | 38 | 36 | 34 | 33 | 30 | 27 | 26 | 24 | 23 | 22 | 21 | 20 | 19 | 18 | 18 | 17 | 17 | 16 | 16 | 15 | 15 | 14 | 14 | 14 | 13 | 13 | 13 | 12 | 12 | 12 | 12 |
| 11 | 51 | 46 | 42 | 40 | 38 | 36 | 34 | 33 | 29 | 27 | 25 | 23 | 22 | 21 | 20 | 19 | 18 | 18 | 17 | 16 | 16 | 15 | 15 | 14 | 14 | 14 | 13 | 13 | 13 | 12 | 12 | 12 | 12 | 11 | 11 | 11 |
| 12 | 47 | 43 | 40 | 38 | 36 | 34 | 33 | 29 | 27 | 25 | 23 | 22 | 21 | 20 | 19 | 18 | 17 | 17 | 16 | 15 | 15 | 14 | 14 | 14 | 13 | 13 | 13 | 12 | 12 | 12 | 11 | 11 | 11 | 11 | 10 | 10 |
| 13 | 45 | 41 | 39 | 37 | 35 | 33 | 29 | 27 | 24 | 23 | 21 | 20 | 19 | 18 | 17 | 17 | 16 | 16 | 15 | 14 | 14 | 14 | 13 | 13 | 12 | 12 | 12 | 11 | 11 | 11 | 11 | 10 | 10 | 10 | 10 | 10 |
| 14 | 43 | 40 | 37 | 35 | 34 | 30 | 27 | 24 | 23 | 21 | 20 | 19 | 18 | 17 | 16 | 16 | 15 | 15 | 14 | 14 | 13 | 13 | 12 | 12 | 12 | 11 | 11 | 11 | 11 | 10 | 10 | 10 | 10 | 9 | 9 | 9 |
| 15 | 41 | 38 | 36 | 34 | 32 | 27 | 25 | 23 | 21 | 20 | 19 | 18 | 17 | 16 | 16 | 15 | 14 | 14 | 13 | 13 | 13 | 12 | 12 | 11 | 11 | 11 | 11 | 10 | 10 | 10 | 10 | 9 | 9 | 9 | 9 | 9 |
| 16 | 39 | 37 | 35 | 33 | 28 | 25 | 23 | 21 | 20 | 19 | 18 | 17 | 16 | 15 | 15 | 14 | 14 | 13 | 13 | 12 | 12 | 12 | 11 | 11 | 11 | 10 | 10 | 10 | 10 | 9 | 9 | 9 | 9 | 9 | 8 | 8 |
| 17 | 38 | 36 | 34 | 30 | 26 | 23 | 22 | 20 | 19 | 18 | 17 | 16 | 15 | 15 | 14 | 13 | 13 | 12 | 12 | 12 | 11 | 11 | 11 | 10 | 10 | 10 | 10 | 9 | 9 | 9 | 9 | 9 | 8 | 8 | 8 | 8 |
| 18 | 37 | 35 | 33 | 28 | 24 | 22 | 20 | 19 | 18 | 17 | 16 | 15 | 14 | 14 | 13 | 13 | 12 | 12 | 12 | 11 | 11 | 11 | 10 | 10 | 10 | 9 | 9 | 9 | 9 | 9 | 8 | 8 | 8 | 8 | 8 | 8 |
| 19 | 36 | 34 | 30 | 25 | 23 | 21 | 19 | 18 | 17 | 16 | 15 | 14 | 14 | 13 | 13 | 12 | 12 | 11 | 11 | 11 | 10 | 10 | 10 | 10 | 9 | 9 | 9 | 9 | 8 | 8 | 8 | 8 | 8 | 8 | 7 | 7 |
| 20 | 35 | 33 | 27 | 24 | 21 | 20 | 18 | 17 | 16 | 15 | 14 | 14 | 13 | 13 | 12 | 12 | 11 | 11 | 11 | 10 | 10 | 10 | 9 | 9 | 9 | 9 | 8 | 8 | 8 | 8 | 8 | 8 | 7 | 7 | 7 | 7 |
| 21 | 34 | 32 | 25 | 22 | 20 | 19 | 17 | 16 | 15 | 15 | 14 | 13 | 13 | 12 | 12 | 11 | 11 | 10 | 10 | 10 | 10 | 9 | 9 | 9 | 9 | 8 | 8 | 8 | 8 | 8 | 7 | 7 | 7 | 7 | 7 | 7 |
| 22 | 34 | 28 | 24 | 21 | 19 | 18 | 17 | 16 | 15 | 14 | 13 | 13 | 12 | 12 | 11 | 11 | 10 | 10 | 10 | 9 | 9 | 9 | 9 | 8 | 8 | 8 | 8 | 8 | 7 | 7 | 7 | 7 | 7 | 7 | 7 | 6 |
| 23 | 33 | 26 | 22 | 20 | 18 | 17 | 16 | 15 | 14 | 13 | 13 | 12 | 12 | 11 | 11 | 10 | 10 | 10 | 9 | 9 | 9 | 9 | 8 | 8 | 8 | 8 | 8 | 7 | 7 | 7 | 7 | 7 | 7 | 7 | 6 | 6 |
| 24 | 31 | 24 | 21 | 19 | 17 | 16 | 15 | 14 | 14 | 13 | 12 | 12 | 11 | 11 | 10 | 10 | 10 | 9 | 9 | 9 | 9 | 8 | 8 | 8 | 8 | 8 | 7 | 7 | 7 | 7 | 7 | 7 | 6 | 6 | 6 | 6 |
| 25 | 27 | 22 | 20 | 18 | 17 | 16 | 15 | 14 | 13 | 12 | 12 | 11 | 11 | 10 | 10 | 10 | 9 | 9 | 9 | 9 | 8 | 8 | 8 | 8 | 7 | 7 | 7 | 7 | 7 | 7 | 6 | 6 | 6 | 6 | 6 | 6 |
| 26 | 25 | 21 | 19 | 17 | 16 | 15 | 14 | 13 | 13 | 12 | 11 | 11 | 10 | 10 | 10 | 9 | 9 | 9 | 8 | 8 | 8 | 8 | 8 | 7 | 7 | 7 | 7 | 7 | 7 | 6 | 6 | 6 | 6 | 6 | 6 | 6 |
| 27 | 23 | 20 | 18 | 17 | 15 | 14 | 13 | 13 | 12 | 12 | 11 | 11 | 10 | 10 | 9 | 9 | 9 | 8 | 8 | 8 | 8 | 8 | 7 | 7 | 7 | 7 | 7 | 7 | 6 | 6 | 6 | 6 | 6 | 6 | 6 | 6 |
| 28 | 22 | 19 | 17 | 16 | 15 | 14 | 13 | 12 | 12 | 11 | 11 | 10 | 10 | 9 | 9 | 9 | 8 | 8 | 8 | 8 | 8 | 7 | 7 | 7 | 7 | 7 | 6 | 6 | 6 | 6 | 6 | 6 | 6 | 6 | 5 | 5 |
| 29 | 21 | 18 | 17 | 15 | 14 | 13 | 13 | 12 | 11 | 11 | 10 | 10 | 10 | 9 | 9 | 9 | 8 | 8 | 8 | 8 | 7 | 7 | 7 | 7 | 7 | 6 | 6 | 6 | 6 | 6 | 6 | 6 | 6 | 5 | 5 | 5 |
| 30 | 20 | 18 | 16 | 15 | 14 | 13 | 12 | 12 | 11 | 10 | 10 | 10 | 9 | 9 | 9 | 8 | 8 | 8 | 8 | 7 | 7 | 7 | 7 | 7 | 6 | 6 | 6 | 6 | 6 | 6 | 6 | 5 | 5 | 5 | 5 | 5 |
| 31 | 19 | 17 | 15 | 14 | 13 | 13 | 12 | 11 | 11 | 10 | 10 | 9 | 9 | 9 | 8 | 8 | 8 | 8 | 7 | 7 | 7 | 7 | 7 | 6 | 6 | 6 | 6 | 6 | 6 | 6 | 5 | 5 | 5 | 5 | 5 | 5 |
| 32 | 18 | 16 | 15 | 14 | 13 | 12 | 11 | 11 | 10 | 10 | 9 | 9 | 9 | 8 | 8 | 8 | 8 | 7 | 7 | 7 | 7 | 7 | 6 | 6 | 6 | 6 | 6 | 6 | 6 | 5 | 5 | 5 | 5 | 5 | 5 | 5 |

Maximum allowable number of messages ( IP + RC ) that can be transmitted in 5 seconds

# Appendix C

# Excitation Modes

This appendix describes the various excitation modes (signal descriptions) and their associated parameter settings.

## Excitation Modes and Parameter Settings

The table below lists the excitation modes and the associated parameter settings.

| Excitation Mode [Signal Description] | Parameter Settings |
|---|---|
| Continuous DC Mode (DC)<br>[Continuous Unmodulated Carrier (131.5kHz))] | RCS =N; RES=N; REM=C; RET=D; HCC=x; HCS=x; HE1=x; HE0=x |
| Continuous AC Mode (AC)<br>[Continuous Carrier (131.5kHz), modulated ON/OFF by 610 Hz.] | RCS =N; RES=N; REM=C; RET=A; HCC=x; HCS=x; HE1=x; HE0=x |
| Alternating Mode (ACDC)<br>[AC mode for 0.2s, followed by DC mode for 0.2s, and NO signal for 0.1s. When a message is received, the existing excitation type is extended for 0.5 s, and the cycle starts again.] | RCS =N; RES=N; REM=A; RET=x HCC=x; HCS=x; HE1=x; HE0=x |
| Switching DC Mode (SMDC).<br>[Switching between DC mode for $\alpha$*10ms, and NO signal for $\beta$*10ms.] | RCS =N; RES=Y; REM=C; RET=D; HCC=x; HCS=x; HE1=$\alpha$; HE0= $\beta$ |
| Switching AC Mode (SMAC).<br>[Switching between AC mode for $\alpha$*10ms, and NO signal for $\beta$*10ms.] | RCS =N; RES=Y; REM=C; RET=A; HCC=x; HCS=x; HE1=$\alpha$; HE0= $\beta$ |
| Conditional Switching DC Mode (CSDC).<br>[When a valid message is received, the SMDC mode is modified as follows: SMDC mode continues for $\gamma$*s, followed by DC mode for $\delta$*s, then back to the SMDC mode.] | RCS =Y; RES=Y; REM=C; RET=D; HCC=$\delta$; HCS=$\gamma$; HE1=$\alpha$; HE0= $\beta$ |
| Conditional Switching AC Mode (CSAC).<br>[When a valid message is received, the SMAC mode is modified as follows: SMAC mode continues for $\gamma$*s, followed by AC mode for $\delta$*s, then back to the SMAC mode.] | RCS =Y; RES=Y; REM=C; RET=A; HCC=$\delta$; HCS=$\gamma$; HE1=$\alpha$; HE0= $\beta$ |

**Table C-1: Excitation Modes - Parameter Settings**

**Note** (x) - can be anything.

This page intentionally left blank.

# Appendix D

# Reader Software Upgrade Procedure

This appendix describes the procedures for upgrading the Reader RD21 (P/N 600002) main software using the serial interface RS232 or RS485. This software controls the functionality of the Micro controller placed on the Receiver assembly REC21 (P/N 500007).

## Upgrading the Firmware

Upgrading the firmware involve the following steps:

1. Setting the Reader's Address to 0
2. Saving parameters (those that are different from default)
3. Upgrading the firmware itself by using:

   a) The RS232 interface

   or

   b) The RS485 interface: 4-wire communication line or 2-wire communication line

3. Restoring parameters
4. Setting the Reader's Network Configuration
5. Final instructions

### Setting the Reader's Address

To set the Reader's address, do the following:

1. If the Reader already has an address, for example r, then set this address to 0 by typing the following commands:

   ```
   @r IAD=0<Enter>
   @r :CONFIG:STORE<Enter>
   @r :RESET<Enter>
   ```

   For more information, refer to *Storing the Reader's Configuration* on page 5-17.

2. Check whether the Reader's address is 0, by typing the following command:

   ```
   IVN<Enter>
   ```

   The Reader must respond with its software version number. If not, repeat Step 1.

## Saving Parameters

Follow these steps:

**Note** To determine a parameter's value, for example, DCI, type the following command:

DCI<Enter>

For example, the Reader responds:

DCI=30

where 30 is the parameter value.

3. If the Reader was already configured, write down all parameters whose values differ from the set default values.

   For example, for an IPC installation, write down the values for the following parameters: DCI, DRI, HTL, RCC, RSS.

4. Send:

   :CONFIG:DEFAULT<Enter>

## Using the RS232 Interface

Follow these steps:

1. Connect your PC (COM port) to the Reader RD21 (RS232 interface) using a standard RS232 cable. For more information, refer to *Setting Up the Reader/PC Connection* on page 5-2.

2. Start the upgrading procedure by typing the following command:

   :CONFIG:FIRMWARE:LOAD<Enter>

   or type the following shortcut:

   F<Enter>

3. Start XMODEM, send protocol on the PC, and then send the new firmware file. Lyngsoe recommends having the new file on your hard drive and not on a floppy disk.

4. Wait until the transfer process is complete. If the 21 Series RFID System aborted the transfer process, repeat Step 2.

5. If the downloading process was successful, wait for the Reader to reset - it takes about 5-7 seconds. For more information on the Reader's power-up sequence, refer to *Reader's Power-up Sequence* on page 5-4. If the Reader did not reset properly and did not send a sign-on message, then switch the Reader's power supply Off and then On.

6. To verify whether the upgrade process was successful, type the following command:

   IVN<Enter>

The Reader must respond with the new firmware version number, for example:

```
Receiver REC21 (c)Copyright Lyngsoe Systems Ltd. 2003
```

If not, repeat the procedure from Step 2.

7. If after completing Step 5, you still cannot communicate with the Reader, replace the Reader with another unit and return the faulty one to Lyngsoe.

## Using the RS485 Interface

### 4-wire Communication Line

Follow these steps:

1. Connect your PC (COM port) to a Converter RS232/RS485. Connect the 4-wire communication line to the Converter (RS485 side). For more information on the communication line connection to the Reader, refer to *Connecting the RS485 Four-Wire Communication Line* on page 2-3 and *Setting Up the Reader/PC Connection* on page 5-2.

   You can have a different assignment for the RS485 interface on the Converter side. Use the following conventions for the connections between the Reader RD21 and the PC:

   A <--> TX+;  B <--> TX-;  Z <--> RX+;  Y <--> RX-.

2. To upgrade the Reader's software, follow steps Steps 2 - 5 in *Using the RS232 Interface* above.

## Restoring Parameters

Follow these steps:

1. Verify whether parameters were set to default during the upgrade procedure, by checking their values. If yes, then reset their values to the saved values (see Saving Parameters on Page D-2).

**Note**

a) Reader firmware ignores leading zeros for integers.

b) If the Reader was already configured on the site, you have to restore all application parameters queried during the *Saving Parameters* step, or restart the configuration process as described in Chapter 5, *Configuration and Operation*.

3. Check the values of the new parameters, if any, that were introduced by this software version.

## Setting the Reader's Network Configuration

To set the Reader's network configuration, do the following:

1. Set the Reader's address to its initial value (see step 1 in *Setting the Reader's Address*): by typing:

   IAD=r<Enter>

2. Store the Reader's parameters, by typing:

   :CONFIG:STORE<Enter>

3. Reset the Reader, by typing:

   :RESET<Enter>

4. Verify that the Reader is functioning properly, by typing:

   @r IVN<Enter>

   where r is the Reader's address. The Reader must respond with its software version number.

5. Verify that the parameters set in the following sections are correct:

   - Steps 2 and 3 from the section, *Restoring Parameters* above.
   - Step 1 in this section.

**Final Instructions**

1. You must repeat this procedure for each Reader RD21 that is installed on the site.
2. Lyngsoe recommends using the RS232 or RS485 4-wire communication line to upgrade the Reader's software (these are more reliable communication links).
3. For more information on the Reader's RD21 configuration, see Chapter 5, *Configuration and Operation*.

This page intentionally left blank.

# Appendix E

# Reader Hardware Calibration Procedure

This appendix describes the procedures for storing and resetting the calibration data in the Reader RD21 (P/N 600002). This procedure must only be used in a controlled lab environment.

When first manufactured, certain calibration parameters (special parameters) are stored in a permanent memory location in the Reader. Once stored, these parameters are not affected by the :CONFIG:DEFAULT, :CONFIG:REVERT commands or firmware upgrades. Neither can they be manually changed. These are board specific parameters and as such should remain untouched for the service life of the board.

The special parameter group includes:

HV0, HV1, HD0, HD1, ISN and ISC.

For detailed explanations refer to the *RFID System S21 Reference Guide*.

## Introducing Special Parameters

When REC21 board is powered up for the first ime (during manufacturing), the Data LED starts flashing with a 1sec interval. This flashing indicates that special parameters are not stored. All special parameters must be set to the proper values for the board to be operational.

Introduce all special parameters, when done, the Data LED stops blinking. At this point the service person must carefully check for any typos or wrong values. If an error occured when introducing a parameter, the Reader has to be reset and <u>all</u> special parameter values reintroduced anew.

After making sure that all calibration parameters are correct and Data LED is OFF and not blinking, send

::CONFIG:HW<Enter>

This finalizes the permanent storage of calibration (special) parameters.

## Notes

In certain special cases, it could be neccessary to change the calibration values set at production time. To return the Reader to the pre-production state, do the following:

1. Turn OFF Reader’s power.
2. Press and hold down the Reset Button on the Motherboard.
3. Turn ON Reader’s power without releasing the Reset Button.
4. Wait 7sec and release the Reset Button.
5. Make sure that the Data LED is now flickering at a 1Hz rate.
6. Go to Introducing Special Parameters.

This page intentionally left blank.

# Glossary

**a.c. (ac)**

Alternating current.

**ASCII (American Standard Code for Information Interchange)**

A system used to represent alphanumeric data; a 7-bit-plus-parity character set established by ANSI and used for data communications and data processing.

**Bit**

A binary digit; the smallest unit of data in the binary counting system, A bit has a value of either 0 or 1.

**Byte**

A group of eight bits that represent one data character.

**Carrier**

A signal that is modulated by a message signal to allow communication.

**Channel**

A communication path between a transmission source and receiver.

**CMOS**

See *Complementary metal-oxide semiconductor.*

**Complementary metal-oxide semiconductor (CMOS)**

A technology that combines the electrical properties of n-type semiconductors and p-type semiconductors.

**Cut-off frequency**

Frequency at which a circuit output falls to a specified fraction (usually half) of the maximum.

**dB**

Decibel. Dimensionless unit expressing the ratio of two powers, voltages or currents.

**d.c. (dc)**

Direct current.

**Duplex**

Simultaneous operation of both channels of a communication link.

**EEPROM**

Electrically erasable programmable read only memory.

**FM**

See *Frequency modulation.*

**Frequency Modulation (FM)**

Modulation by varying the frequency of a fixed-amplitude carrier signal in accordance with an information signal. Contrast with amplitude modulation (AM).

**Frequency-Shift Keying (FSK)**

Frequency modulation of a carrier by a digital modulating signal.

**FSK**

See *Frequency-shift keying*.

**LED**

See *light emitting diode*.

**LF**

Abbreviation for low frequency band-30 to 300 kHz.

**Light-emitting diode (LED)**

A unit that accepts electrical impulses and converts them into a light signal.

**OOK**

On/Off Keying.

**PCB**

Printed circuit board.

**PEROM**

Programmable and erasable read only memory.

**RAM**

See *Random Access Memory.*

**Random Access Memory (RAM)**

Semiconductor-based memory that can be read and written by the microprocessor or other hardware devices. (Generally referred to as volatile memory that can be written or read.)

**Read Only Memory (ROM)**

Semiconductor-based memory that contains instruction or data that can be read but not modifies. (Generally, the term ROM often means any read-only device.)

**RFID**

Radio Frequency Identification.

**ROM**

See *Read Only Memory.*

**Rx**

Receiver.

**SRAM**

Static Read Only Memory.

**Tx**

Transmitter.

**UHF**

Ultra High Frequency band - 30 to 300 MHz.

**µC**

Micro controller.

This page intentionally left blank.

## A

AC Source TRM95 A-5

## C

Configuration principles 1-3
Configuring
    Reader's application parameters 5-16

## D

description
    reading points 1-2
    response signal 1-2
    Transponders 1-2

## E

excitation modes C-1
Exciter
    assembling the LF antenna 3-2
    connecting the power supply 3-5
    connecting the RS-485 communication lines 3-3
    installing 3-1
    LF antenna connections 3-3
    setting up addresses 5-7
    setting up the test-tag 5-12
    tools required 3-1
Exciter address 1-5
Exciters
    hardware specifications A-4

## G

general rules 1-3

## H

hardware specifications A-1

## L

learning procedure 5-4
LF transmitter output 5-8

## M

manual
    definitions 1-i
    summary 1-i
    text conventions 1-i
message format
    Transponder B-1
Motion Sensor
    Exciter 5-15
    Reader 5-14

## P

parameter settings C-1
parameters
    Transponder B-1
Postal RFID System
    components 1-3
    descripiton 1-3
    using 1-2
Power Supply
    tools required 4-1
programming site
    setting up 6-2

## R

Reader 2-1
    assembling 2-1
    checking parameters 5-5
    configuring 5-10
    configuring application parameters 5-16
    configuring the network parameters 5-17
    connecting external devices 2-8
    connecting the Exciter communication line 2-4
    connecting the power supply 2-5
    connecting the RS-232 communication line 2-2
    connecting the RS-485 4-wire communication line 2-3
    hardware calibration procedure 1-1
    power-up sequence 5-4
    resetting 5-5
    storing the configuration 5-17
reader address 1-4
Reader data handling 1-4
Reader RD21 (600002) 1-1
Reader serial port 1-4
Readers
    communicating with Transponders 1-2
    hardware specifications A-2
    system performance A-5
reading points
    description 1-2
real time clock 1-4
related manuals 1-ii
response signal
    description 1-2
RFID System
    configuring 5-1–

5-20
self testing capabilities A-6

## S

setting up carrier threshold 5-10, 5-12
setting up the Reader/PC connection 5-2
setting up the Real Time Clock 5-13
system code 1-3
system performance
Readers A-5
Transponders A-5

## T

testing
System 95 5-18
text conventions 1-ii
Transponder
message format B-1
parameters B-1
programming 6-1–??
Transponder Identification System
purpose 1-1
Transponders
communicating with Readers 1-2
decription 1-2
examples 1-2
hardware specifications A-1
system performance A-5
Troubleshooting 7-1

## U

UHF data receiving 1-4
upgrade procedures
upgrading the firmware D-1
upgrading procedures
final instructions D-5
restoring parameters D-4
saving parameters D-2
setting the Reader's address D-1
setting the Reader's network configuration D-4
using the RS232 Interface D-2
using the RS485 Interface D-3