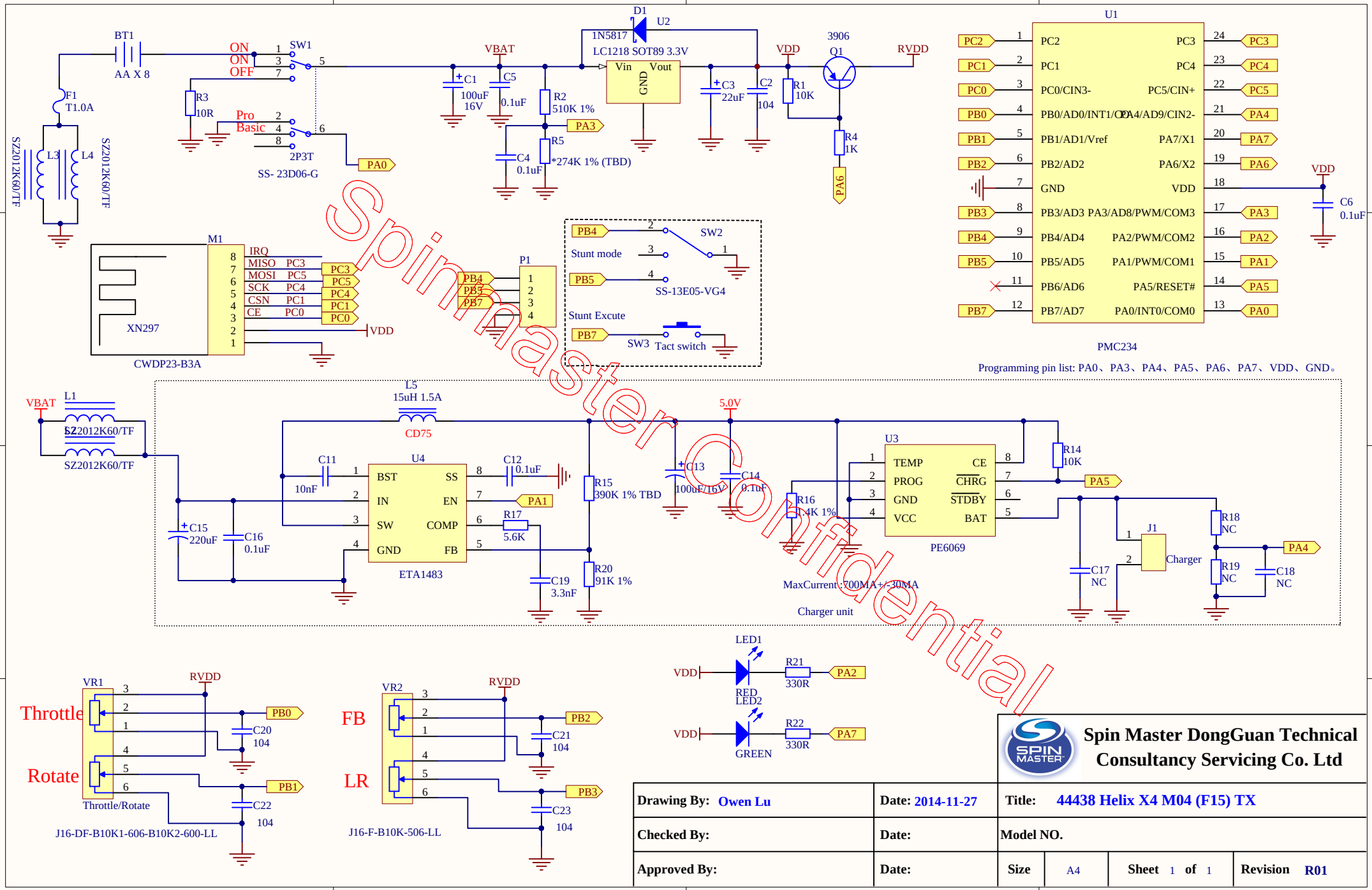

Spinmaster Confidential

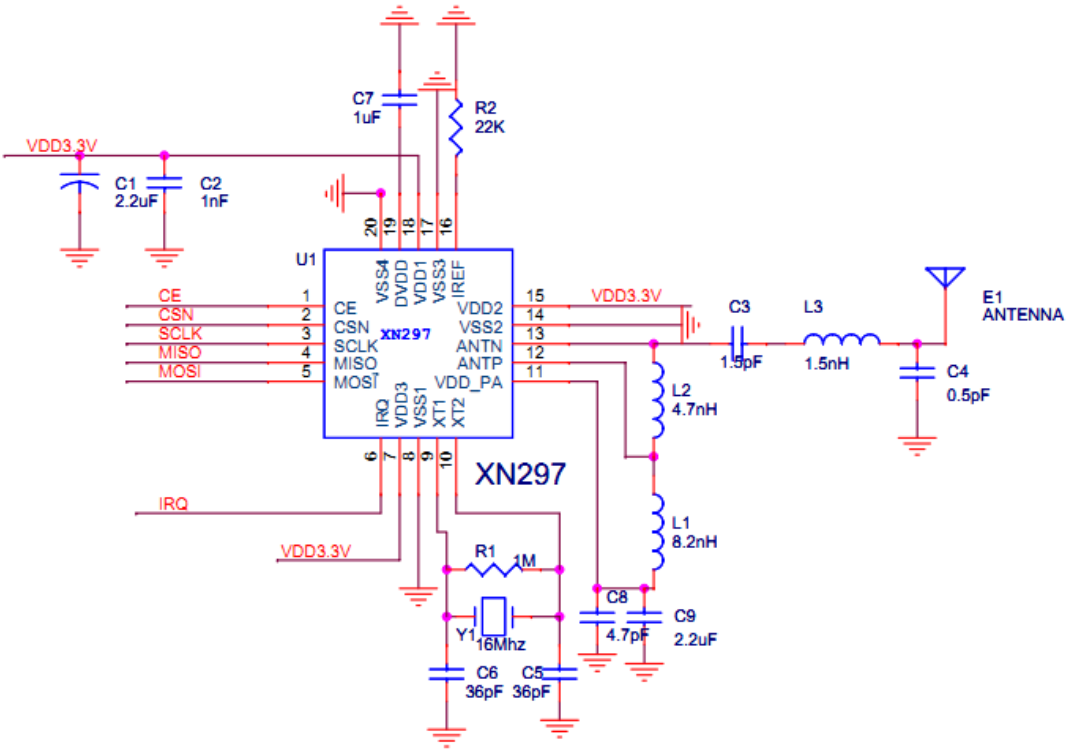
VDD3.3V
C1
2.2uF
C2
1nF
C7
1uF
R2
22K
U1
VSS4
DVDD
VDD1
VSS3
IREF
20
19
18
17
16
CE
CSN
SCLK
MISO
MOSI
1
2
3
4
5
CE
CSN
SCLK
MISO
MOSI
XN297
VDD2
VSS2
ANTN
ANTP
VDD_PA
15
14
13
12
11
VDD3.3V
IRQ
VDD3
VSS1
XT1
XT2
6
7
8
9
10
XN297
IRQ
VDD3.3V
R1
1M
Y1
16Mhz
C6
36pF
C5
36pF
C8
4.7pF
C9
2.2uF
L2
4.7nH
L1
8.2nH
C3
1.5pF
L3
1.5nH
C4
0.5pF
E1
ANTENNA