TITLE

MOLEX WIFI DUAL-BAND ANTENNA_HINGED

TABLE OF CONTENTS

1.0 SCOPE

2.0 PRODUCT DESCRIPTION

3.0 APPLICABLE DOCUMENTS

4.0 ANTENNA PERFORMANCE

5.0 RF PERFORMANCE AS A FUNCTION OF IMPLEMENTATION

6.0 CHANGE HISTORY

MOLEX WIFI DUAL-BAND ANTENNA_HINGED

1.0 SCOPE

This specification describes the antenna application and surrounding. The information in this document is for reference and benchmark purposes only. The user is responsible for validating antenna RF performance based on the user's actual implementation.

Antenna illustrations in this document are generic representations. They are not intended to be an image of any antenna listed in the scope.

2.0 PRODUCT DESCRIPTION

2.1 PRODUCT NAME AND SERIES NUMBER (S)

Product name: Molex WIFI Dual Band Antenna Hinged

Series Number: 212860

2.2 DESCRIPTION

212860 is external antenna being designed to cover WIFI working frequencies in the 2.4-2.5GHz and 5.15-5.85GHz. The joint hinge of the antenna allows 90° rotating on vertical plane, and the SMA-J connector allows 180°rotating on horizontal plane.

2.3 PRODUCT STRUCTURE INFORMATION

Please refer to PS-2128600001 for full information.

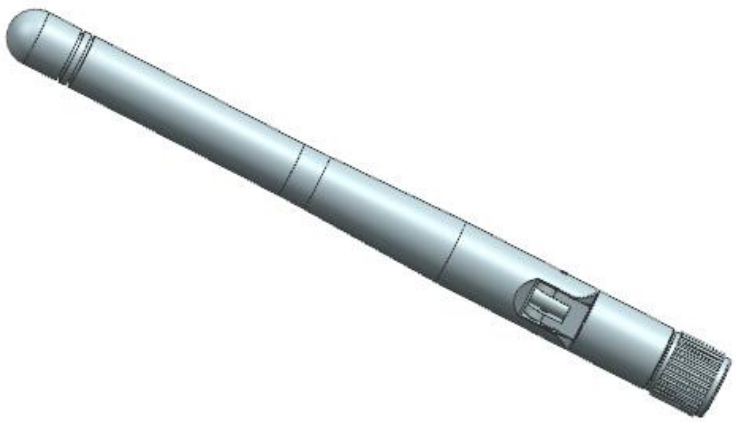

2128600001 Molex WIFI Dual Band Antenna Hinged 3D VIEW

3.0 APPLICABLE DOCUMENTS

DOCUMENT	NUMBER	DESCRIPTION
Sale Drawing (SD)	SD-2128600001	Mechanical Dimension of the product
Product Specification (PS)	PS-2128600001	Product Specification
Packing Drawing (PK)	PK-2128600001	Product packaging specifications

4.0 ANTENNA PERFORMANCE

4.1 RF TEST CONDITIONS

All measurements are done of the antenna mounted on a 100mm*100mm ground PCB with VNA Agilent E5071C and Over-The-Air (OTA) chamber for the part No.212860 series.

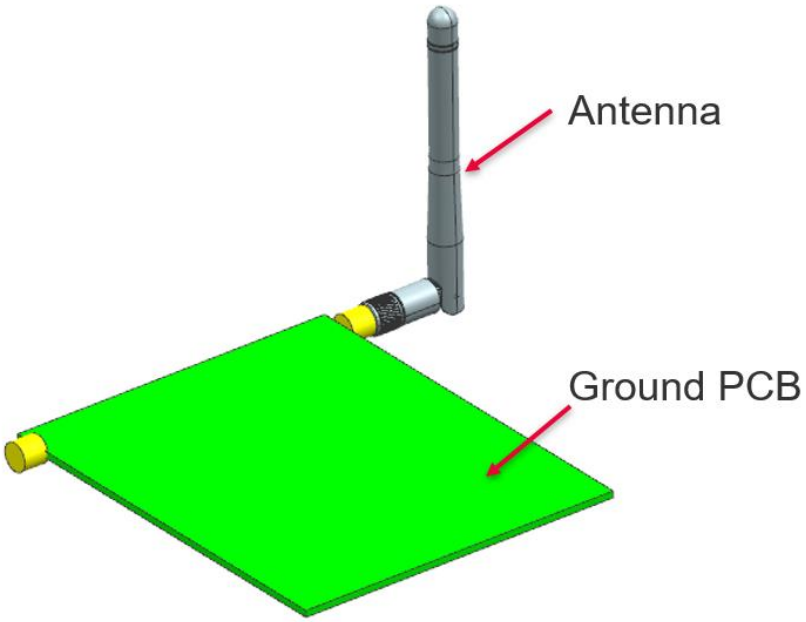

FIGURE4.1.1 ANTENNA MOUNTED ON A 100MM*100MM GROUND PCB

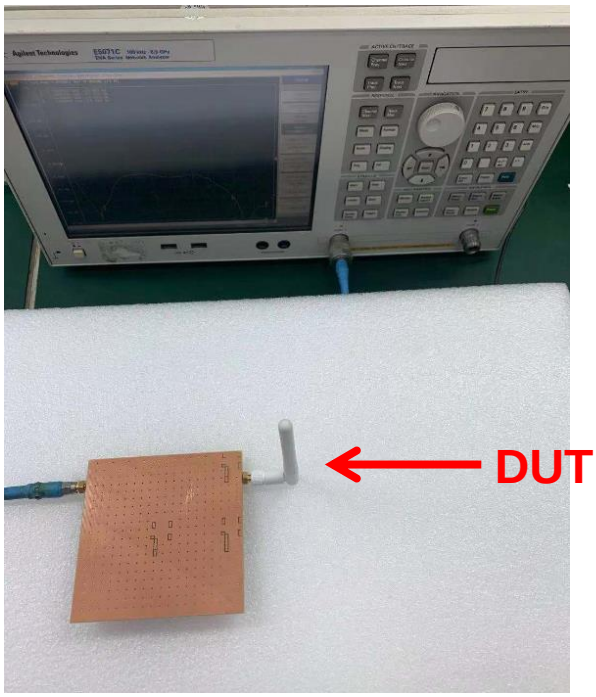

FIGURE4.1.2 ANTENNA MOUNTED ON 100MM*100MM GROUND PCB TESTED WITH VNA E5071C

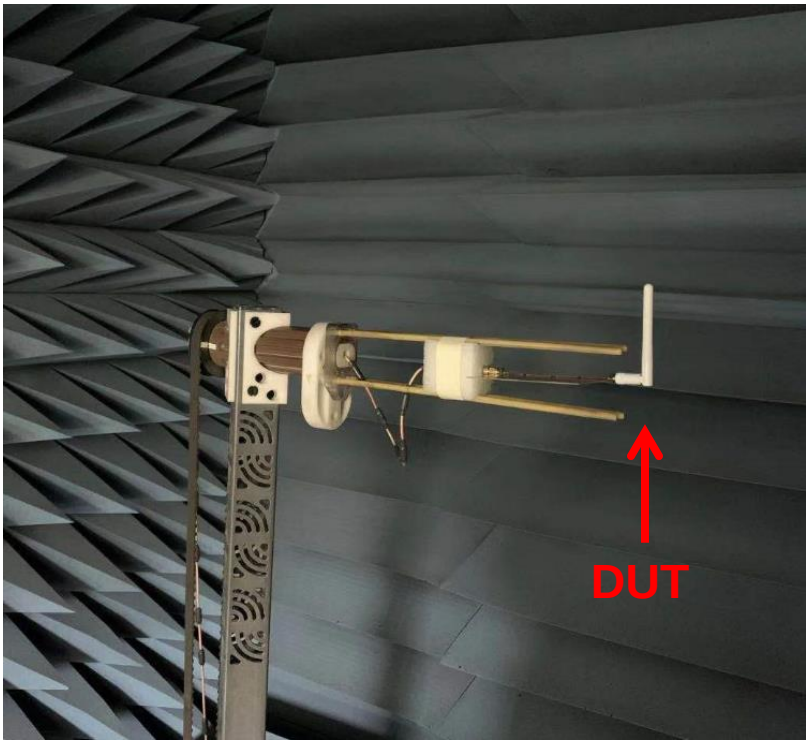

FIGURE4.1.3 ANTENNA MOUNTED ON 100MM*100MM GROUND PCB TESTED IN OTA CHAMBER

4.2 ANTENNA PERFORMANCE

Description	Equipment	Requirement	
Frequency Range	VNA E5071C	2.4-2.5GHz	5.15-5.85GHz
Return Loss	VNA E5071C	<-10 dB	<-10 dB
Peak Gain (Max)	OTA Chamber	5.3dBi	4.5dBi
Average Total Efficiency	OTA Chamber	>80%	>75%
Polarization	OTA Chamber	Linear	
Input Impedance	VNA E5071C	50 ohms	

Note that the above antenna performance is measured with just the antenna mounted on a PCB to simulate a free-space condition. When implement into the system, the resonant frequency might be off-tune due to the loading of surrounding components especially metal plane. This off-tune can be compensated through matching. Although module manufacturers specify a peak gain limit, it is based on free-space conditions. The peak gain will be degraded by 1 to 2dB in the actual implementation as the radiation pattern will change due to the surrounding components. As such, during selection of antenna, you can select one with high peak gain to compensate for the loss. Molex can offer assistant to choose the best location and best tuning in-order to meet this peak gain requirement.

4.3 RETURN LOSS PLOT

All measurements in this document are done by installing the antenna on 100mm*100mm ground PCB.

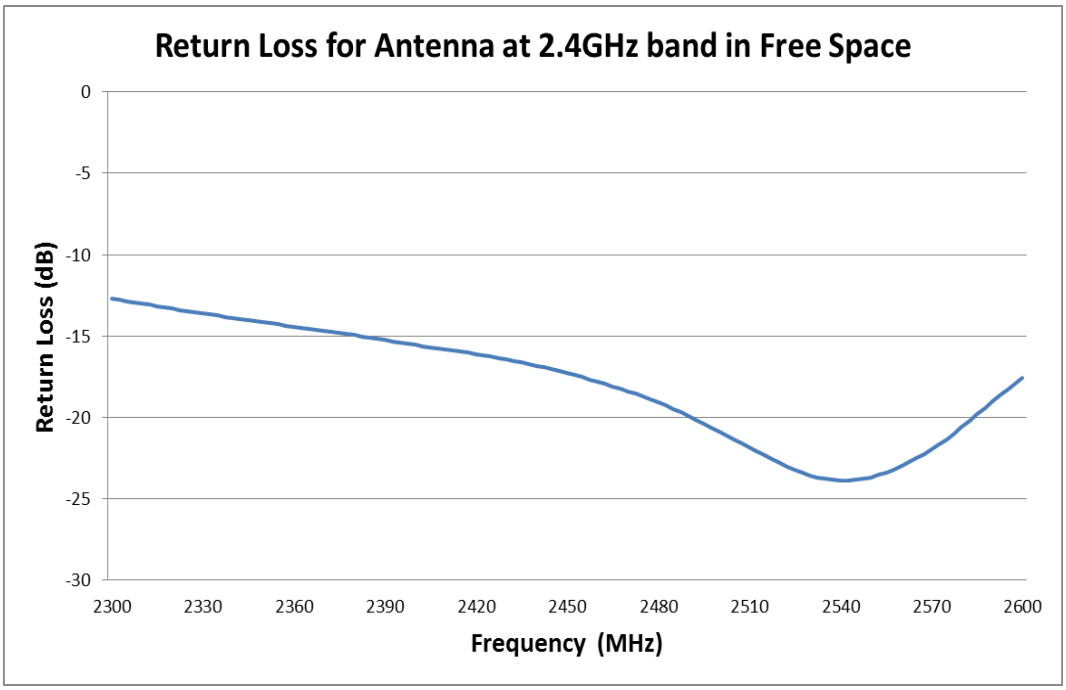

FIGURE 4.3.1 RETURN LOSS OF ANTENNA AT 2.4GHZ BAND IN FREE SPACE

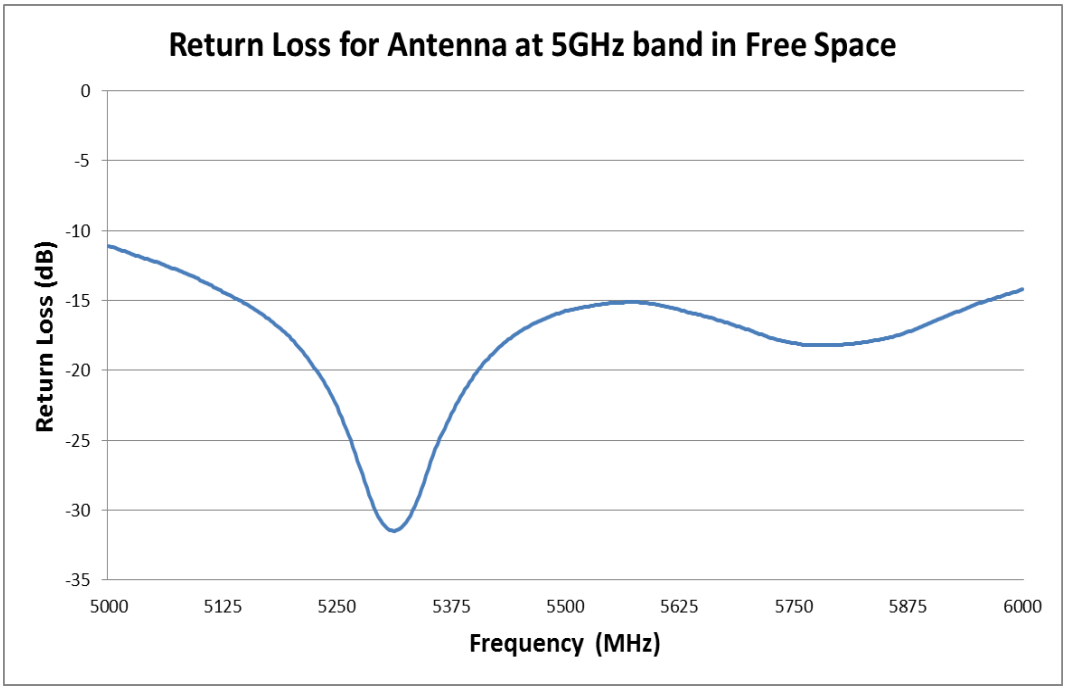

FIGURE 4.3.2 RETURN LOSS OF ANTENNA AT 5GHZ BAND IN FREE SPACE

4.4 EFFICIENCY PLOT

All measurements in this document are done by installing the antenna on 100mm*100mm ground PCB.

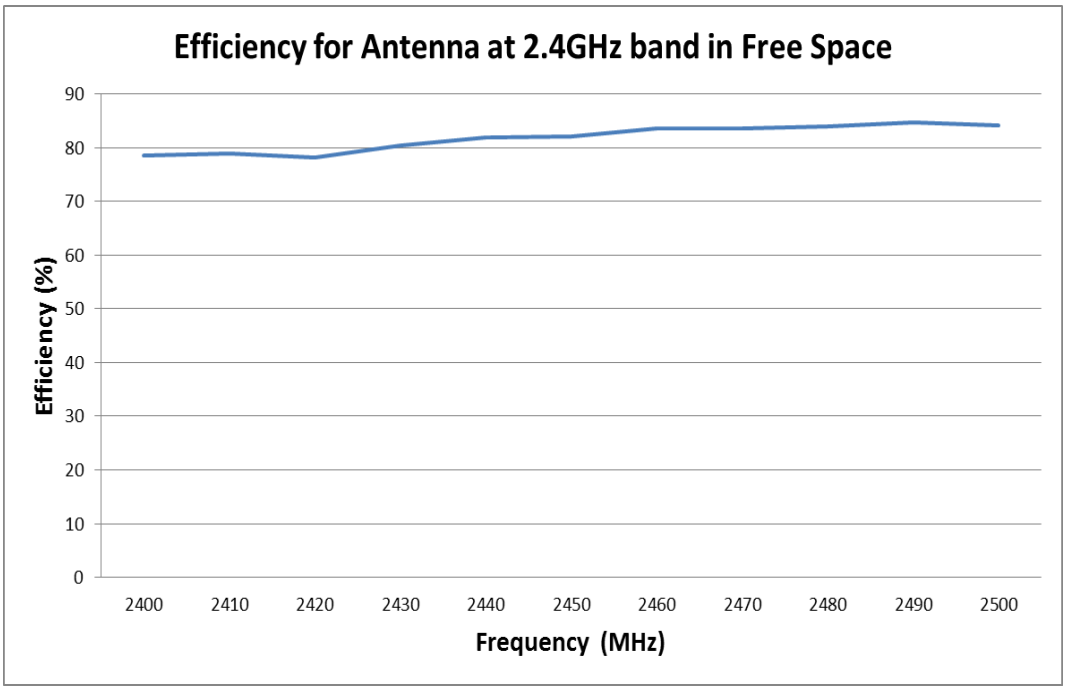

FIGURE 4.4.1 EFFICIENCY OF ANTENNA AT 2.4GHZ BAND IN FREE SPACE

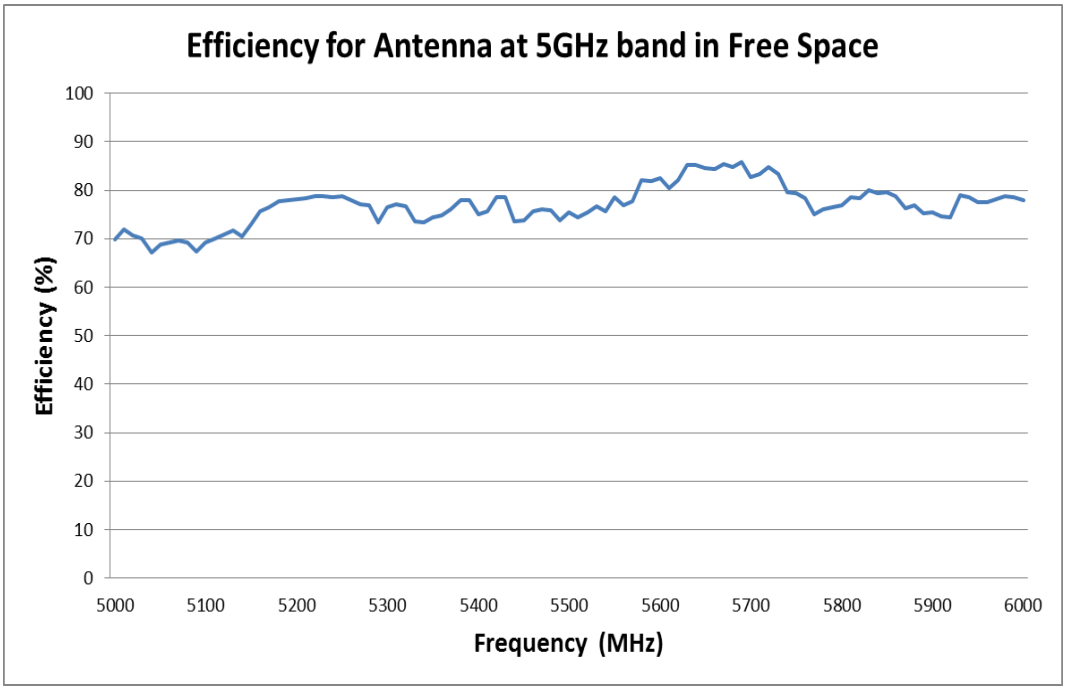

FIGURE 4.4.2 EFFICIENCY OF ANTENNA AT 5GHZ BAND IN FREE SPACE

4.5 2D/3D RADIATION PATTERN

All measurements in this document are done by installing the antenna on 100mm*100mm ground PCB.

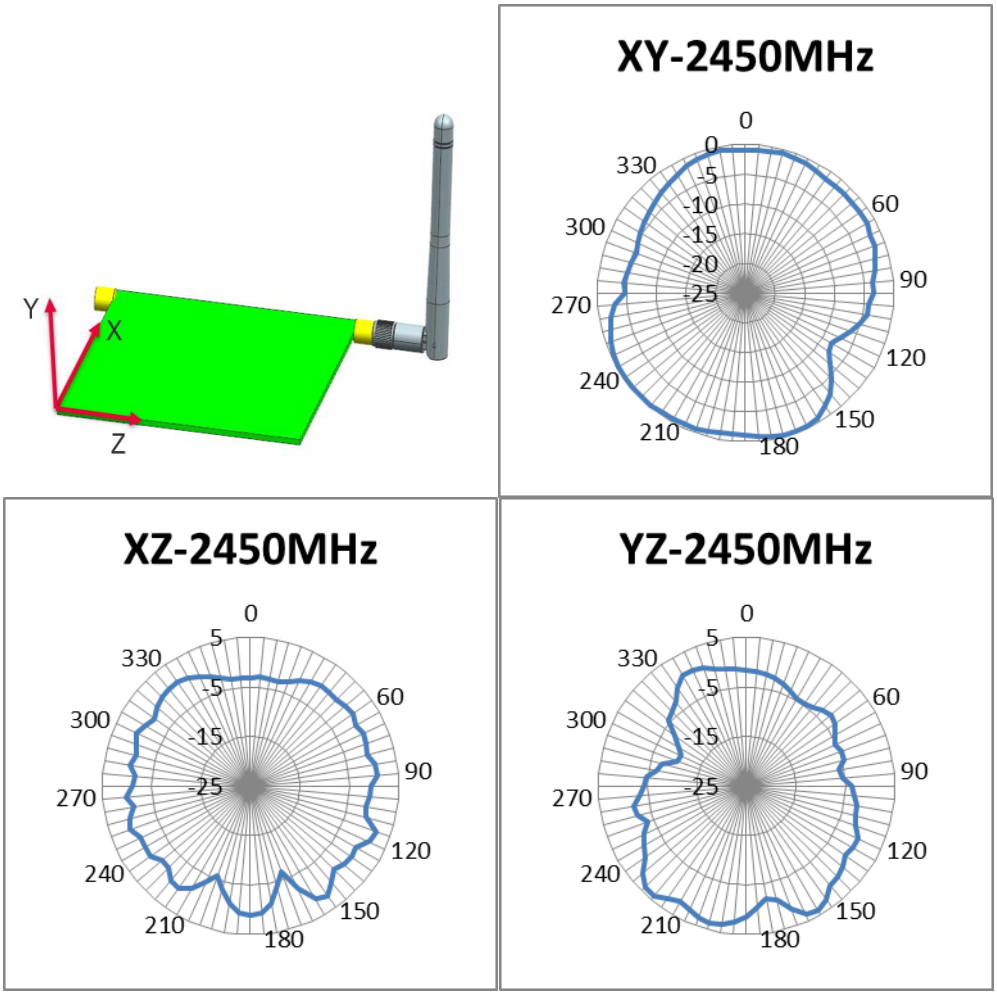

FIGURE 4.5.1 2D RADIATION PATTERN OF ANTENNA AT 2450MHZ IN FREE SPACE

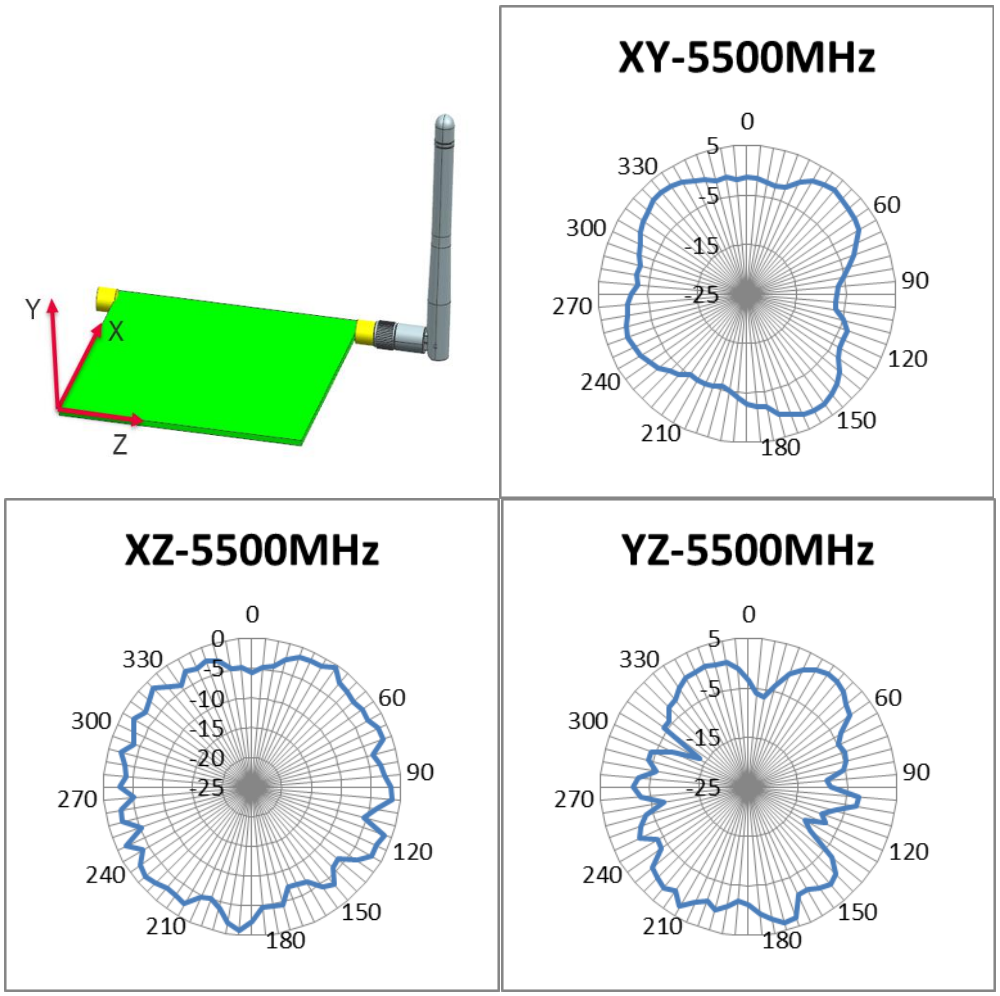

FIGURE 4.5.2 2D RADIATION PATTERN OF ANTENNA AT 5500MHZ IN FREE SPACE

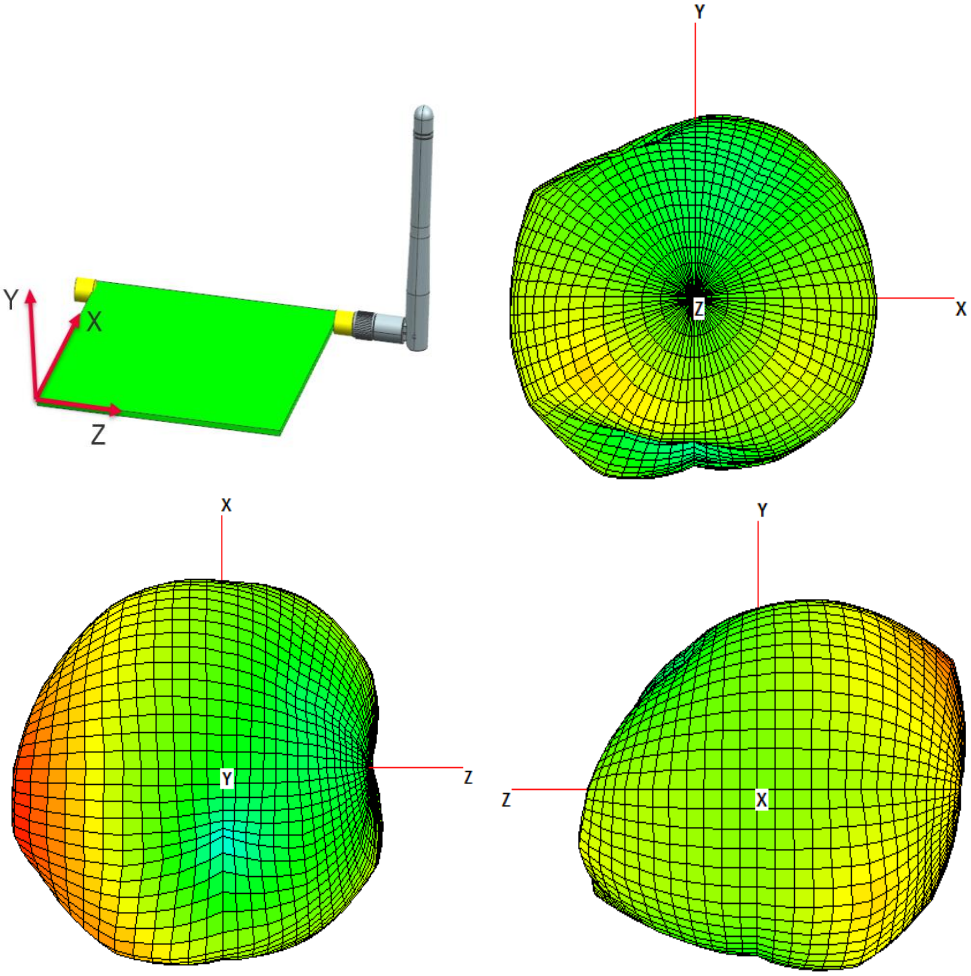

FIGURE 4.5.3 3D RADIATION PATTERN OF ANTENNA AT 2450MHZ IN FREE SPACE

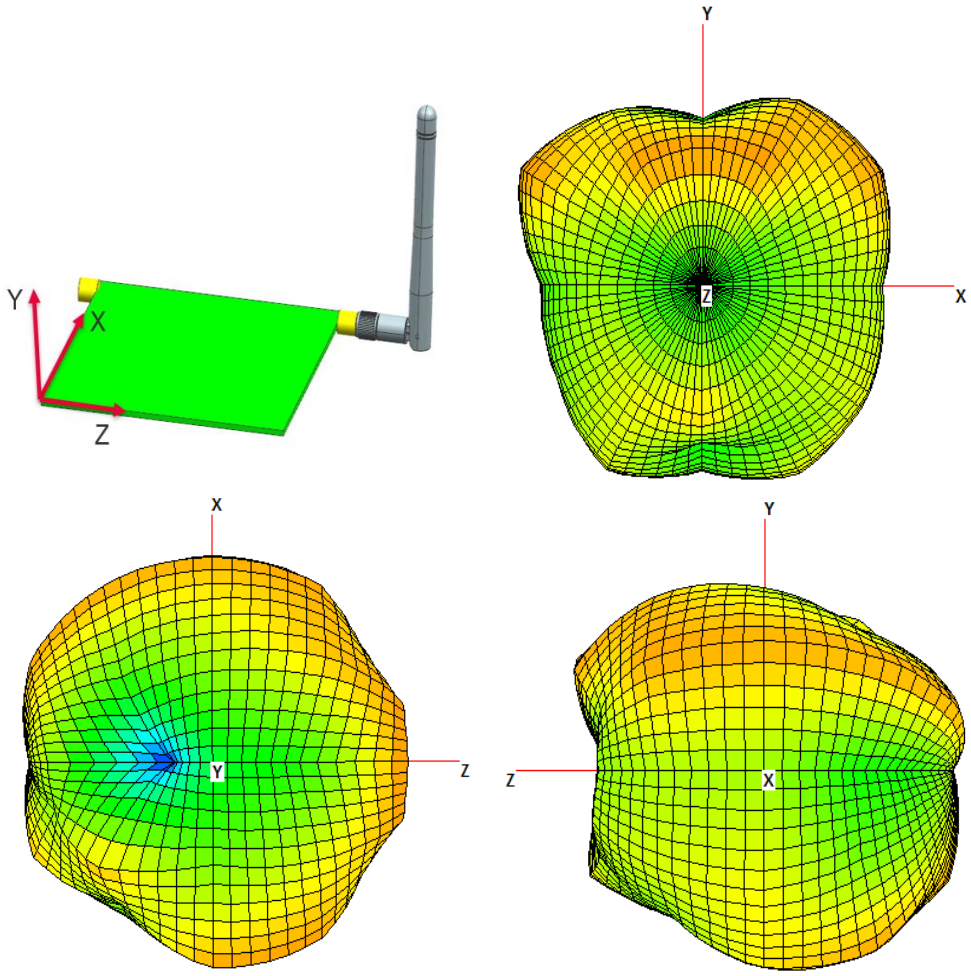

FIGURE 4.5.4 3D RADIATION PATTERN OF ANTENNA AT 5500MHZ IN FREE SPACE

5.0 RF PERFORMANCE AS A FUNCTION OF IMPLEMENTATION

5.1 ANTENNA RF PERFORMANCE AS A FUNCTION OF DIFFERENT STATES

Four states for antenna have been evaluated and these states are shown in figure 5.1.0. The ground size is 100mm*100mm. The performance of antenna installed on ground PCB is better than that without ground PCB. The reference state with antenna mounted on ground PCB and bending 90 degree is recommended, which is a generally used state.

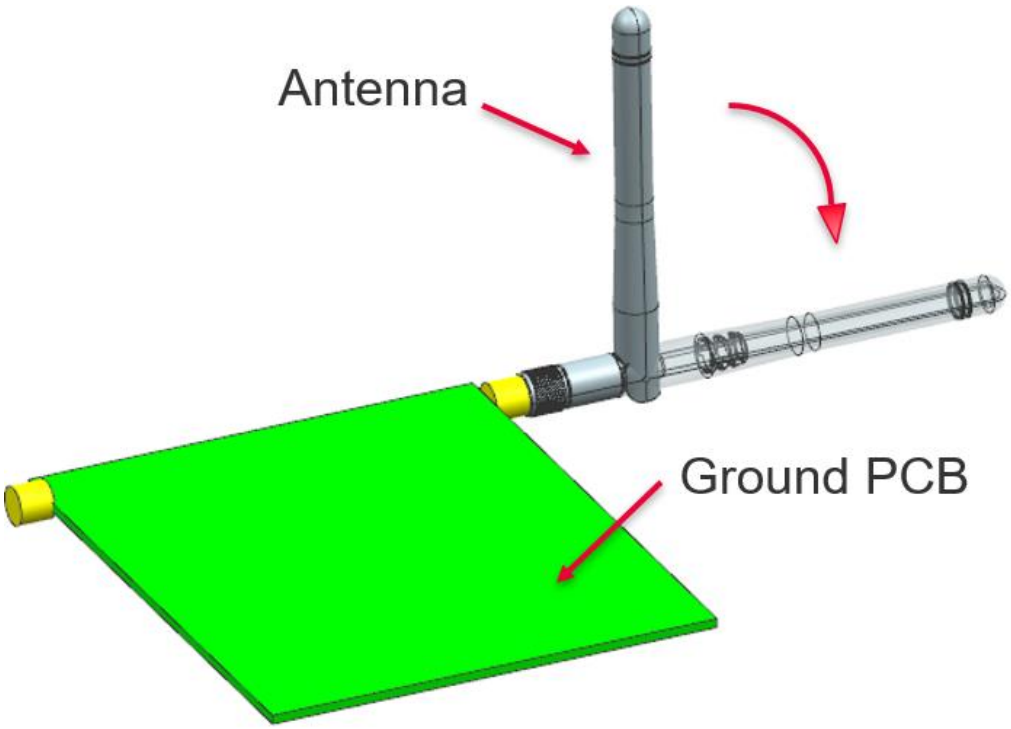

FIGURE 5.1.0 FOUR STATES FOR ANTENNA

Ground PCB Size: 100mm*100mm;
Reference state: Antenna mounted on ground PCB with bending 90 degree;
State 2: Antenna mounted on ground PCB without bending;
State 3: Single antenna without bending (without ground PCB);
State 4: Single antenna with bending 90 degree (without ground PCB).

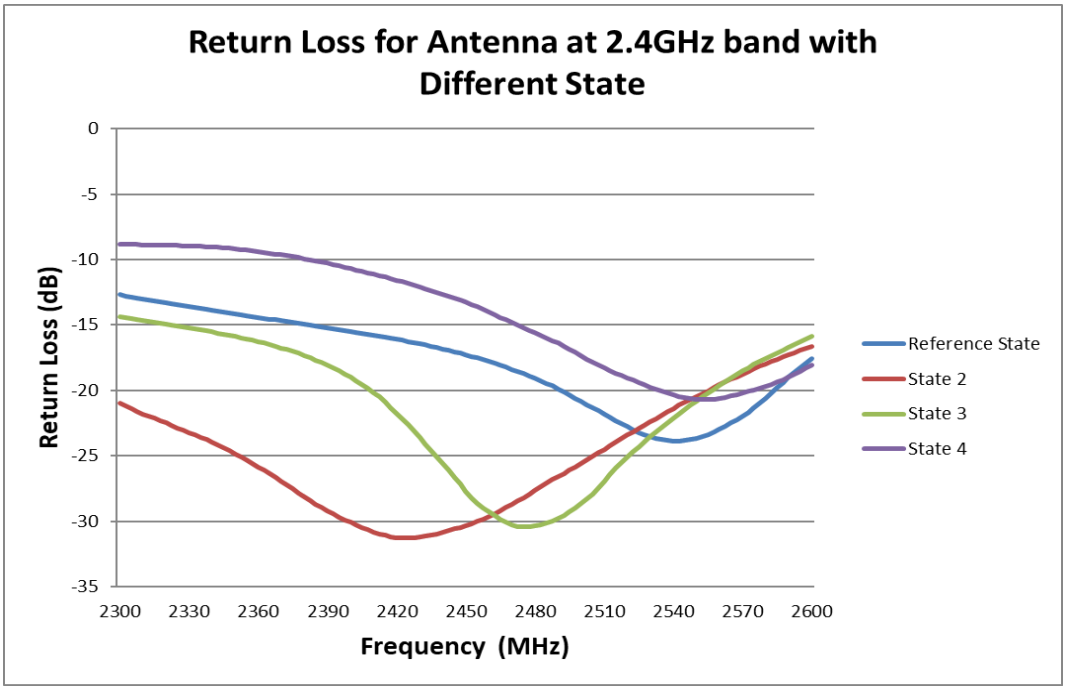

FIGURE 5.1.1 RETURN LOSS OF ANTENNA AT 2.4GHZ BAND WITH DIFFERENT STATE

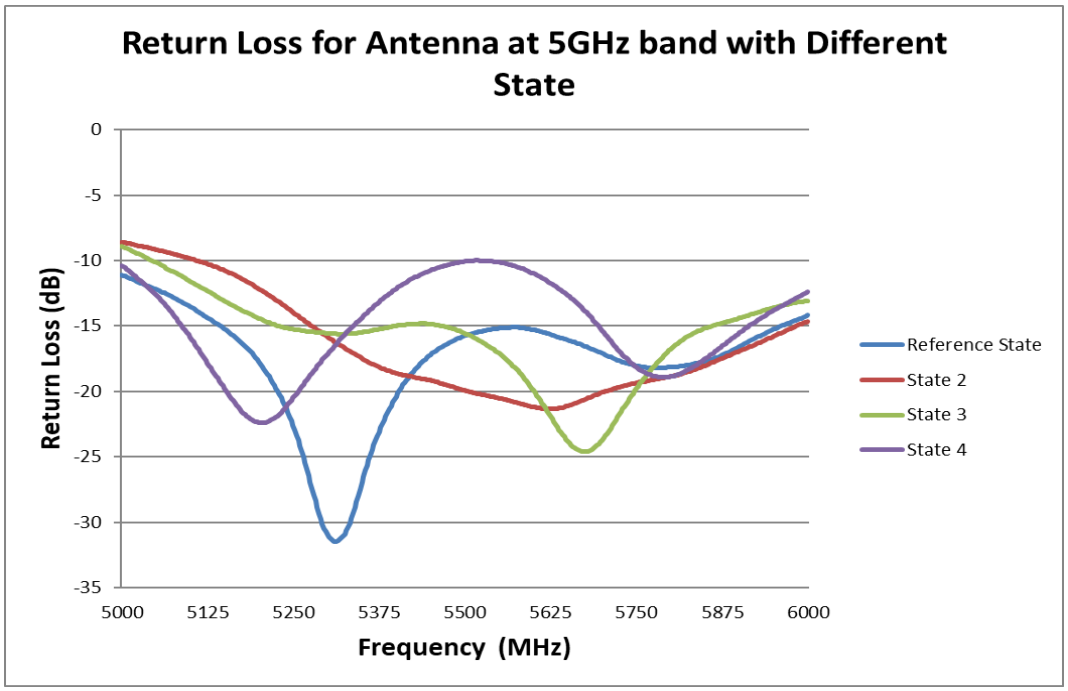

FIGURE 5.1.2 RETURN LOSS OF ANTENNA AT 5GHZ BAND WITH DIFFERENT STATE

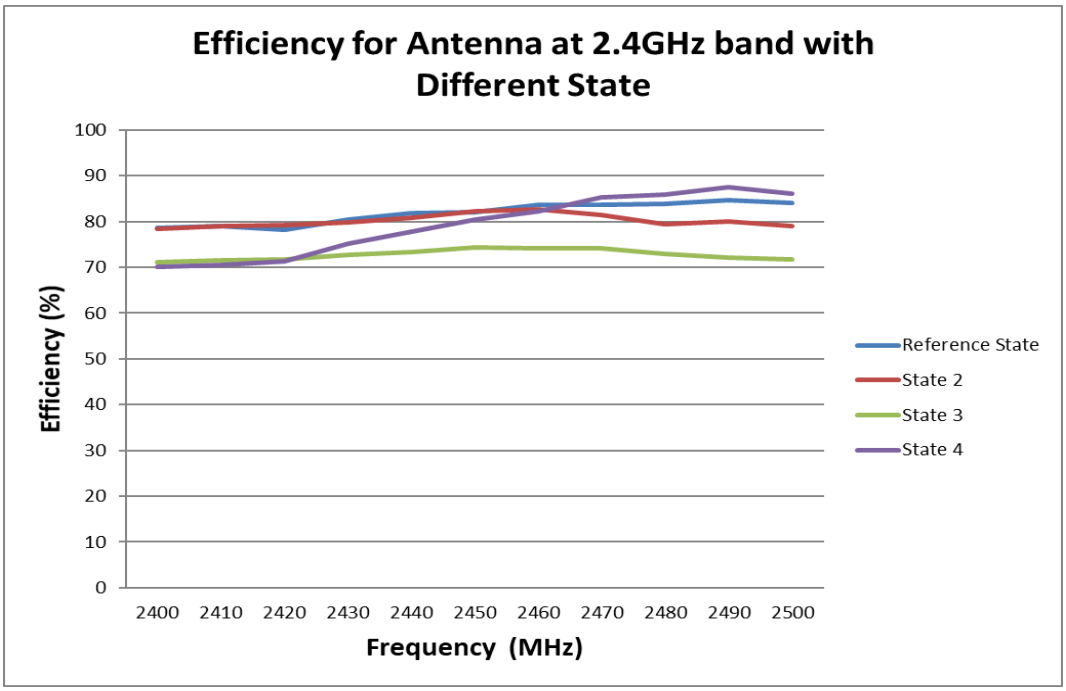

FIGURE 5.1.3 EFFICIENCY OF ANTENNA AT 2.4GHZ BAND WITH DIFFERENT STATE

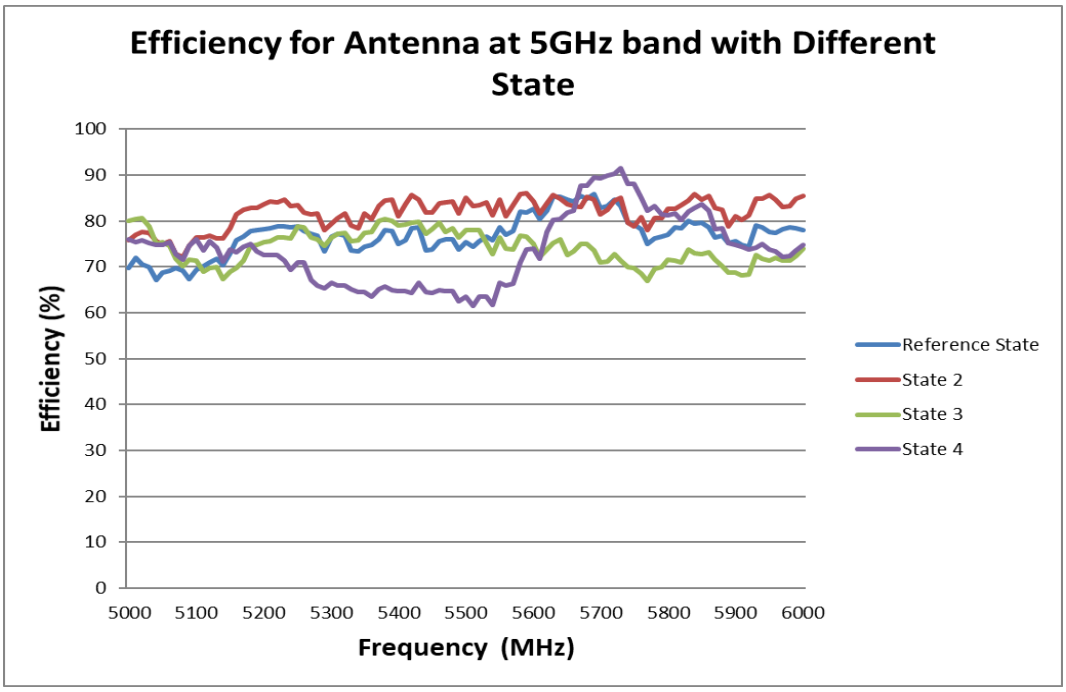

FIGURE 5.1.4 EFFICIENCY OF ANTENNA AT 5GHZ BAND WITH DIFFERENT STATE

5.2 ANTENNA RF PERFORMANCE AS A FUNCTION WITH DIFFERENT GROUND SIZE

Five different ground size have been evaluated and the size are shown in figure 5.2.0. The change of ground size has little effect on the antenna performance, the minimum ground size is suggested to be 100*100mm.

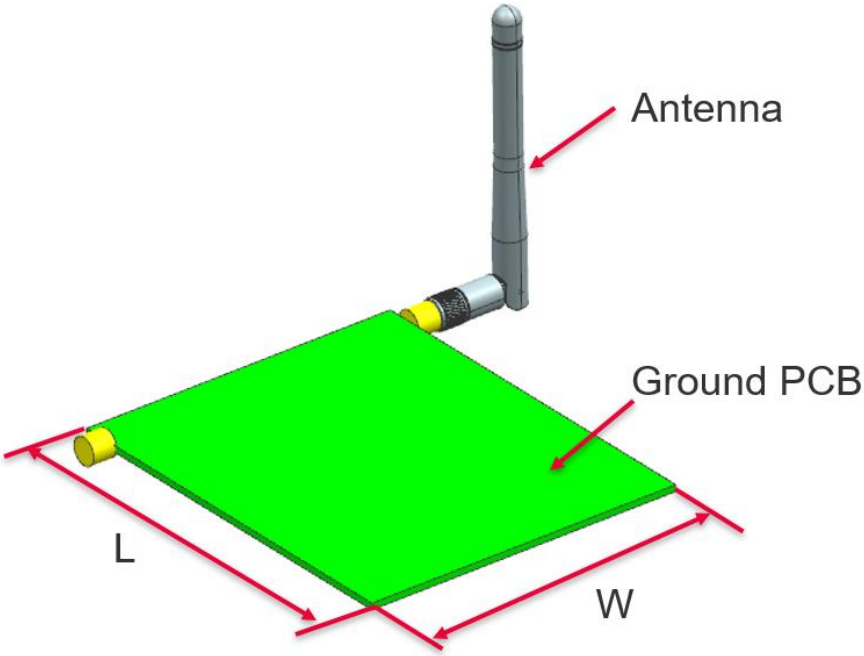

L*W (50*50、70*70、100*100、120*120、150*150)

FIGURE 5.2.0 FIVE DIFFERENT GROUND SIZE

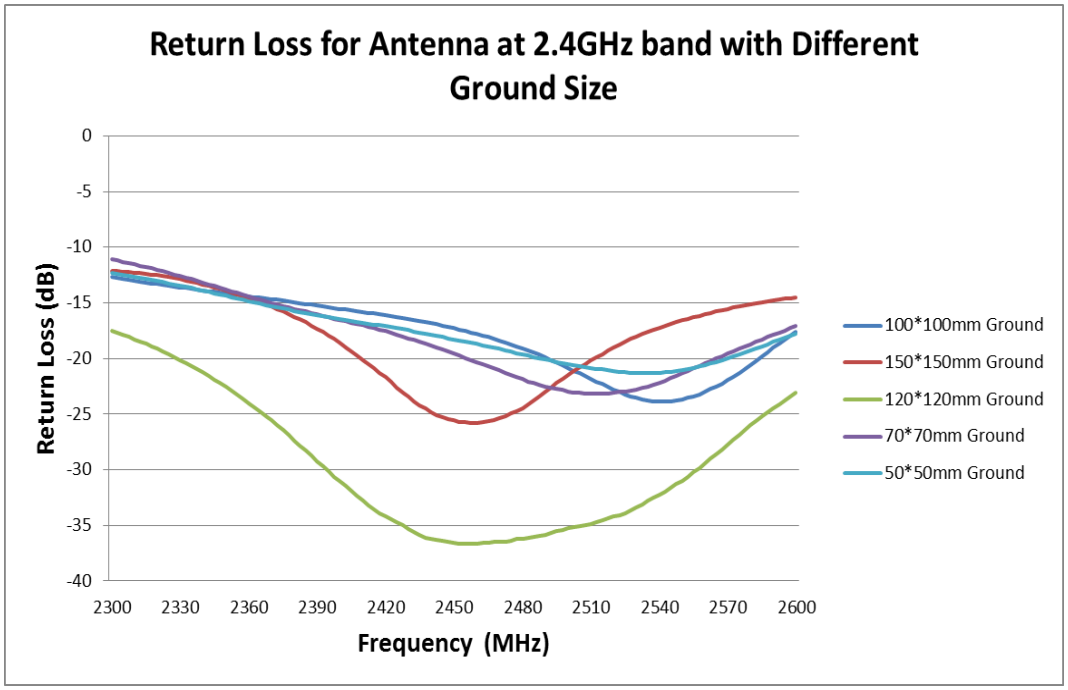

FIGURE 5.2.1 RETURN LOSS OF ANTENNA AT 2.4GHZ BAND WITH DIFFERENT GROUND SIZE

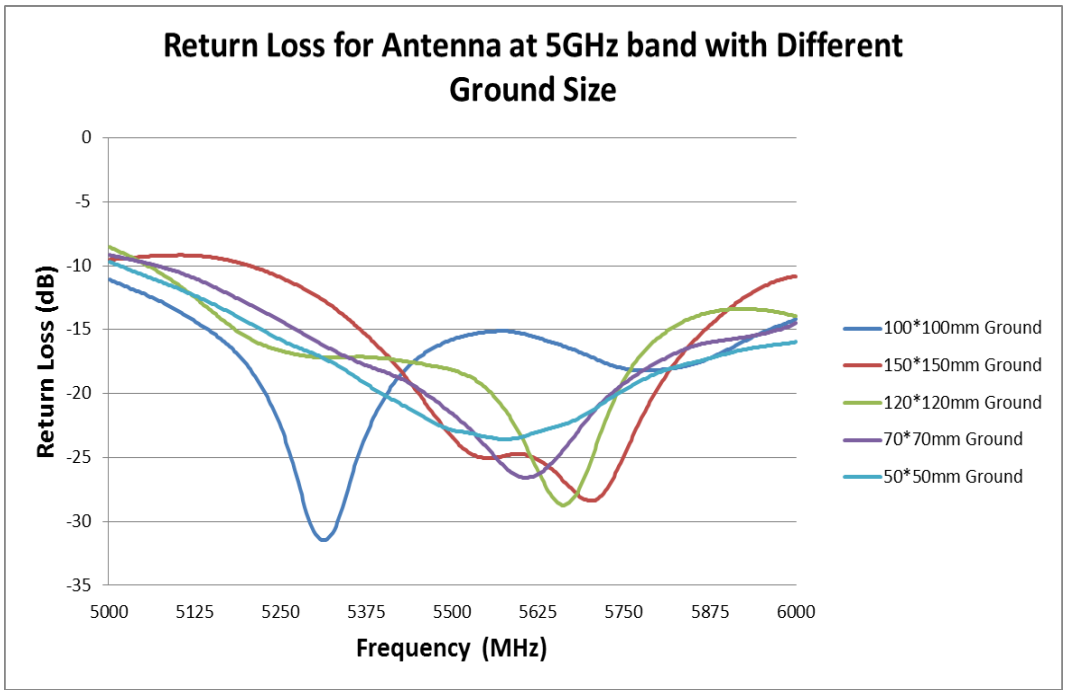

FIGURE 5.2.2 RETURN LOSS OF ANTENNA AT 5GHZ BAND WITH DIFFERENT GROUND SIZE

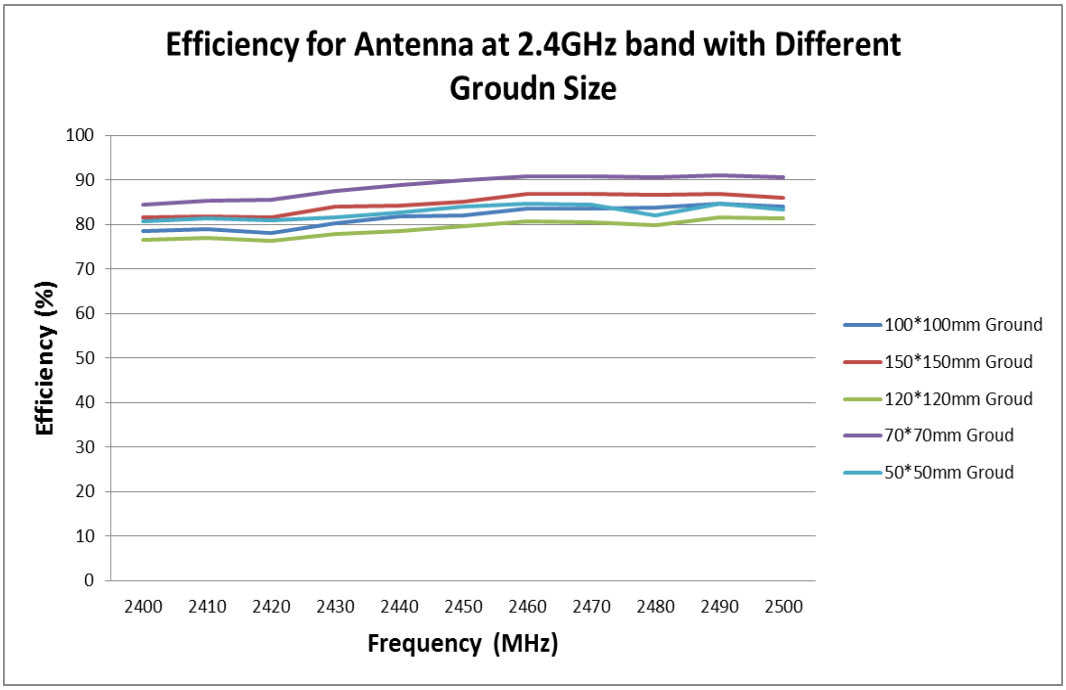

FIGURE 5.2.3 EFFICIENCY OF ANTENNA AT 2.4GHZ BAND WITH DIFFERENT GROUND SIZE

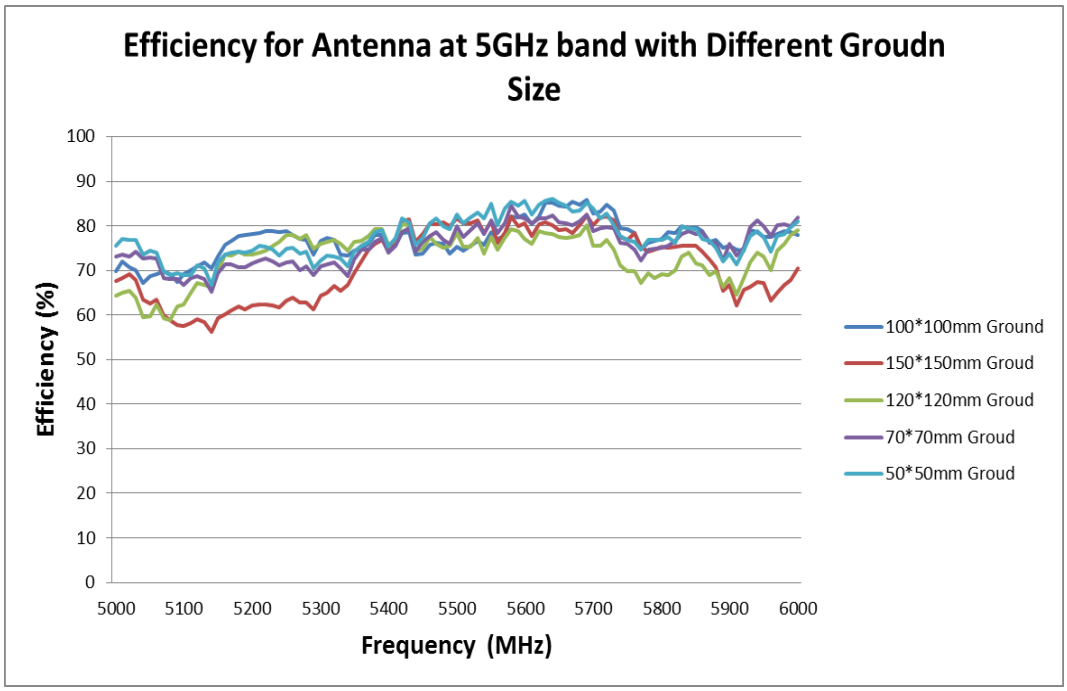

FIGURE 5.2.4 EFFICIENCY OF ANTENNA AT 5GHZ BAND WITH DIFFERENT GROUND SIZE

6.0 CHANGE HISTORY

REV	DATE	DESCRIPTION
A	2019/10/19	First Release
B	2022/10/31	Update gain values in Table 4.2.