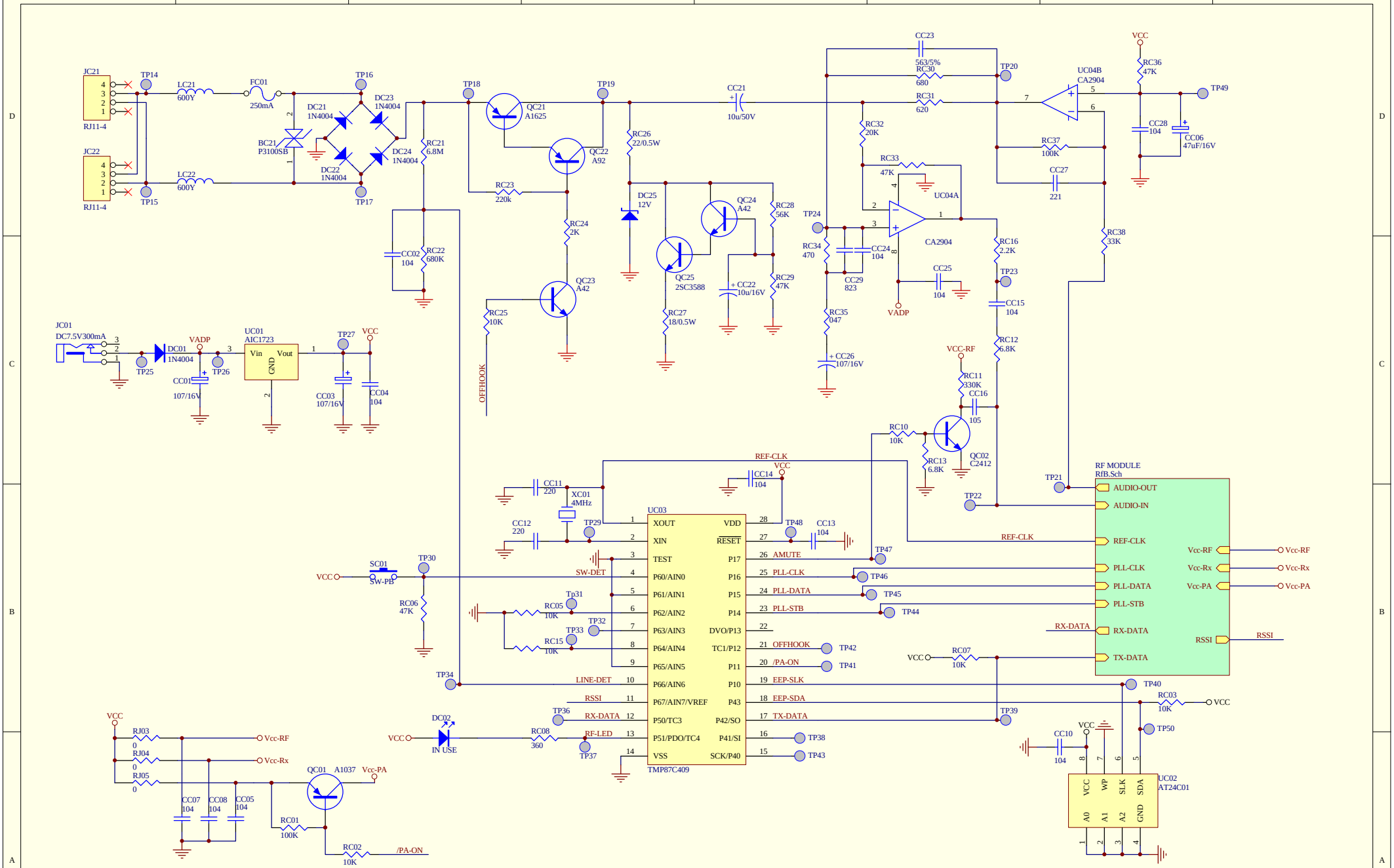

INVENTEC	Title ***Base Station CPU (Base)***				ITEM NAME **MIVO250**
CHECK	DESIGN ***INC ED3***	Date:	Ver. **0F**	FILE NO.	ITEM NO. **ITEM NO.**
APPROVAL	DRAW ***INC ED3***	Size: A4	Sheet 1 of 2	Print Date: 24-Aug-2001 09:43:34	
		File Name: E:\temp\mivo250_MP.ddb - MP\BaseSch\base.Sch			

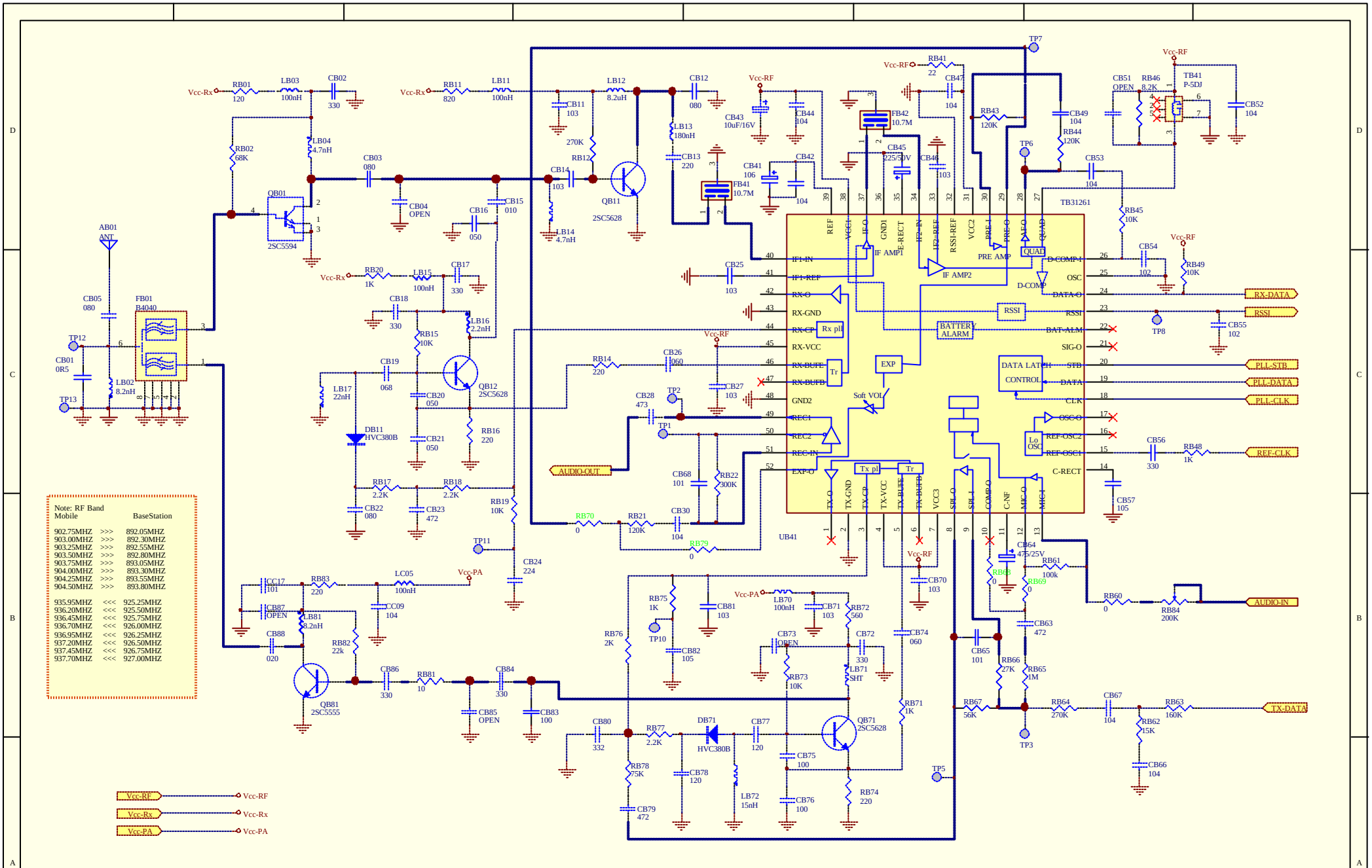

INVENTEC	Title: 900MHz RF MODULE (Base)			ITEM NAME: MIVO250
CHECK	DESIGN: INC ED3	Date:	Ver. 0F	FILE NO.	ITEM NO.: ITEM NO.
APPROVAL	DRAW: INC ED3	Size: A4	Sheet 2 of 2	Print Date: 26-Jul-2001 16:24:30
		File Name: E:\mivo250\mivo250_PR.ddb - PR\BaseSch\RFB.Sch		