MICROWAVE OVEN HOOD COMBINATION OWNER'S MANUAL

Table of Contents

MICROWAVE OVEN SAFETY 2
MICROWAVE OVEN MAINTENANCE AND CARE 3
General Cleaning 3
INSTALLATION REQUIREMENTS 4
Tools and Parts 4
Location Requirements 4
Installation Dimensions 5
Electrical Requirements 5
INSTALLATION INSTRUCTIONS 6
Prepare Microwave Oven Hood Combination 6
Installation Types 7
Reciculation Installation 7
Find The Wall Stud(s) 7
Mark Rear Wall 7
Drill Holes in Rear Wall 8
Attach Mounting Plate to Wall 8
Prepare Upper Cabinet 9
Install the Microwave Oven 9
Complete Installation 10
Wall Venting Installation 11
Roof Venting Installation 13
VENTING DESIGN SPECIFICATIONS 15

IMPORTANT:
Save for local electrical inspector's use.

W12345678A

MICROWAVE OVEN SAFETY

Your safety and the safety of others are very important.

We have provided many important safety messages in this manual and on your appliance. Always read and obey all safety messages.

This is the safety alert symbol.

This symbol alerts you to potential hazards that can kill or hurt you and others.

All safety messages will follow the safety alert symbol and either the word “DANGER” or “WARNING.” These words mean:

⚠ DANGER — **You can be killed or seriously injured if you don't immediately follow instructions.**

⚠ WARNING — **You can be killed or seriously injured if you don't follow instructions.**

All safety messages will tell you what the potential hazard is, tell you how to reduce the chance of injury, and tell you what can happen if the instructions are not followed.

IMPORTANT SAFETY INSTRUCTIONS

When using electrical appliances basic safety precautions should be followed, including the following:

WARNING: To reduce the risk of burns, electric shock, fire, injury to persons, or exposure to excessive microwave energy:

- Read all instructions before using the microwave oven.
- Read and follow the specific “PRECAUTIONS TO AVOID POSSIBLE EXPOSURE TO EXCESSIVE MICROWAVE ENERGY” found in this section.
- The microwave oven must be grounded. Connect only to properly grounded outlet. See “GROUNDING INSTRUCTIONS” found in this section and in the provided Installation Instructions.
- Use the microwave oven only for its intended use as described in the manual. Do not use corrosive chemicals or vapors in the microwave oven. This type of oven is specifically designed to heat, cook, or dry food. It is not designed for industrial or laboratory use.
- As with any appliance, close supervision is necessary when used by children.
- Do not operate the microwave oven if it has a damaged cord or plug, if it is not working properly, or if it has been damaged or dropped.
- The microwave oven should be serviced only by qualified service personnel. Call an authorized service company for examination, repair, or adjustment.
- Do not cover or block any openings on the microwave oven.
- Do not store this microwave oven outdoors. Do not use the microwave oven near water - for example, near a kitchen sink, in a wet basement, near a swimming pool, or similar locations.
- Do not immerse cord or plug in water.
- Keep cord away from heated surfaces.
- Do not let cord hang over edge of table or counter.
- See door surface cleaning instructions in the “Microwave Oven Maintenance and Care” section.
- Do not touch or clean the heating plate after toast cooking, it is very hot.
- Some products such as whole eggs in the shell and sealed containers - for example, closed glass jars - are able to explode and should not be heated in the microwave oven.
- Liquids, such as water, coffee, or tea are able to be overheated beyond the boiling point without appearing to be boiling. Visible bubbling or boiling when the container is removed from the microwave oven is not always present. THIS COULD RESULT IN VERY HOT LIQUIDS SUDDENLY BOILING OVER WHEN THE CONTAINER IS DISTURBED OR A SPOON OR OTHER UTENSIL IS INSERTED INTO THE LIQUID.

  To reduce the risk of injury to persons:

  – Do not overheat the liquid.

  – Stir the liquid both before and halfway through heating it.

  – Do not use straight-sided containers with narrow necks.

  – After heating, allow the container to stand in the microwave oven for a short time before removing the container.

  – Use extreme care when inserting a spoon or other utensil into the container.
- Do not mount over a sink.
- Do not store anything directly on top of the microwave oven when the microwave oven is in operation.
- Clean Ventilating Hoods Frequently - Grease should not be allowed to accumulate on hood or filter.
- When flaming foods under the hood, turn the fan on.
- Suitable for use above both gas and electric cooking equipment.
- Intended to be used above ranges with maximum width of 36" (91.44 cm).
- Use care when cleaning the vent-hood filter. Corrosive cleaning agents, such as lye-based oven cleaners, may damage the filter.

IMPORTANT SAFETY INSTRUCTIONS

- To reduce the risk of fire in the oven cavity:
  - Do not overcook food. Carefully attend the microwave oven when paper, plastic, or other combustible materials are placed inside the oven to facilitate cooking.
  - Remove wire twist-ties from paper or plastic bags before placing bags in oven.
  - If materials inside the oven ignite, keep oven door closed, turn oven off, and disconnect the power cord, or shut off power at the fuse or circuit breaker panel.
  - Do not use the cavity for storage purposes. Do not leave paper products, cooking utensils, or food in the cavity when not in use.

SAVE THESE INSTRUCTIONS

PRECAUTIONS TO AVOID POSSIBLE EXPOSURE TO EXCESSIVE MICROWAVE ENERGY

(a) Do not attempt to operate this oven with the door open since open-door operation can result in harmful exposure to microwave energy. It is important not to defeat or tamper with the safety interlocks.

(b) Do not place any object between the oven front face and the door or allow soil or cleaner residue to accumulate on sealing surfaces.

(c) Do not operate the oven if it is damaged. It is particularly important that the oven door close properly and that there is no damage to the:

(1) Door (bent),

(2) Hinges and latches (broken or loosened),

(3) Door seals and sealing surfaces.

(d) The oven should not be adjusted or repaired by anyone except properly qualified service personnel.

MICROWAVE OVEN MAINTENANCE AND CARE

General Cleaning

IMPORTANT: Before cleaning, make sure all controls are off and the microwave oven is cool. Always follow label instructions on cleaning products.

Soap, water, and a soft cloth or sponge are suggested first, unless otherwise noted.

STAINLESS STEEL AND BLACK STAINLESS STELL (on some models)

NOTE: To avoid damage to stainless steel surfaces, do not use soap-filled scouring pads, abrasive cleaners, Cooktop Cleaner, steel-wool pads, gritty washcloths, or abrasive paper towels. Damage may occur to stainless steel surfaces, even with one-time or limited use.

Rub in direction of grain to avoid damaging.

Cleaning Method:

- Affresh® Stainless Steel Cleaners Part Number W10355016 (not included) or Affresh® Stainless Steel Cleaning Wipes Part Number W1055049 (not included):
  See the Quick Start Guide for ordering information.
- Vinegar for hard water spots.

MICROWAVE OVEN DOOR EXTERIOR

Cleaning Method:

- Glass cleaner and a soft cloth or sponge: Apply glass cleaner to soft cloth or sponge, not directly on panel.
- Affresh® Kitchen Appliance Cleaners Part Number W10355010 (not included): See “Online Ordering Information” section from Quick Start Guide to order.

NONSTICK CAVITY COATING (on some models)

To avoid damage to the microwave oven cavity, do not use metal or sharp utensils or scrapers or any type of abrasive cleanser or scrubbers.

MICROWAVE OVEN CAVITY

To avoid damage to microwave oven cavity, do not use soap-filled scouring pads, abrasive cleaners, steel-wool pads, gritty washcloths, or some paper towels.

On stainless steel models, rub in direction of grain to avoid damaging.

The area where the microwave oven door and frame touch when closed should be kept clean.

Cleaning Method:

Average soil

- Mild, nonabrasive soaps and detergents:
  Rinse with clean water and dry with soft, lint-free cloth.

Heavy soil

- Mild, nonabrasive soaps and detergents:
  Heat 1 cup (250 mL) of water for 2 to 5 minutes in microwave oven. Steam will soften soil. Rinse with clean water and dry with soft, lint-free cloth.

Odors

- Lemon juice or vinegar:
  Heat 1 cup (250 mL) of water with 1 tbs (15 mL) of either lemon juice or vinegar for 2 to 5 minutes in microwave oven.

Rack (on some models)

- Steel-wool pad
- Dishwasher

GREASE FILTERS

- Mild cleanser and scouring pad
- Dishwasher

Toast Pan (on some models)

- Mild cleanser and scouring pad
- Dishwasher

AirFry Basket (on some models)

- Steel-wool pad
- Dishwasher

IR Sensor Len (on some models)

- Lens cleaner and Lint Free Swab

The IR sensor is located on the right-side of the cavity top. Clean it when the display shows “clean the IR”.
Instruction:
TBC

Heating Plate (on some models)

The Heating Plate is located on the cavity floor. It is very hot after cooking, do not touch or clean it until it is cooled.

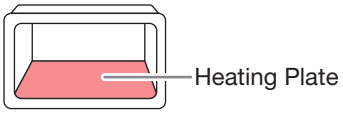

- Glass cleaner and a soft cloth or sponge: Apply glass cleaner to soft cloth or sponge, not directly on the floor.

INSTALLATION REQUIREMENTS

Tools and Parts

Tools Needed

- Measuring tape
- Pencil
- Scissors
- Masking tape or thumbtacks
- Drill
- No. 2 Phillips screwdriver
- Stud finder
- No. 3 Phillips screwdriver for 1/4 - 20 x 3" (7.6 cm) bolts
- 3/16" (5 mm), 3/8" (1 cm), 5/8" (1.6 cm) drill bits
- 3/4" (1.9 cm) hole saw
- Keyhole saw
- Diagonal wire cutting pliers
- 7/16" (1.1 cm) socket wrench (or box wrench) for 1/4" x 2" (6.4 mm x 5.1 cm) lag screws
- 1½" (3.8 cm) diam. hole drill bit for wood or metal cabinet
- Caulking gun and weatherproof caulking compound
- Duct tape

Parts Needed

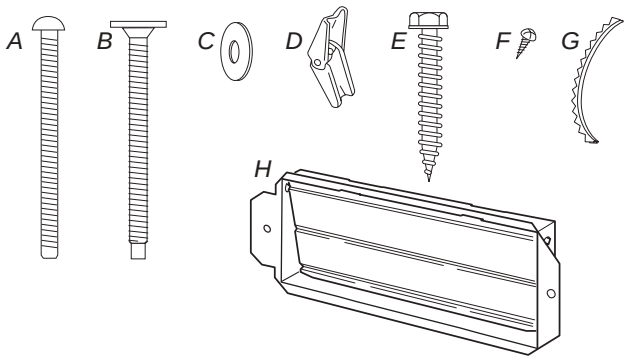

A. 3/16 - 24 x 3" round-head bolts (2)
B. 1/4 - 20 x 3" flat-head bolts (2)
C. Washers (2)
D. 3/16" toggle nuts (2)
E. 1/4" x 2" lag screws (2)
F. #6 x 3/8" Sheet metal screws (2)
G. Power supply cord bushing (1)
H. Damper assembly (for wall or roof venting)

***Not Shown*:**

- *Mounting plate*

Check local codes. Check existing electrical supply. See “Electrical Requirements”.
It is recommended that all electrical connections be made by a licensed, qualified electrical installer.

Note:

- The hardware items listed here are for wood studs. For other types of wall structures, be sure to use appropriate fasteners.
- Be sure to purchase only whirlpool factory-certified parts and accessories for your appliance. Your installation may require additional parts. To order, see the “Online Ordering Information” section of the Quick Start Guide.

Materials Needed

- Standard fittings for wall or roof venting. See the “Venting Design Specifications” section.

Location Requirements

Check the opening where the microwave oven will be installed. The location must provide:

- Minimum installation dimensions. See the “Installation Dimensions” illustration.
- Minimum one 2" x 4" (5.1 x 10.2 cm) wood wall stud and minimum 3/8" (1 cm) thickness drywall or plaster/lath within cabinet opening.
- Support for weight of 150 lbs (68 kg) which includes microwave oven and items placed inside the microwave oven and upper cabinet.
- Grounded electrical outlet inside upper cabinet. See the “Electrical Requirements” section.

NOTES:

- If installing the microwave oven near a left sidewall, make sure there is at least 6" (15.2 cm) of clearance between the wall and the microwave oven so that the door can open fully.
- Some models have a pocket handle. If installing the microwave near a right side wall, make sure there is at least 3 inches of clearance between wall and microwave oven so you can grab the handle integrated inside the door.
- Some cabinet and building materials are not designed to withstand the heat produced by the microwave oven for cooking. Check with your builder or cabinet supplier to make sure that the materials used will not discolor, delaminate, or sustain other damages.

Special Requirements

For Wall Venting Installation Only:

- Cutout must be free of any obstructions so that the vent fit properly and the damper blade opens freely and fully.

For Roof Venting Installation Only:

- If you are using a rectangular-to-round transition piece, the 3" (7.6 cm) clearance needs to exist above the microwave oven so that the damper blade can open freely and fully. See “Rectangular to Round Transition” illustration in the “Venting Design Specifications” section.

Installation Dimensions

NOTE: The grounded 3 prong outlet must be inside the upper cabinet. See the “Electrical Requirements” section.

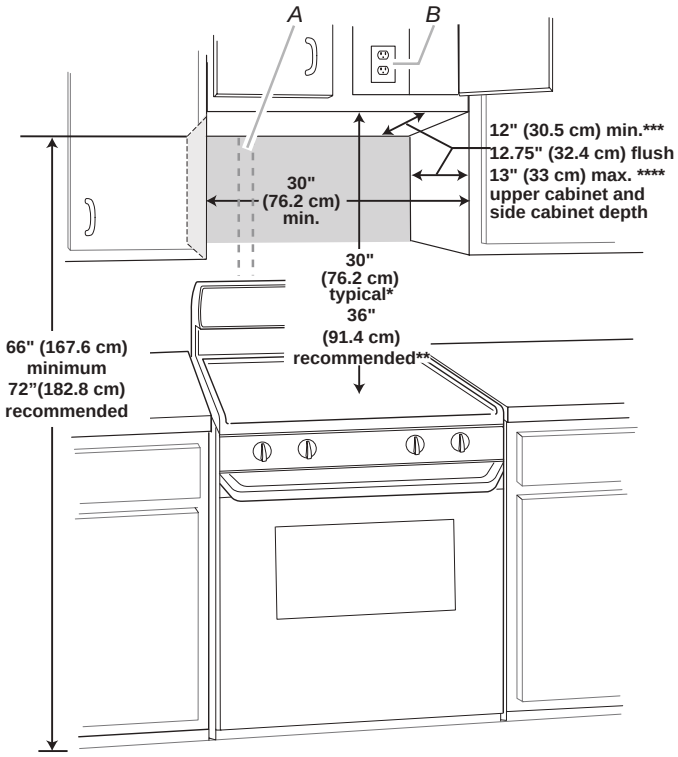

A. 2" x 4" (5.1 x 10.2 cm) wall stud
B. Grounded 3 prong outlet

*30" (76.2 cm) is typical for 66" (167.6 cm) installation height. Exact dimensions may vary depending on type of range/cooktop below.

** 36" (91.4 cm) is recommended for 72" (182.8 cm) installation height.

*** for the minimum 12" (30.5 cm) cabinets, the door is not flush with the cabinet outside.

**** for 13" (33 cm) cabinets, needs a special nail for installation, see xxx section.

Note: If cabinets are deeper than 13" (33 cm), use the bump out mounting kit replacing the mounting plate from the wall. The bump out mounting kit (part# W12345678) is not provided. To order, see the “Online Ordering Information” section of the Quick Start Guide.

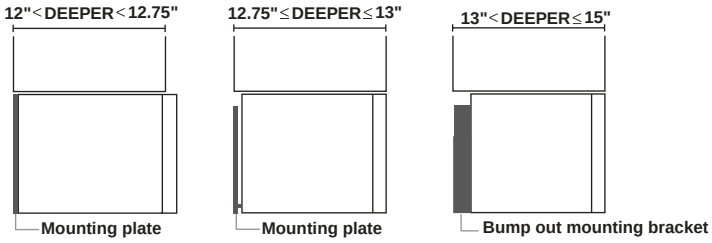

Electrical Requirements

⚠WARNING

Electrical Shock Hazard

Plug into a grounded 3 prong outlet.

Do not remove ground prong.

Do not use an adapter.

Do not use an extension cord.

Failure to follow these instructions can result in death, fire, or electrical shock.

Observe all governing codes and ordinances.

Required:

- A 120 V, 60 Hz, AC only, 15 or 20 A electrical supply with a fuse or circuit breaker

Recommended:

- A time-delay fuse or time-delay circuit breaker
- A separate circuit serving only this microwave oven

GROUNDING INSTRUCTIONS

- **For all cord connected appliances:**
  The microwave oven must be grounded. In the event of an electrical short circuit, grounding reduces the risk of electric shock by providing an escape wire for the electric current. The microwave oven is equipped with a cord having a grounding wire with a grounding plug. The plug must be plugged into an outlet that is properly installed and grounded.

WARNING: Improper use of the grounding plug can result in a risk of electric shock. Consult a qualified electrician or serviceman if the grounding instructions are not completely understood, or if doubt exists as to whether the microwave oven is properly grounded.

Do not use an extension cord. If the power supply cord is too short, have a qualified electrician or serviceman install an outlet near the microwave oven.

SAVE THESE INSTRUCTIONS

This device complies with Part 18 of the FCC Rules.

INSTALLATION INSTRUCTIONS

Prepare Microwave Oven Hood Combination

⚠WARNING

Excessive Weight Hazard

Use two or more people to move and install microwave oven.

Failure to do so can result in back or other injury.

1. To avoid possible damage to the work surface, cover the work surface.
2. Remember to remove mounting plate from the foam packing.
3. Remove the hardware package from the foam packing.
4. Remove the damper assembly from the foam packing.
5. Remove the literature pack from the foam packing.
6. Remove rack from the foam packing (on some models).
7. Remove shipping materials, tape and film from microwave.
8. Remove and set aside crisp plate, crisp handle or grill rack from inside form packing of the microwave oven cavity (on some models).
9. Tape the microwave oven door closed so that the door does not swing open while the microwave oven is being handled.

NOTE: To avoid damage to the microwave oven, do not grip or use the door or door handle while the microwave oven is being handled.

Installation Types

This microwave oven is designed for adaptation to the following three types of ventilation, choose one type before installation.

Recirculation Installation (Factory Default Setting)

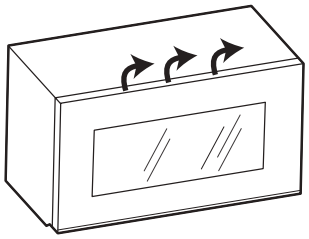

Wall Venting Installation

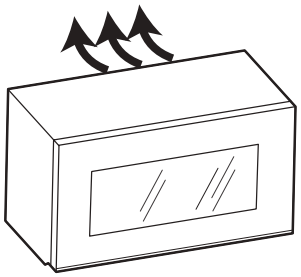

Roof Venting Installation

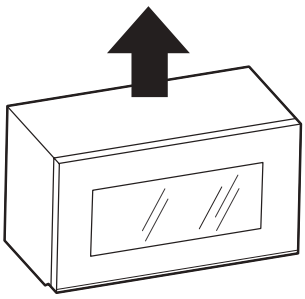

Reciculation Installation

The microwave oven is set for recirculation installation. Install the microwave oven as following the sections.

Note: Keep the damper assembly in case the venting method is changed, or the microwave is reinstalled in another location where wall or roof venting may be used.

Find The Wall Stud(s)

NOTE: If no wall studs exist within the cabinet opening, do not install the microwave oven.

See illustrations in “Possible Wall Stud Configurations.”

1. Using a stud finder, locate the edges of the wall stud(s) within the opening.
2. Mark the center of each stud, and draw a plumb line down each stud center. See illustrations in “Possible Wall Stud Configurations.”

Possible Wall Stud Configurations

These depictions show examples of preferred installation configurations with the mounting plate.

No Wall Studs at End Holes
Figure 1

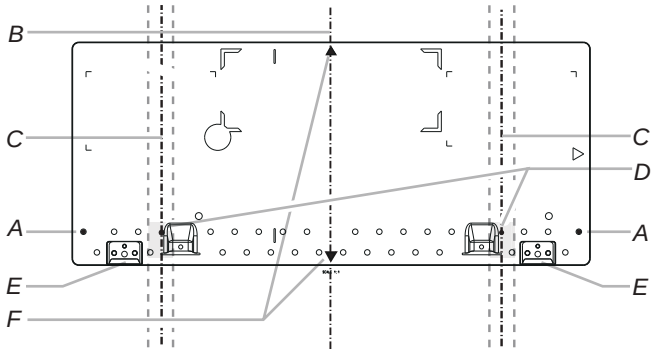

No Wall Studs at End Holes
Figure 2

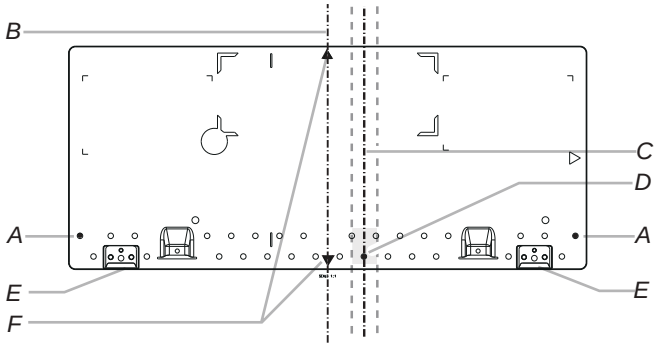

NOTE: If wall stud is within 6" (15.2 cm) of the vertical centerline, only recirculation or roof venting installation can be done.

A. End holes (on mounting plate)
B. Cabinet opening vertical centerline
C. Wall stud centerlines
D. Holes for lag screws
E. Support tabs
F. Mounting plate center markers

Wall Stud at End Hole
Figure 3

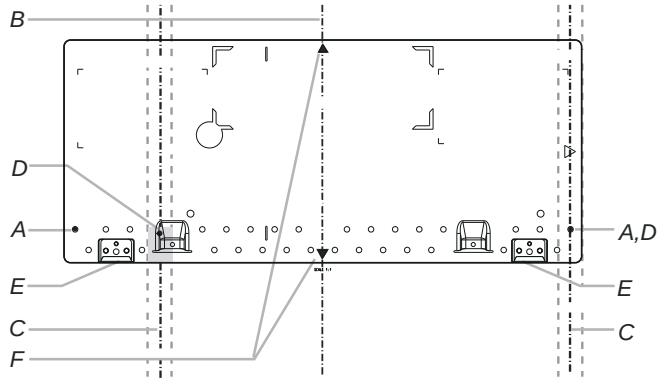

Wall Studs at End Holes
Figure 4

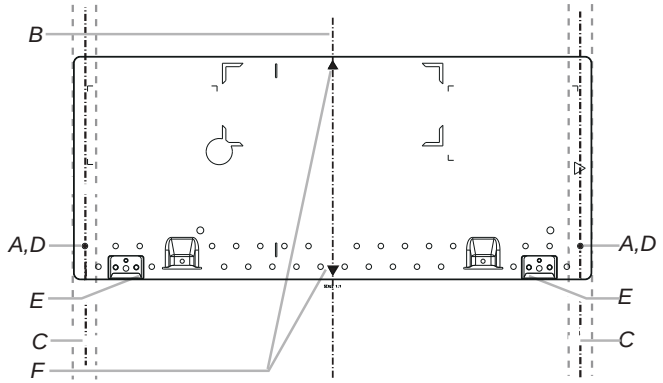

A. End holes (on mounting plate)
B. Cabinet opening vertical centerline
C. Wall stud centerlines
D. Holes for lag screws
E. Support tabs
F. Mounting plate center markers

Mark Upper Cabinet

1. Using measuring tape, find and clearly mark the vertical centerline of the opening. Make sure it is align with the vertical wall centerline.

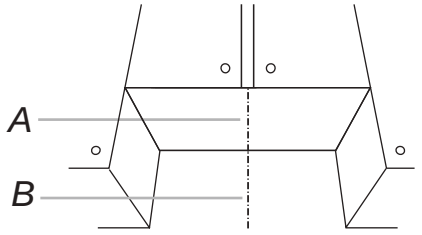

A. Upper Cabinet Centerline
B. Wall Centerline

Note: The metal mounting plate is fit for depth of 12” to 12.75” cabinet installation, but need some adjustment for for different depth. See the following steps 2a, 2b. For cabinet depth of 12.75“ to 13”, follow the step 2c.

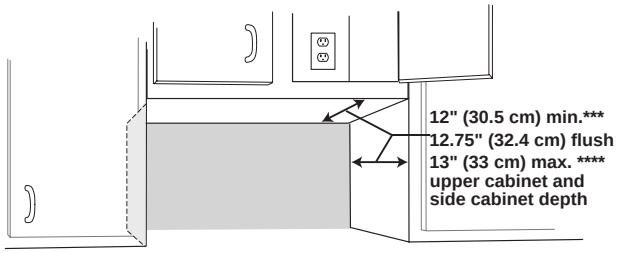

If you cabinet is 12.75” depth, follow the step 2a:

2a. Place the mounting plate against the bottom of the upper cabinet.
NOTE:
- Make sure the front edge of the mouting plate align with the front edge of upper cabinet.
- Make sure the center marks on the mounting plate align with the upper cabinet centerline which draw in step 1.
- Make sure the mounting plate hooks is facing out and down.

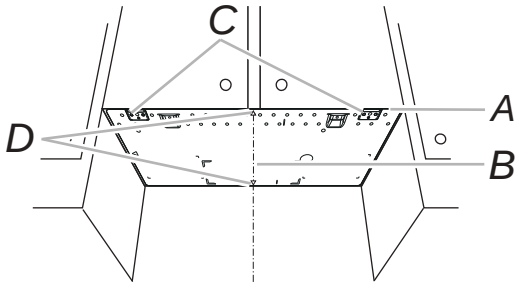

A. Front Edge of Mounting Plate & Front Edge of Upper Cabinet
B. Upper Cabinet Centerline
C. Mounting Plate Hooks
D. Center Marks on Mounting Plate

If you cabinet is 12” to 12.75” depth, follow the step 2b:

2b. Place the mounting plate against the bottom of the upper cabinet.
NOTE:
- Make sure the front edge of the mounting plate align with the back edge of upper cabinet.
- Make sure the center marks on the mounting plate align with the upper cabinet centerline which draw in step 1.
- Make sure the mounting plate hooks is facing out and down.

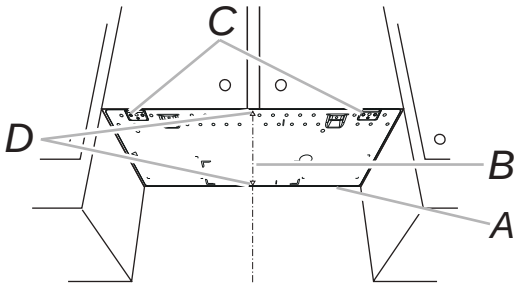

A. Front Edge of Mounting Plate & Front Edge of Upper Cabinet
B. Upper Cabinet Centerline
C. Mounting Plate Hooks
D. Center Marks on Mounting Plate

If you cabinet is 12.75” to 13” depth, use the bump out mounting plate replacing the mounting plate from the wall. The bump out mounting plate (part # Wxxxxxxx) is not provided but can be purchased from Whirlpool. Refer to the QSG in “Online ordering information” section or the ordering, then follow the step 2c:

2c. Place the mounting plate against the bottom of the upper cabinet.
NOTE:
- Make sure the front edge of the mounting plate align with the front edge of upper cabinet.
- Make sure the center marks on the mounting plate align with the upper cabinet centerline which draw in step 1.
- Make sure the mounting plate hooks is facing out and down.

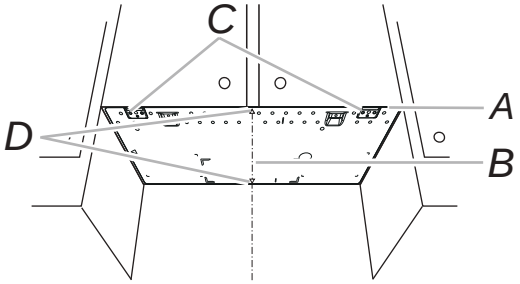

A. Front Edge of Bump Out Mounting Plate & Front Edge of Upper Cabinet
B. Upper Cabinet Centerline
C. Mounting Plate Hooks
D. Center Marks on Mounting Plate

3. Using a pencil to mark a power cord hole and two mounting nut holes.

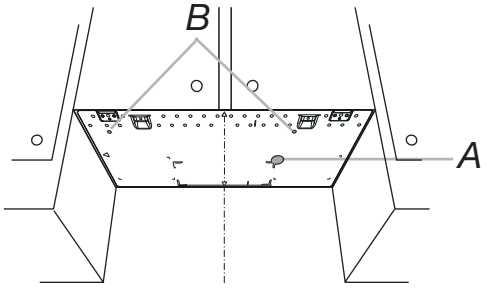

A. Power Cord Hole
B. Mounting Nut Holes

4. Using a pencil to mark a upper cabinet hole. this step can be skipped if your unit is using recirculation or wall venting installation.

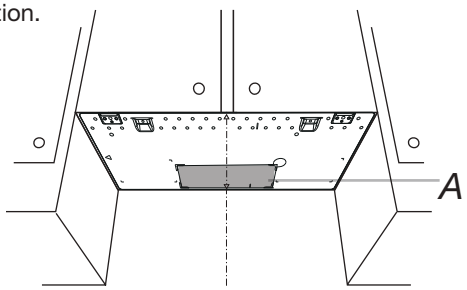

A. Upper Cabinet Hole

Mark Rear Wall

The microwave oven must be installed on a minimum of 1 wall stud, preferably 2, using a minimum of 1 lag screw, preferably 2. see “Find The Wall Stud(s)” section for find the wall studs.

1. Using measuring tape, find and clearly mark the vertical centerline of the opening.

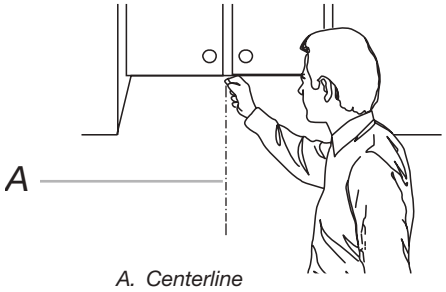

A. Centerline

2. Align the center markers on the mounting plate, to the centerline on the wall, making sure it is level, and that the top of the mounting template is butted up against the bottom edge of the upper cabinet.
Using a pencil to mark the wall venting hole(floor wall venting installation only), skip it if your unit is for recirculation or wall venting installation.

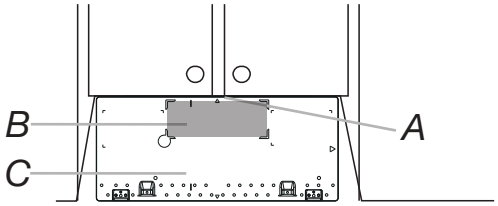

A. Edge of Upper Cabinet
B. Wall Venting Hole
C. Mounting Plate

NOTES:

- If the front edge of the upper cabinet is lower than the back edge, lower the mounting template so that its top is level with the front edge of the cabinet.

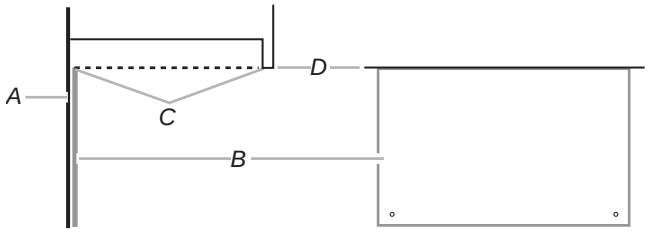

A. Rear wall
B. Mounting plate
C. Top of mounting plate must align with front edge of cabinet.
D. Front edge of upper cabinet

3. Vertical the mounting plate, holding the mounting plate in place. Align the side center mark on the mounting plate over the vertical centerline draw in step 1. Made sure the mounting plate is level, and that the top of the mounting template is butted up against the bottom edge of the upper cabinet.

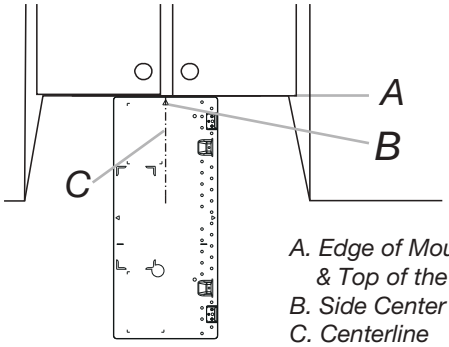

A. Edge of Mounting Plate
& Top of the mounting plate
B. Side Center Mark
C. Centerline

4. Finding and drawing two small lines through the two mounting plate bottom position lines.

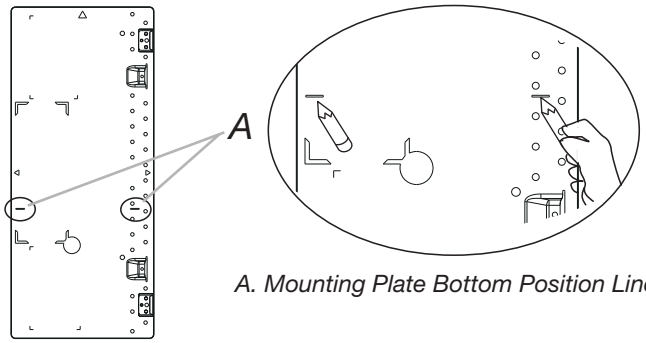

A. Mounting Plate Bottom Position Line

5. Using the bottom edge of the mounting plate accorss the two small lines, draw a mouting plate bottom line.

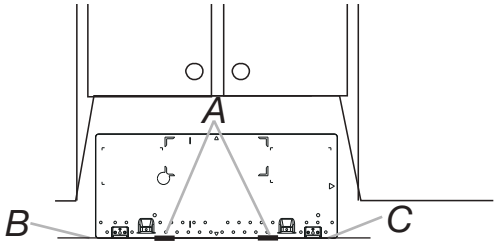

A. Two Small Lines
B. Mouting Plate Bottom Line
C. Bottom Edge of Mounting Plate

Drill Holes in Rear Wall and Upper Cabinet

1. Using a drill, cut out the power cord hole cutout area and the two mounting nut holes. This step is for all venting installations.

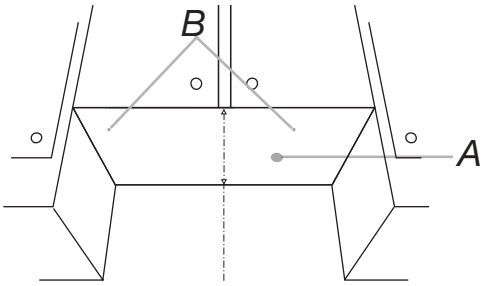

A. Power Cord Hole
B. Mounting Nut Holes

NOTE: If upper cabinet is metal, the supply cord bushing needs to be installed around the supply cord hole as shown.

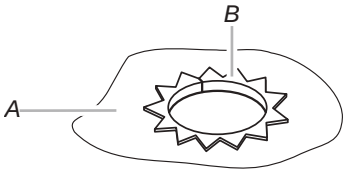

A. Metal cabinet
B. Power supply cord bushing

2. Drill 3/8" (10 mm) holes at points “D” and “E” on the template. These are for two 1/4-20 x 3" bolts and washers used to secure the microwave oven to the upper cabinet.

Wall Venting Installation Only

Using a keyhole saw, cut out the retangular wall venting cutout area.

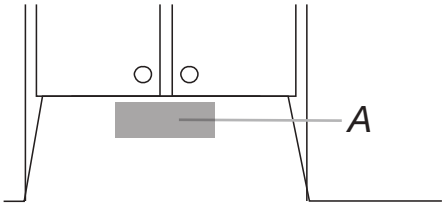

A. Wall Venting Area

Roof Venting Installation Only

Using a keyhole saw, cut out the retangular roof venting cutout area.

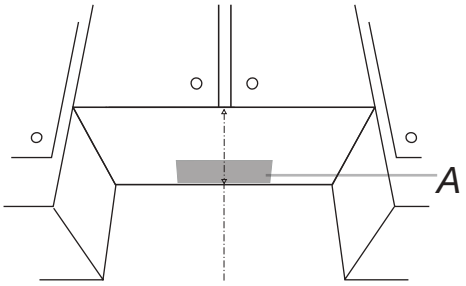

A. Upper Cabinet Area

Drill Holes in Rear Wall

In addition to being installed on at least 1 wall stud, the mounting plate must attach to the wall at both end holes. If the end holes are not over wall studs, use two 3/16-24 x 3" round head bolts with toggle nuts; if 1 end hole is over a wall stud, use 1 lag screw and one 3/16-24 x 3" round-head bolt with toggle nut; or if both end holes are over wall studs, use 2 lag screws. Following are 3 installation configurations.

Installation for No Wall Studs at End Holes (Figures 1 and 2)

1. Drill 5/8" (1.6 cm) holes through the wall at both end holes marked in Step 3 of the “Mark Rear Wall.”
2. Drill 3/16" (5 mm) hole(s) into the wall stud(s) at the hole(s) marked in Step 6 of the “Mark Rear Wall.” Refer to figures 1 and 2 in “Possible Wall Stud Configurations” in the“Locate Wall Stud(s)” section.

Installation for Wall Stud at One End Hole (Figure 3)

1. Drill a 3/16" (5 mm) hole into the wall stud at the end hole marked in Step 3 of the “Mark Rear Wall.”
2. If installing on a second wall stud, drill a 3/16" (5 mm) hole into the wall stud at the other hole marked in Step 6 of the“Mark Rear Wall.” Refer to Figure 3 in “Possible Wall Stud Configurations” in the “Locate all Stud(s)” section.
3. Drill a 5/8" (1.6 cm) hole through the wall at the other end hole.

Installation for Wall Studs at Both End Holes (Figure 4)

1. Drill 3/16" (5 mm) holes into the studs at the end holes marked in Step 3 of the “Mark Rear Wall.”

Attach Mounting Plate to Wall

1. Placing the mounting plate against the wall, make sure the center mark align with the vertical wall centerline, and make sure the mounting plate bottom edge align with the mounting plate bottom line.
2. Secure the mounting plate to the wall at both end holes drilled into the wall studs and/or drywall using either 3/16-24 x 3" round-head bolts and toggle nuts or 1/4 x 2" lag screws.

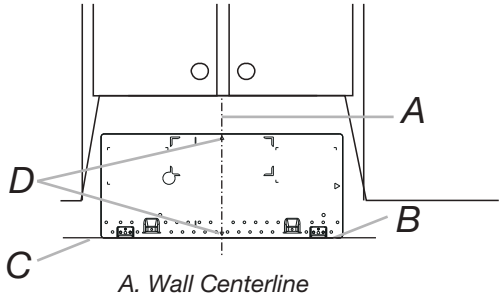

A. Wall Centerline
B. Bottom Edge of Mounting Plate
C. Mouting Plate Bottom Line
D. Center Mark

Refer to illustrations in “Possible Wall Stud Configurations” in the “Locate Wall Stud(s)” section.

No Wall Studs at End Holes (Figures 1 and 2)

NOTE: The mounting plate must be secured to the wall on at least 1 wall stud as well as at both ends.

1. With the support tabs of the mounting plate facing forward, insert 3/16-24 x 3" round-head bolts through both end holes of mounting plate.

2. Start toggle nuts on bolts from the back of the mounting plate. Leave enough space for the toggle nuts to go through the wall and to open.

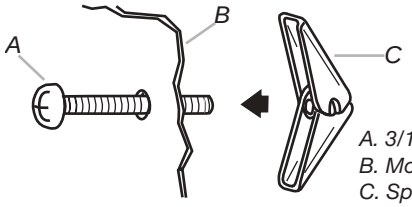

A. 3/16-24 x 3" round-head bolt
B. Mounting plate
C. Spring toggle nut

3. Position mounting plate on the wall.
4. Push the 2 bolts with toggle nuts through the drywall, and finger tighten the bolts to make sure toggle nuts have opened against drywall.

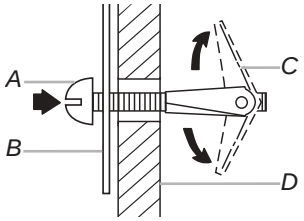

A. 3/16-24 x 3" round-head bolt
B. Mounting plate
C. Spring toggle nut
D. Drywall

5. Insert lag screw(s) into the hole(s) drilled into wall stud(s) in Step 2 of “Installation for No Wall Studs at End Holes” in the “Drill Holes in Rear Wall” section.
6. Check alignment of mounting plate, making sure it is level.
7. Securely tighten all lag screws and bolts.

Wall Stud at One End Hole (Figure 3)

1. With the support tabs of the mounting plate facing forward, insert a 3/16-24 x 3" round-head bolt through the end hole that fits over the 5/8" (16 mm) hole drilled in Step 3 of “Installation for Wall Stud at One End Hole” in the “Drill Holes in Rear Wall” section.
2. Start a toggle nut on the bolt from the back of the mounting plate. Leave enough space for the toggle nut to go through the wall and to open.
3. Position mounting plate on the wall.
4. Push the bolt with toggle nut through the drywall, and finger tighten the bolt to make sure toggle nut has opened against drywall.
5. Insert a lag screw into the remaining end hole.
6. If installing on a second wall stud, insert a lag screw into the other hole drilled in Step 2 of “Installation for Wall Stud at One End Hole” in the “Drill Holes in Rear Wall” section.
7. Check alignment of mounting plate, making sure it is level.
8. Securely tighten the lag screw(s) and bolt.

Wall Studs at Both End Holes (Figure 4)

1. Position mounting plate on the wall.
2. Insert lag screws into both end holes.
3. Check alignment of mounting plate, making sure it is level.
4. Securely tighten the lag screws.

Install the Microwave Oven

⚠WARNING

Excessive Weight Hazard

Use two or more people to move and install microwave oven.

Failure to do so can result in back or other injury.

IMPORTANT: The control side of the microwave oven is the heavy side. Handle the microwave oven gently.

1. Place a washer on each 1/4-20 x 3" flat-head bolt and place inside upper cabinet near the 3/8" (10 mm) holes.
2. Make sure the microwave oven door is closed and taped shut.

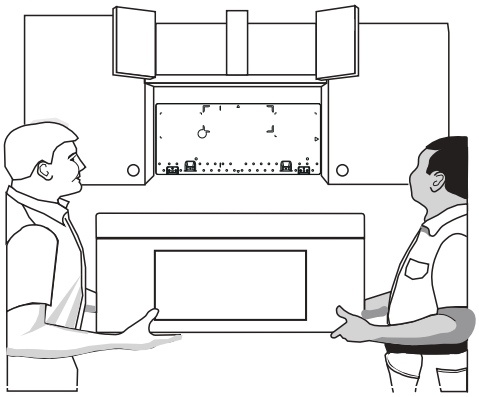

3. Using 2 or more people, lift microwave oven and hang it on support tabs at the bottom of mounting plate.

NOTE: To avoid damage to the microwave oven, do not grip or use the door or while the microwave oven is being handled.

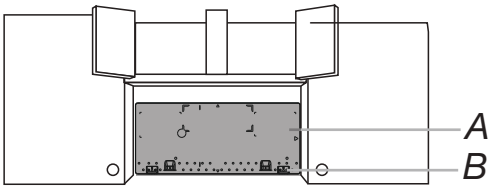

A. Mounting plate
B. Support tabs

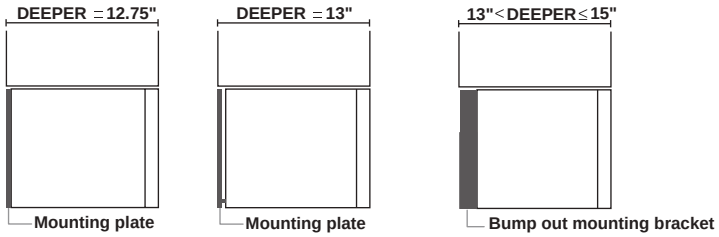

4. With front of microwave oven still tilted, thread power supply cord through the power supply cord hole in the bottom of the upper cabinet.

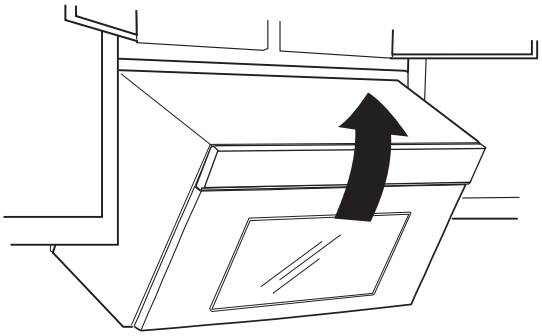

5. Rotate microwave oven up toward upper cabinet.

NOTE: If venting through the wall, make sure the damper assembly fits easily into the vent in the wall cutout.

6. Push microwave oven against mounting plate and hold in place.

NOTE: If microwave oven does not need to be adjusted, skip steps 6 through 8.

7. If adjustment is required, rotate microwave oven downward. Using 2 or more people, lift microwave oven off of mounting plate, and set aside on a covered surface.
8. Loosen mounting plate screws. Adjust mounting plate and retighten screws.
9. Repeat steps 3 through 6.
10. With the microwave oven centered, and with at least one person holding it in place, insert bolts through upper cabinet into microwave oven. Tighten bolts until there is no gap between upper cabinet and microwave oven.

NOTES:

- Some upper cabinets may require bolts longer or shorter than 3" (7.6 cm). Longer or shorter bolts are available at most hardware stores.
- Overtightening bolts may warp the top of the microwave oven. To avoid warping, wood filler blocks (installer to provide) may be added. The blocks must be the same thickness as the space between the upper cabinet bottom and the microwave oven.

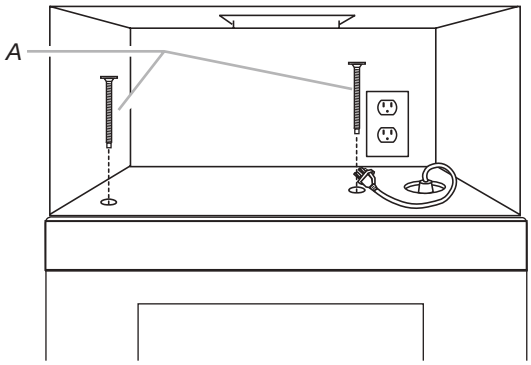

A. Bolts

NOTE: Avoid damage to the mounting nut, screw the bolts into the mounting nut holes around 15-20 mm by hand first, make sure the bolts thread in properly. Then tighten with tools.

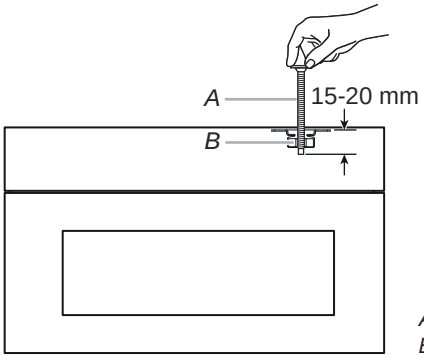

A. Bolt
B. Mounting Nut

2. Connect vent to damper assembly.

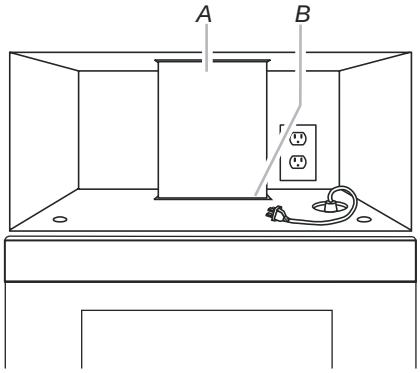

A. Vent
B. Damper assembly (under vent)

Complete Installation

1. Check that all parts are now installed. If there is an extra part, go back through the steps to see which step was skipped.
2. Dispose of/recycle all packaging materials.

⚠WARNING

Electrical Shock Hazard

Plug into a grounded 3 prong outlet.

Do not remove ground prong.

Do not use an adapter.

Do not use an extension cord.

Failure to follow these instructions can result in death, fire, or electrical shock.

3. Plug microwave oven into grounded 3 prong outlet.
4. Reconnect power.
5. Check the operation of microwave oven by placing 1 cup (250 mL) of water on the cavity and programming a cook time of 1 minute at 100% power. Test vent fan and exhaust by operating the vent fan.
6. Check the vent door if auto open (in some models).

7. If the microwave oven does not operate:
   - Check that a household fuse has not blown, or that a circuit breaker has not tripped. Replace the fuse or reset the circuit breaker. If the problem continues, call an electrician.
   - Check that the power supply cord is plugged into a grounded 3 prong outlet.
   - See the User Instructions for troubleshooting information.

The installation is now complete.

Save Installation Instructions for future use.

Wall Venting Installation

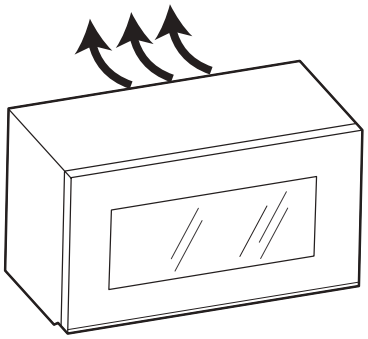

Install the microwave for wall venting as following steps:

a. Find the wall stud(s), refer to the “Find The Wall Stud(s)” section.
b. Mark rear wall, refer to the “Mark Rear Wall” section.
c. Drill holes in rear wall, refer to the “Drill Holes in Rear Wall” section.
d. Attach mounting plate to wall, refer to the “Attach Mounting Plate to Wall” section.
e. Prepare upper cabinet, refer to the “Prepare Upper Cabinet” section.
f. Rotate blower motor as the following “Rotate Blower Motor for Wall Venting Installation” section.
i. Install damper assembly as the folloing “Install Damper Assembly” section.
j. Install the microwave oven, refer to the “Install the Microwave Oven” section.
k. Install grease filter and check that all parts are installed, refer to “Complete Installation” section.

Rotate Blower Motor for Wall Venting Installation

1. Remove screws attaching damper plate to back of microwave oven, set the screws aside.

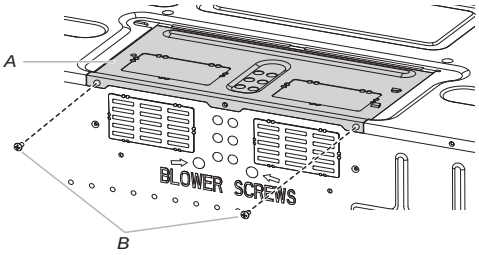

A. Damper plate
B. Screws

2. Turn and hold the damper plate vertically as shown.

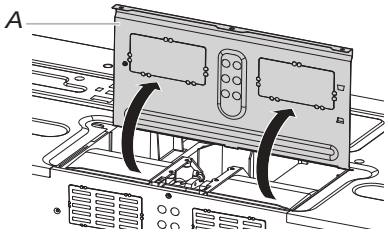

A. Damper plate

3. Remove 2 blower screws attaching blower motor to the microwave oven, and set aside.

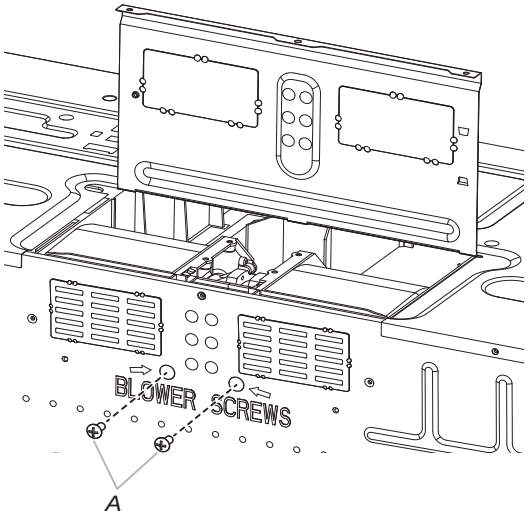

A. Blower screws (in recessed holes)

4. Disconnect the blower motor wire from the connector.

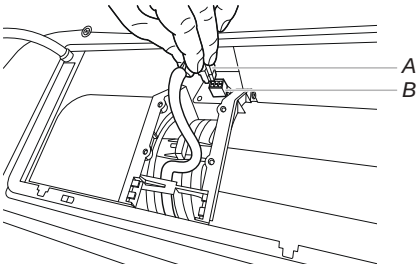

A. Blower motor wire
B. Connector

5. Lift blower motor out of microwave oven, and set aside.

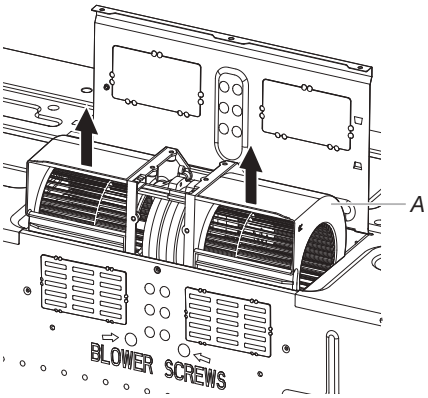

A. Blower Motor

6. Using diagonal wire cutting pliers, gently snip out the rectangular damper vent covers at the perforations.

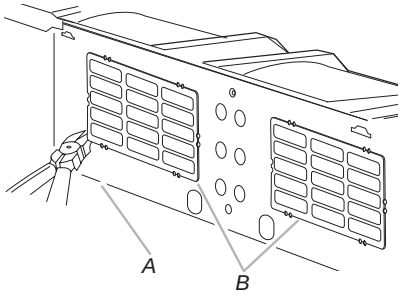

A. Diagonal wire cutting pliers
B. Rectangular damper vent cover

7. Hold the blower motor wire, put the wire through the blower motor bridge.

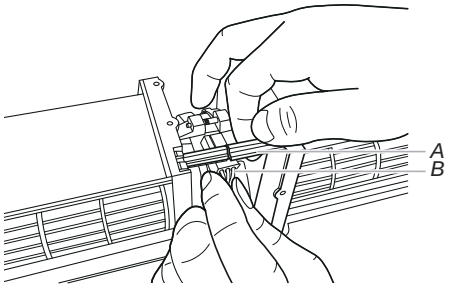

A. Blower motor bridge
B. Blower motor wire

8. Lower blower motor back into the microwave oven. Exhaust ports face the back of the microwave oven.

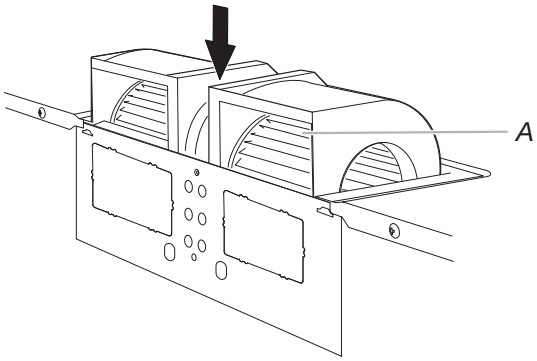

A. Exhaust Port

9. Reconnect the blower motor wire into the connector.

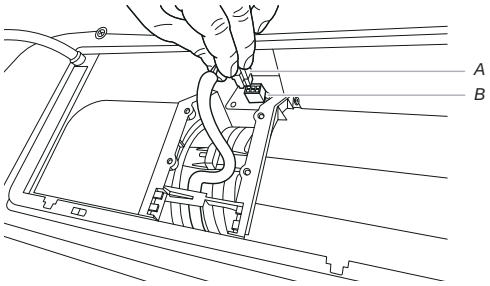

A. Blower motor wire
B. Connector

10. Reattach the 2 blower screws into the recessed holes in the back of the microwave.

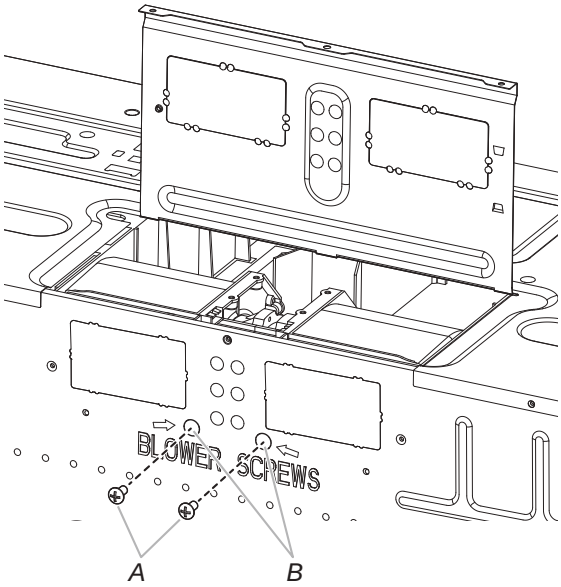

A. Screws
B. Recessed holes

11. Check to make sure the 2 screws are secured properly in the blower motor screw holes, so that the motor cannot move.

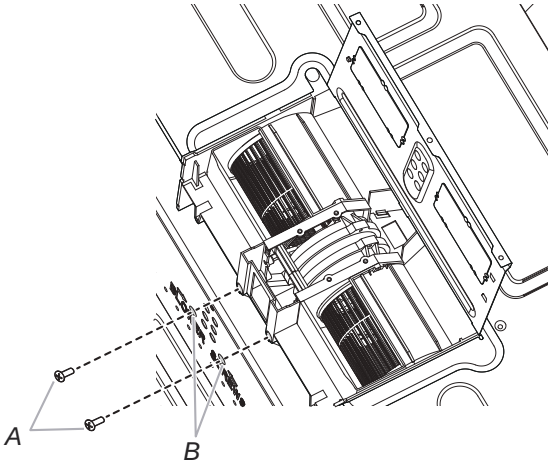

A. Screws
B. Blower motor screw holes

12. Return the damper plate to its original horizontal position.

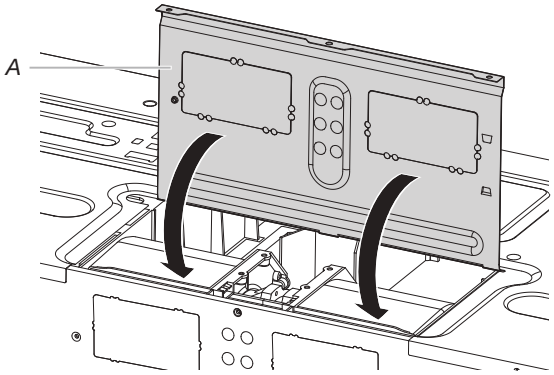

A. Damper plate

13. Secure damper plate with 2 screws removed in Step 1.

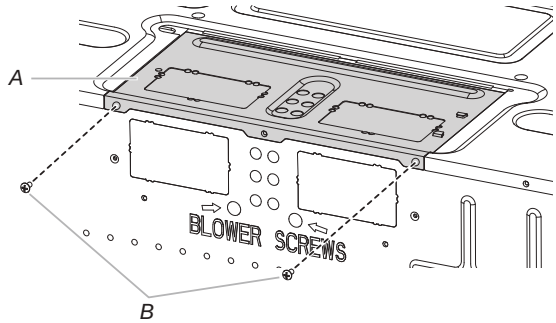

A. Damper plate
B. Screws

⚠WARNING

Electrical Shock Hazard

Plug into a grounded 3 prong outlet.

Do not remove ground prong.

Do not use an adapter.

Do not use an extension cord.

Failure to follow these instructions can result in death, fire, or electrical shock.

14. Plug in the microwave oven. Check if the vent fan runs with abnormal sounds, go back through the steps to see which step was skipped.

Install Damper Assembly for Wall Venting Installation

1. Check that damper blade moves freely and opens fully.

2. Position the damper assembly on the back of the microwave oven so that the damper blade hinge is at the top, and the damper blade opens away from the microwave oven.

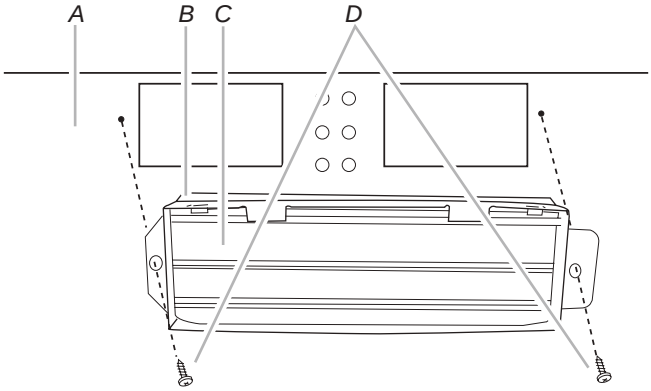

A. Back of microwave oven
B. Damper assembly
C. Damper blade
D. #6 x 3/8" Sheet metal screws

3. Secure damper assembly with 2 #6 x 3/8" sheet metal screws.

Roof Venting Installation

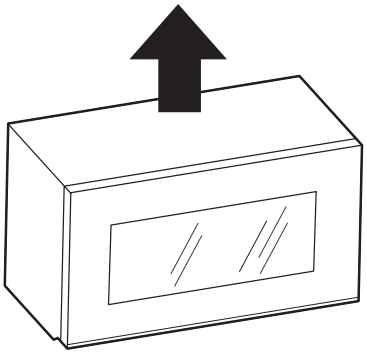

Install the microwave for roof venting as following steps:

1. Find the wall stud(s), refer to the “Find The Wall Stud(s)” section.
2. Mark rear wall, refer to the “Mark Rear Wall” section.
3. Drill holes in rear wall, refer to the “Drill Holes in Rear Wall” section.
4. Attach mounting plate to wall, refer to the “Attach Mounting Plate to Wall” section.
5. Prepare upper cabinet, refer to the “Prepare Upper Cabinet” section.
6. Rotate blower motor as the following “Rotate Blower Motor for Roof Venting Installation” section.
7. Install damper assembly as the folloing “Install Damper Assembly” section.
8. Install the microwave oven, refer to the “Install the Microwave Oven” section.
9. Install grease filter and check that all parts are installed, refer to “Complete Installation” section.

Rotate Blower Motor for Roof Venting Installation

1. Remove screws attaching damper plate to back of microwave oven, set the screws aside.

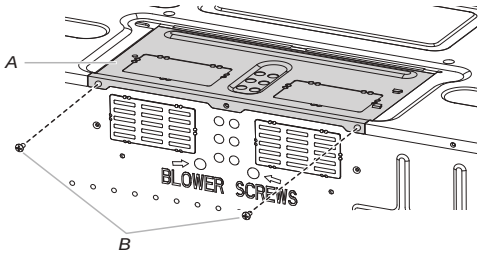

A. Damper plate
B. Screws

2. Turn and hold the damper plate vertically as shown.

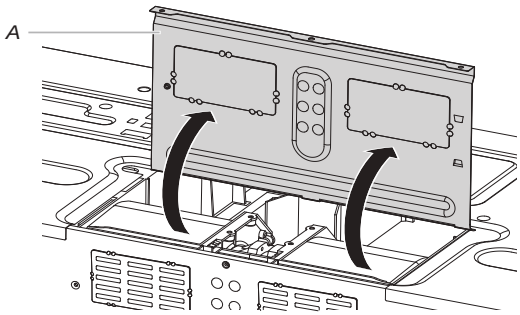

A. Damper plate

3. Remove 2 blower screws attaching blower motor to the microwave oven, and set aside.

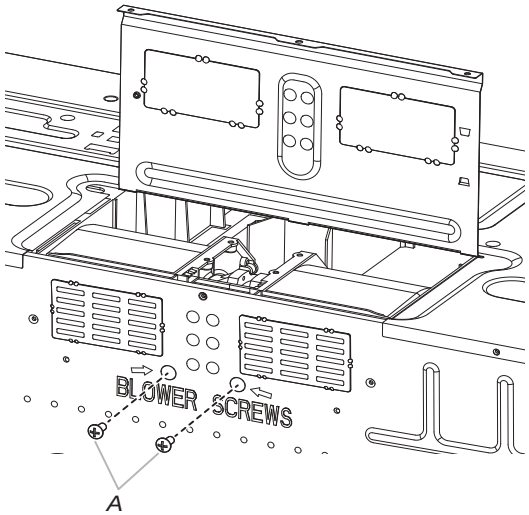

A. Blower screws (in recessed holes)

4. Disconnect the blower motor wire from the connector.

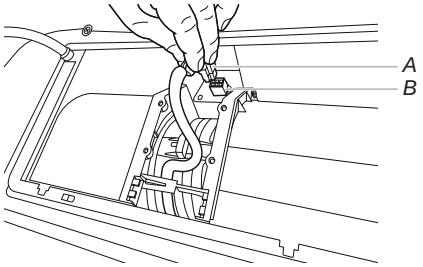

A. Blower motor wire
B. Connector

5. Lift blower motor out of microwave oven, and set aside.

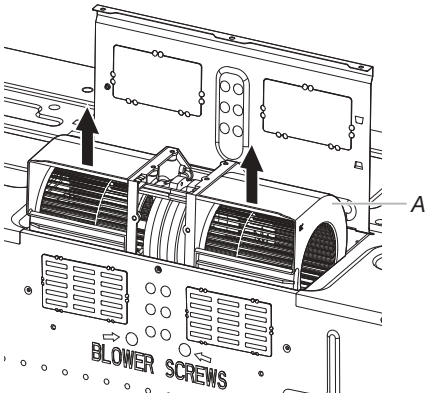

A. Blower Motor

6. Using diagonal wire cutting pliers, gently snip out the rectangular vent covers on the damper plate at the perforations.

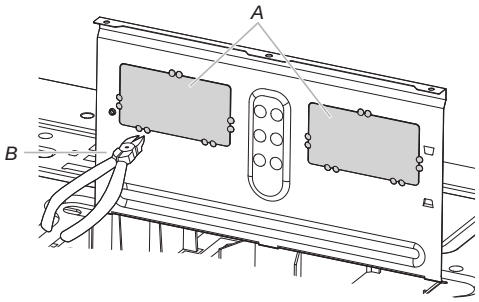

A. Rectangular vent covers
B. Diagonal wire cutting pliers

7. Lower blower motor back into microwave oven. Exhaust ports face the top of microwave oven.

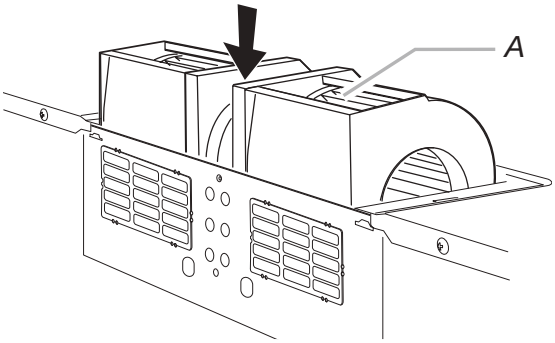

A. Exhaust port

IMPORTANT: If blower motor is not positioned with flat side facing the back of the microwave oven (as shown), performance will be poor.

8. Reconnect the blower motor wire into the connector.
9. Reattach the 2 blower screws into the recessed holes in the back of the microwave.
10. Check to make sure the 2 screws are secured properly in the blower motor screw holes, so that the motor cannot move.
11. Return the damper plate to its original horizontal position.

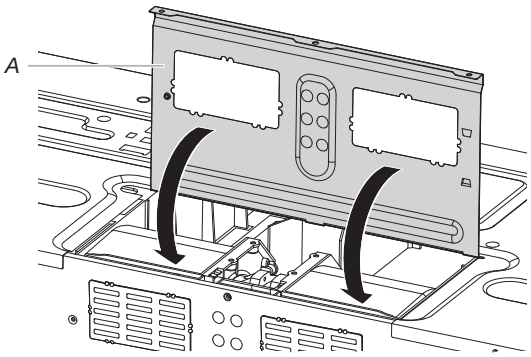

A. Damper plate

12. Secure damper plate with 2 screws removed in Step 1.

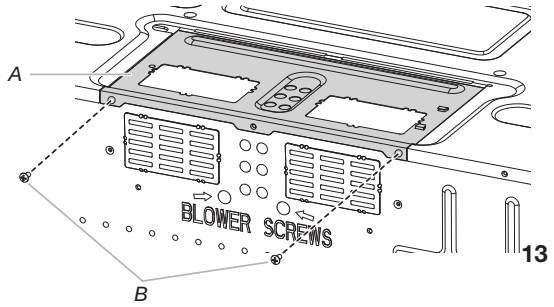

A. Damper plate
B. Screws

⚠WARNING

Electrical Shock Hazard

Plug into a grounded 3 prong outlet.

Do not remove ground prong.

Do not use an adapter.

Do not use an extension cord.

Failure to follow these instructions can result in death, fire, or electrical shock.

13. Plug in the microwave oven. Check if the vent fan runs with abnormal sounds, go back through the steps to see which step was skipped.

Install Damper Assembly for Roof Venting Installation

1. Insert damper assembly through the cabinet cutout so that the long tab of the damper assembly slides under the raised tabs of the damper plate. Then secure with #6 x 3/8" sheet metal screw.

NOTE: The screw cannot be installed if the damper assembly is not positioned as shown.

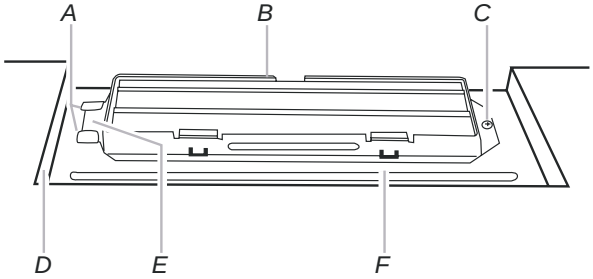

A. Raised tabs
B. Damper assembly
C. #6 x 3/8" Sheet metal screw
D. Upper cabinet cutout
E. Long tab
F. Damper plate

VENTING DESIGN SPECIFICATIONS

This section is intended for architectural designer and builder/contractor reference only.

NOTES:

- Vent materials needed for installation are not provided with microwave hood combination.
- We do not recommend using a flexible metal vent.
- To avoid possible product damage, be sure to vent air outside, unless using recirculation installation. Do not vent exhaust air into concealed spaces, such as spaces within walls or ceilings, attics, crawl spaces or garages.

For optimal venting installation, we recommend:

- Using roof or wall caps that have backdraft dampers.
- Using a rigid metal vent.
- Using the most direct route by minimizing the length of the vent and number of elbows to provide efficient performance.
- Using uniformly sized vents.
- Using duct tape to seal all joints in the vent system.
- Using caulking compound to seal exterior wall or roof opening around cap.
- Not installing 2 elbows together, for optimal hood performance.

If venting through the wall, be sure that there is proper clearance within the wall for the damper to open fully.

If venting through the roof, and rectangular-to-round transition is used, be sure there are at least 3" (7.6 cm) of clearance between the top of the microwave oven and the transition piece. See “Rectangular-to-Round Transition” illustration.

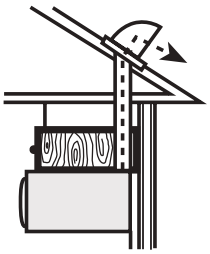

Roof venting

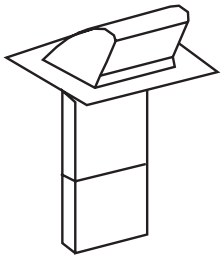

Roof cap

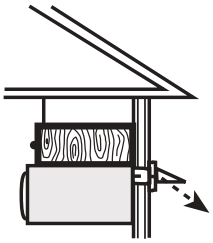

Wall venting

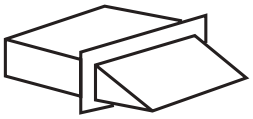

Wall cap

Rectangular-to-Round Transition

NOTE: The minimum 3" (7.6 cm) clearance must exist between the top of the microwave oven and the rectangular-to-round transition piece so that the damper can open freely and fully.

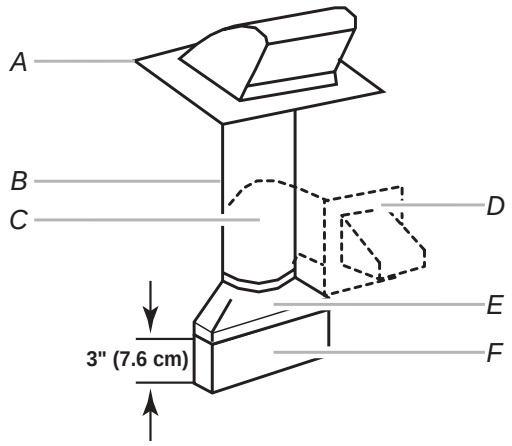

A. Roof cap
B. 6" (15.2 cm) min. diameter round vent
C. Elbow (for wall venting only)
D. Wall cap
E. 3¼" x 10" to 6" (8.3 x 25.4 cm to 15.2 cm) rectangular-to-round transition piece
F. Vent extension piece, at least 3" (7.6 cm) high

Recommended Standard Fittings

The following length equivalents are for use when figuring vent length. See the examples in "Recommended Vent Length."

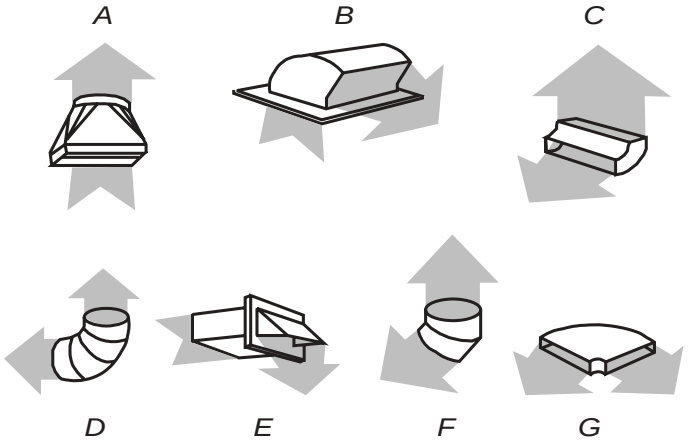

A. Rectangular-to-round transition piece: 3¼" x 10" to 6" = 5 ft (8.3 x 25.4 cm to 15.2 cm = 1.5 m)
B. Roof cap: 3¼" x 10" = 24 ft (8.3 x 25.4 cm = 7.3 m)
C. 90° elbow: 3¼" x 10" = 25 ft (8.3 x 25.4 cm = 7.6 m)
D. 90° elbow: 6" = 10 ft (15.2 cm = 3 m)
E. Wall cap: 3¼" x 10" = 40 ft (8.3 x 25.4 cm = 12.2 m)
F. 45° elbow: 6" = 5 ft (15.2 cm = 1.5 m)
G. 90° flat elbow: 3¼" x 10" = 10 ft (8.3 x 25.4 cm = 3 m)

Recommended Vent Length

A 3¼" x 10" (8.3 x 25.4 cm) rectangular or 6" (15.2 cm) round vent should be used.

The total length of the vent system including straight vent, elbow(s), transitions and wall or roof caps must not exceed the equivalent of 140 ft (42.7 m) for either type of vent. See the "Recommended Standard Fittings" section for equivalent lengths.

For best performance, use no more than three 90° elbows.

To calculate the length of the system you need, add the equivalent lengths of each vent piece used in the system. See the following examples:

3¼" x 10" (8.3 x 25.4 cm) vent system = 73 ft (22.2 m) total

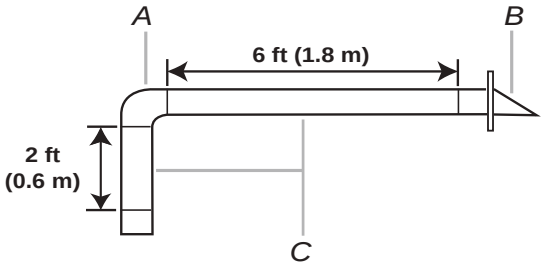

A. One 3¼" x 10" (8.3 x 25.4 cm) 90° elbow = 25 ft (7.6 m)
B. 1 wall cap = 40 ft (12.2 m)
C. 2 ft (0.6 m) + 6 ft (1.8 m) straight = 8 ft (2.4 m)

6" (15.2 cm) vent system = 73 ft (22.2 m) total

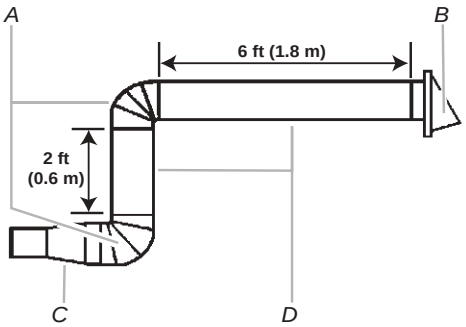

A. Two 90° elbows = 20 ft (6.1 m)
B. 1 wall cap = 40 ft (12.2 m)
C. 1 rectangular-to-round transition piece = 5 ft (1.5 m)
D. 2 ft (0.6 m) + 6 ft (1.8 m) straight = 8 ft (2.4 m)

If the existing vent is round, a rectangular to round transition piece must be used. In addition, a rectangular 3" (7.6 cm) extension vent between the damper assembly and rectangular to round transition piece must be installed to keep the damper from sticking.