REV	CHANGE NO.	CHANGE DATE	DESCRIPTION OF CHANGE	SIGN

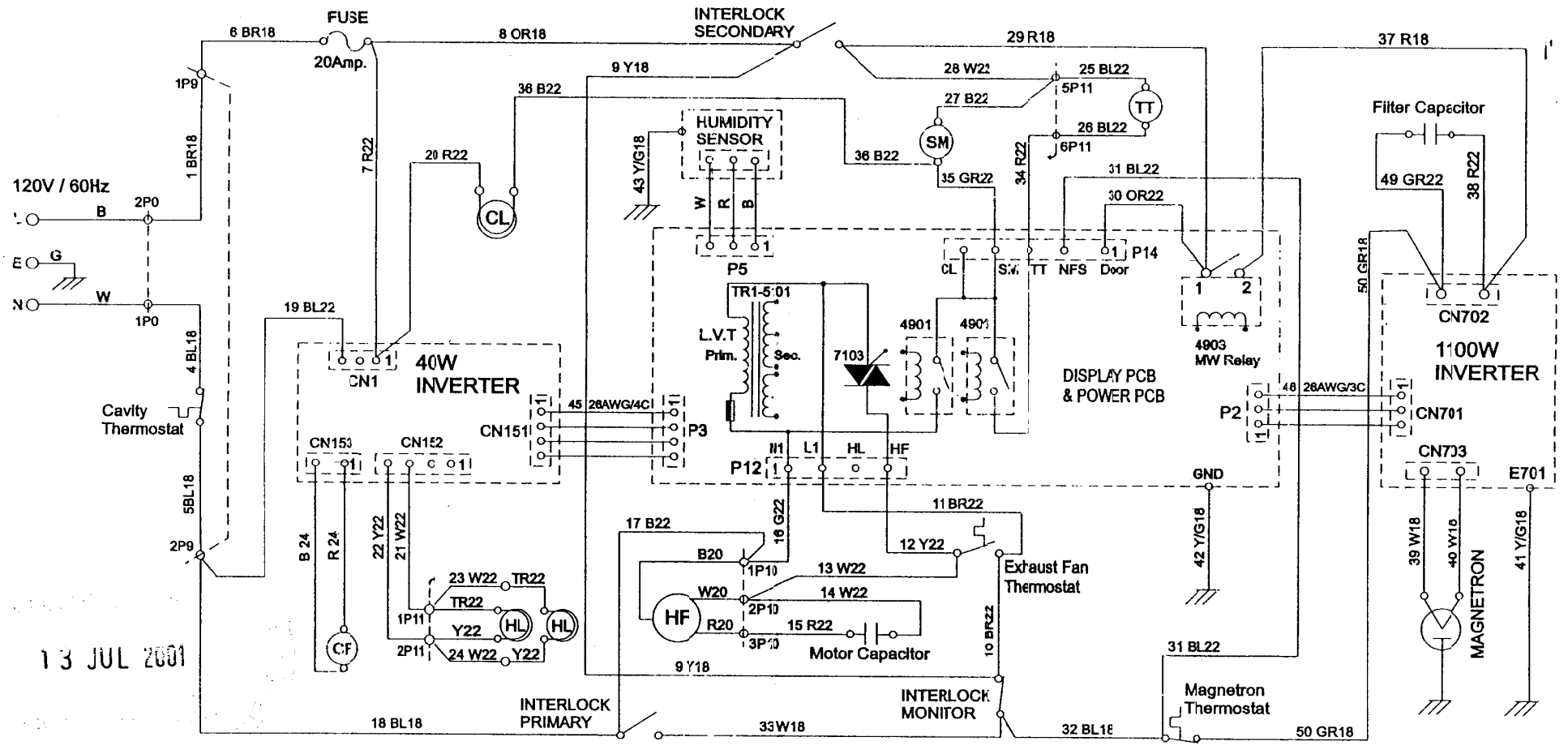

13 JUL 2001

CONDITION: DOOR OPEN

SYMBOL NOTES

- CL — CAVITY LAMP
- HL — HOOD LAMP (COOKTOP LAMP)
- SM — STIRRER MOTOR
- TT — TURNTABLE MOTOR
- CF — COOLING FAN MOTOR (DC FAN MOTOR)
- HF — HOOD EXHAUST FAN MOTOR

P2/P3/P5/P12/P14/CN1/CN151/CN152/CN153/CN701/CN702/CN703: WIRE TO PCB CONNECTORS

P0/P9/P10/P11: WIRE TO WIRE CONNECTORS

B: BLACK W: WHITE BR: BROWN
BL: BLUE G: GREEN OR: ORANGE
R: RED Y: YELLOW GR: GREY
TR: TRANSPARENT P: PINK
26AWG/3C(4C): RIBBON CABLE/3C(4C)

1 BR18 — WIRE SIZE - AWG18
WIRE COLOUR - BROWN
WIRE NO. - 1

RELEASE FOR:
- ☐ QUOTATION
- ☐ TOOL MAKING REQ. QTY. ____ PCS
- ☐ PURCHASING REQ. QTY. ____ PCS
- ☐ MODIFICATION REQ. QTY. ____ PCS
- ☐ UPDATE DWG.
- ☑ REFERENCE

APV. BY
DATE 13/7/01

Whirlpool HOME APPLIANCES

Shunde Whirlpool Electrical Appliances Co., Ltd.

DESIGNER: Dai, Xu Lei	TITLE: SCHEMATIC DIAGRAM		
DATE: July 12, 2001			
FIRST USE MODEL NO: Venus1 Whirlpool Sensor (GH8185x)	DWG. NO. MU-063		
ASSEMBLE TO:	SCALE:	UNIT:	A4
GENERAL TOLERANCES:	3rd PROJ	SHEET OF	

REV	CHANGE NO.	CHANGE DATE	DESCRIPTION OF CHANGE	SIGN

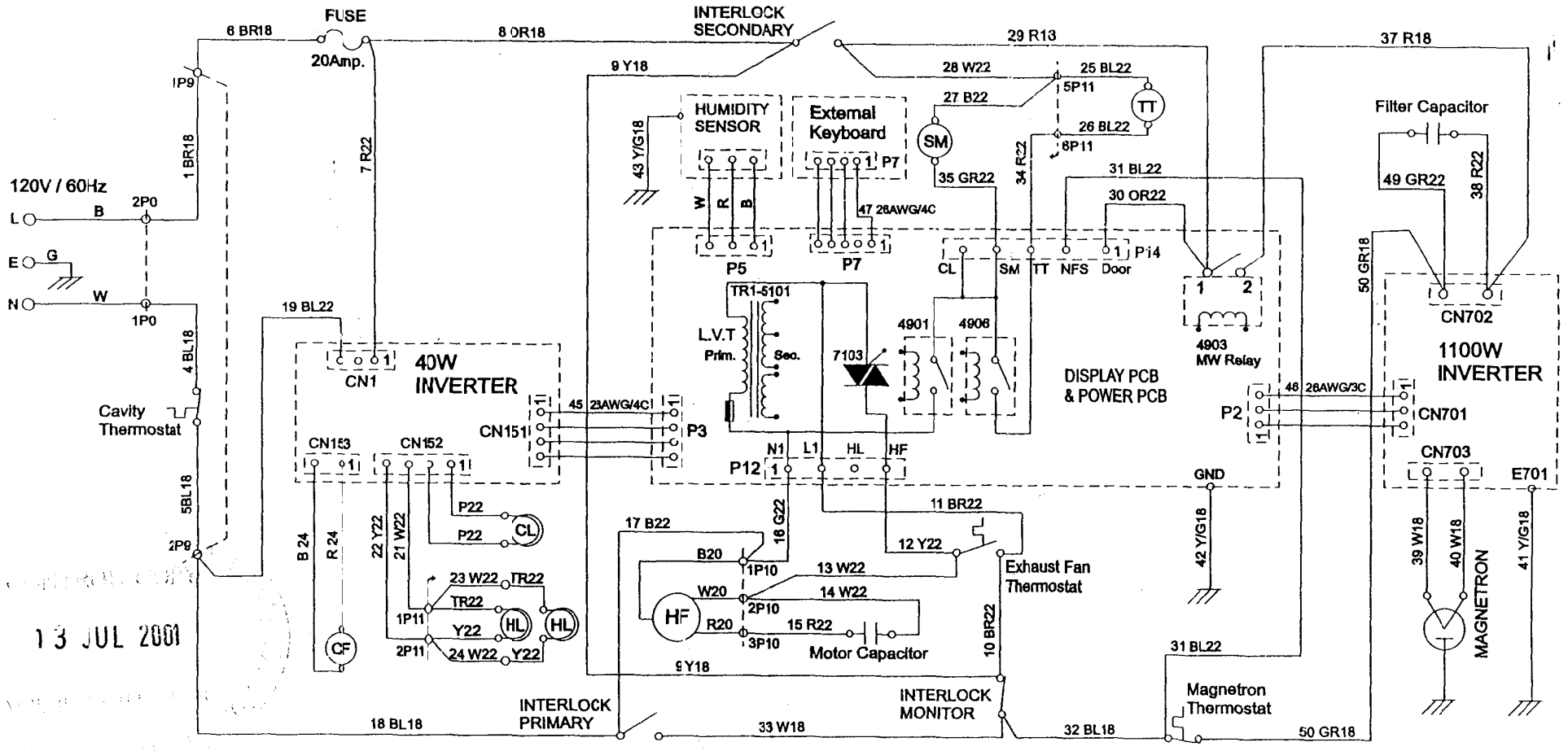

13 JUL 2001

CONDITION: DOOR OPEN

SYMBOL NOTES

- CL — CAVITY LAMP
- HL — HOOD LAMP (COOKTOP LAMP)
- SM — STIRRER MOTOR
- TT — TURNTABLE MOTOR
- CF — COOLING FAN MOTOR (DC FAN MOTOR)
- HF — HOOD EXHAUST FAN MOTOR

P2/P3/P5/P7/P12/P14/CN1/CN151/CN152/CN153/CN701/CN702/CN703: WIRE TO PCB CONNECTORS

P0/P9/F10/P11: WIRE TO WIRE CONNECTORS

B: BLACK	W: WHITE	BR: BROWN
BL: BLUE	G: GREEN	OR: ORANGE
R: RED	Y: YELLOW	GR: GREY
TR: TRANSPARENT		P: PINK

26AWG/3C(4C): RIBBON CABLE/3C(4C)

1 BR18 — WIRE SIZE - AWG18
— WIRE COLOUR - BROWN
— WIRE NO. - 1

RELEASE FOR:
- ☐ QUOTATION
- ☐ TOOL MAKING REQ. QTY. _____ PCS
- ☐ PURCHASING REQ. QTY. _____ PCS
- ☐ MODIFICATION REQ. QTY. _____ PCS
- ☐ UPDATE DWG.
- ☑ REFERENCE
- ☐ _____

APP. BY
DATE 13/7/01

Whirlpool HOME APPLIANCES

Shunde Whirlpool Electrical Appliances Co. , Ltd.

DESIGNER: Dai, Xu Lei		TITLE: SCHEMATIC DIAGRAM	
DATE: July 12 , 2001			
FIRST USE MODEL NO: Venus1 Kenmore Sensor3 (6168x)		DWG. NO. MU-062	
ASSEMBLE TO:		SCALE:	UNIT: A4
GENERAL TOLERANCES:		3rd PROJ	SHEET OF

REV	CHANGE NO.	CHANGE DATE	DESCRIPTION OF CHANGE	SIGN

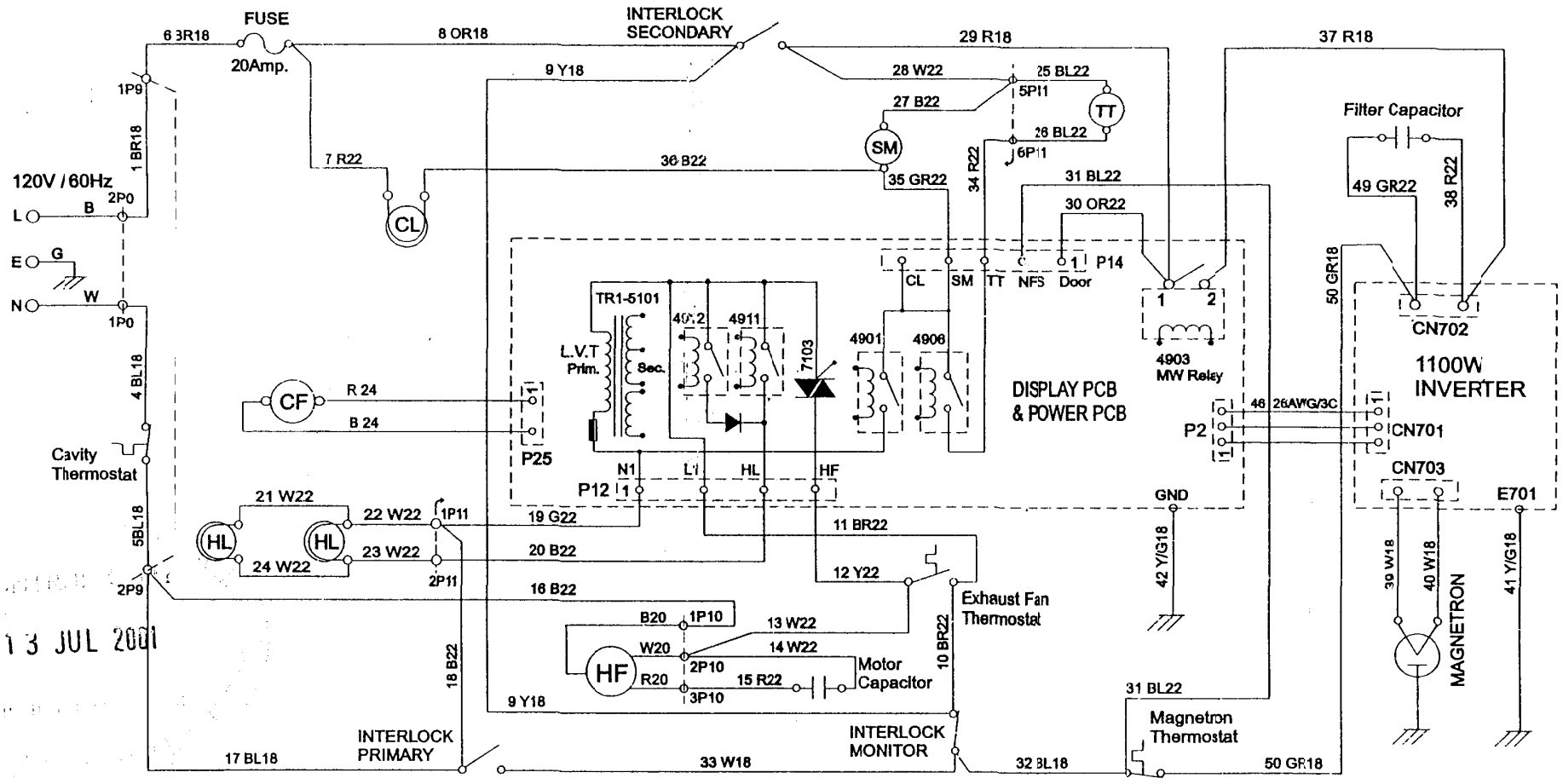

CONDITION: DOOR OPEN

SYMBOL NOTES

- CL — CAVITY LAMP
- HL — HOOD LAMP (COOKTOP LAMP)
- SM — STIRRER MOTOR
- TT — TURNTABLE MOTOR
- CF — COOLING FAN MOTOR (DC FAN MOTOR)
- HF — HOOD EXHAUST FAN MOTOR

P2/P12/P14/P25/CN701/CN702/CN703: WIRE TO PCB CONNECTORS

P0/P9/P10/P11: WIRE TO WIRE CONNECTORS

B: BLACK	W: WHITE	BR: BROWN
BL: BLUE	G: GREEN	OR: ORANGE
R: RED	Y: YELLOW	GR: GREY
TR: TRANSPARENT		P: PINK

26AWG/3C: RIBBON CABLE/3C

1 BR18 — WIRE SIZE - AWG18
WIRE COLOUR - BROWN
WIRE NO. - 1

RELEASE FOR:
- ☐ QUOTATION
- ☐ TOOL MAKING REQ. QTY. _____ PCS
- ☐ PURCHASING REQ. QTY. _____ PCS
- ☐ MODIFICATION REQ. QTY. _____ PCS
- ☐ UPDATE DWG.
- ☑ REFERENCE
- ☐ _____

APP. BY: _____
DATE: 13/7/01

Whirlpool HOME APPLIANCES

Shunde Whirlpool Electrical Appliances Co. , Ltd.

DESIGNER: Dai, Xu Lei	TITLE: SCHEMATIC DIAGRAM		
DATE: July 12, 2001			
FIRST USE MODEL NO: Venus1 Whirlpool Mainstream (MH8180x)	DWG. NO. MU-061		
ASSEMBLE TO:	SCALE:	UNIT:	A4
GENERAL TOLERANCES:	3rd PROJ	SHEET	OF

REV	CHANGE NO.	CHANGE DATE	DESCRIPTION OF CHANGE	SIGN

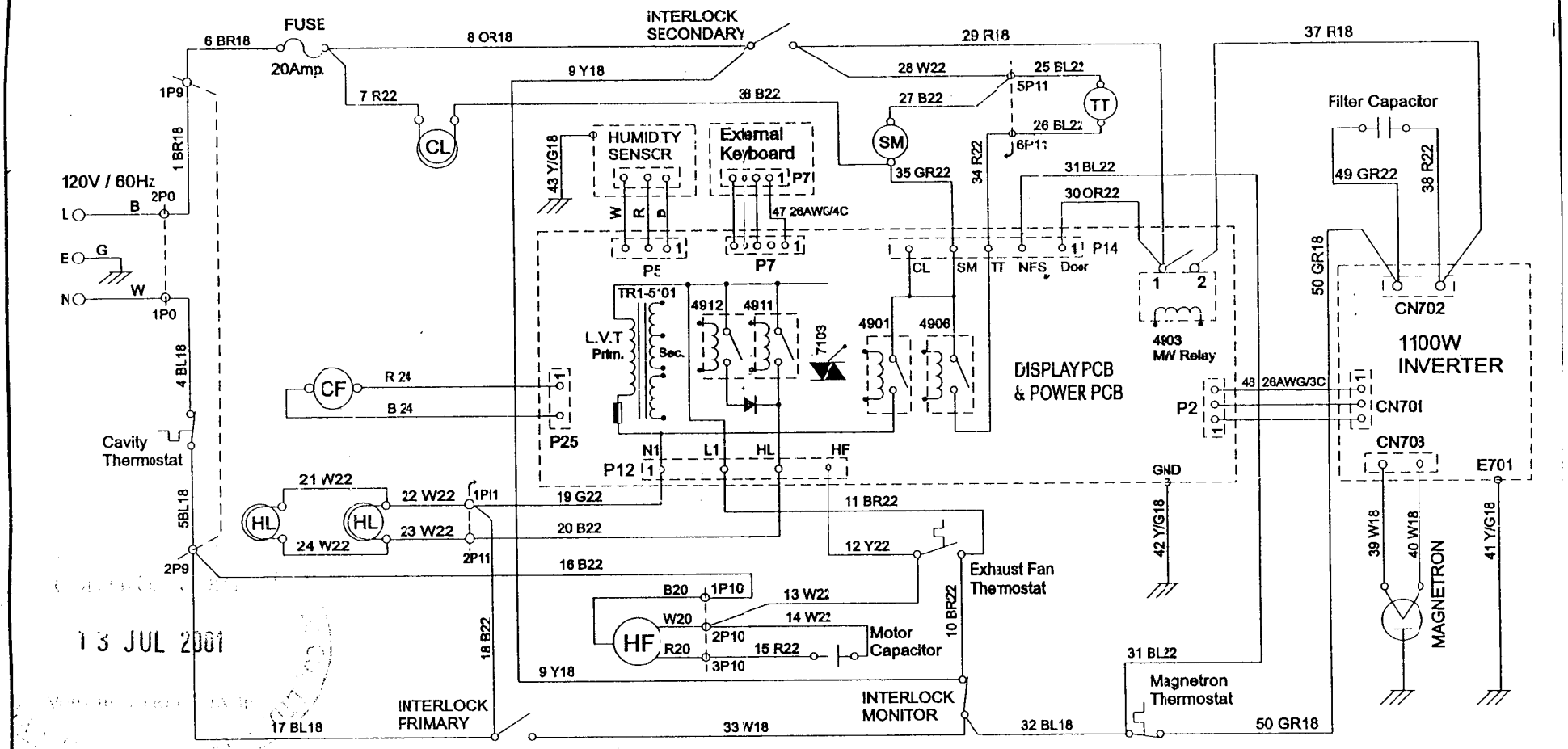

13 JUL 2001

CONDITION: DOOR OPEN

SYMBOL NOTES

- CL — CAVITY LAMP
- HL — HOOD LAMP (COOKTOP LAMP)
- SM — STIRRER MOTOR
- TT — TURNTABLE MOTOR
- CF — COOLING FAN MOTOR (DC FAN MOTOR)
- HF — HOOD EXHAUST FAN MOTOR

P2/P5/P7/P12/P14/P25/CN701/CN702 /CN703: WIRE TO PCB CONNECTORS

P0/P9/P10/P11: WIRE TO WIRE CONNECTORS

B: BLACK W: WHITE BR: BROWN
BL: BLUE G: GREEN OR: ORANGE
R: RED Y: YELLOW GR: GREY
TR: TRANSPARENT P: PINK

26AWG/3C(4C): RIBBON CABLE/3C(4C)

1 BR18 — WIRE SIZE - AWG18
— WIRE COLOUR - BROWN
— WIRE NO. - 1

RELEASE FOR:
- ☐ QUOTATION
- ☐ TOOL MAKING REQ. QTY. _____ PCS
- ☐ PURCHASING REQ. QTY. _____ PCS
- ☐ MODIFICATION REQ. QTY. _____ PCS
- ☐ UPDATE DWG.
- ☑ REFERENCE
- ☐

APP. BY
DATE 13/7/2001

Whirlpool HOME APPLIANCES

Shunde Whirlpool Electrical Appliances Co. , Ltd.

DESIGNER: Dai, Xu Le	TITLE: SCHEMATIC DIAGRAM		
DATE: July 12, 2001			
FIRST USE MODEL NO: Venus1 Kenmore Sensor2 (6165x)	DWG. NO. MU-060		
ASSEMBLE TO:	SCALE:	UNIT:	A4
GENERAL TOLERANCES:	3rd PROJ	SHEET OF	