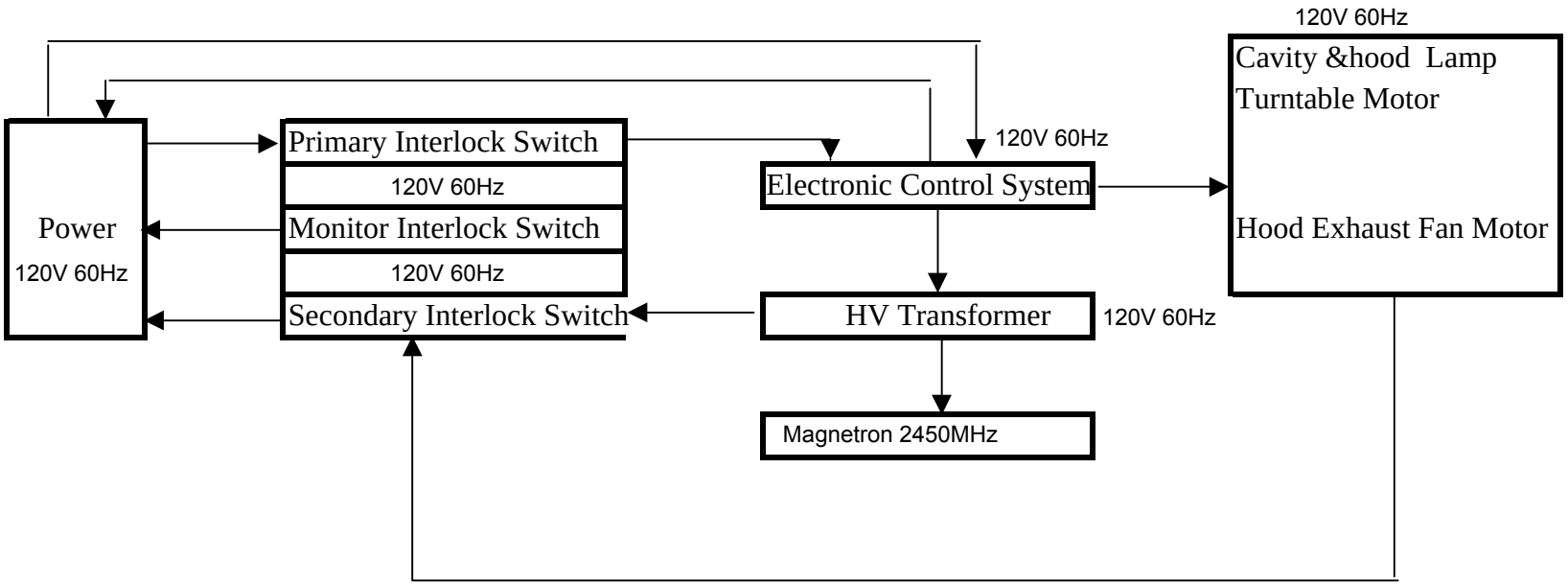Block Diagram For Microwave oven
Model:IMH16 series