Life Guard

2.4GHz Wireless Surveillance

FCC ID : PRATD1501-TX

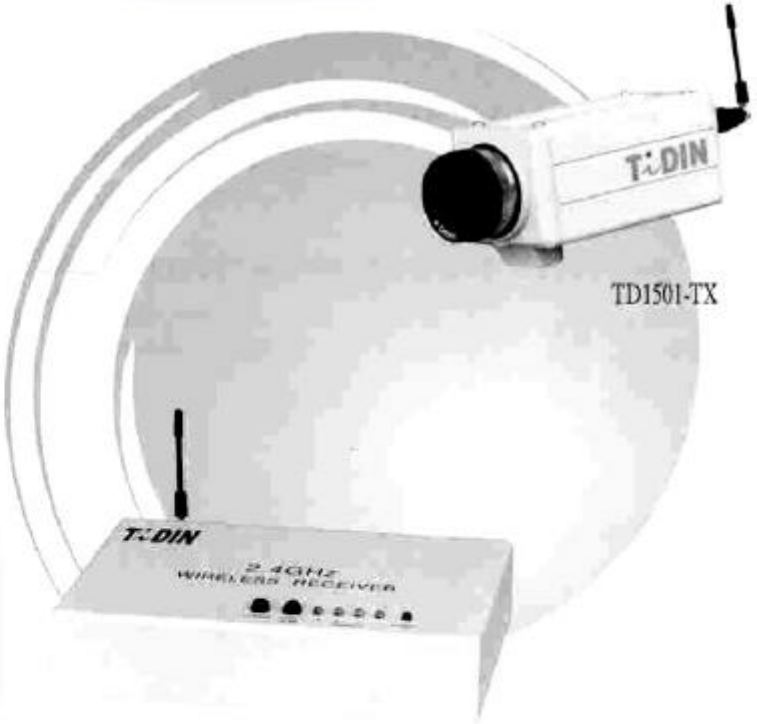

TD1501-RX

User's Manual

CONTENTS

CHAPTER1 INTRODUCTION

1-1 Introduction to TD1501-TX & TD1501-RX.....1
1-2 Package Contents.....1
1-3 Specifications.....2
1-4 Function Description.....3~4

CHAPTER2 HARDWARE INSTALLATION

2-1 Step by Step Installation.....5~6
2-2 Multi-options.....6

CHAPTER3 SAFETY NOTICE AND TROUBLE SHOOTING

3-1 Safety Notice.....7
3-2 Trouble Shooting.....8

CHAPTER1 INTRODUCTION

1-1 Introduction to TD1501-TX & TD1501-RX

The TD1501-TX is a very high frequency (2.4GHZ) wireless audio & video transmitter. Using TD1501-TX, you can transmit audio and video signals from one area to another by the CCD camera.

The TD1501-RX is a receiver to receive wireless audio and video signals transmitted by the TD1501-TX. So that you can view and record any image transmitted by the TD1501-TX in other location.

1-2 Package Contents

❶ TD1501-TX Wireless Color CCD Camera
❷ TD1502-RX Wireless receiver
❸ 12V 350mA Power Adapter*2
❹ Camera mounting bracket
❺ A/V Cable

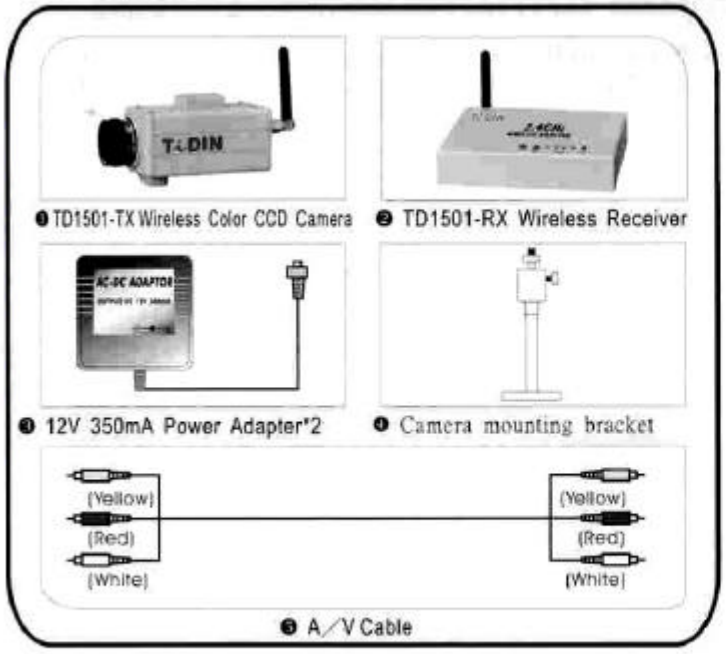

1-3 Specifications

RF interface: Transmitter / Receiver
Output Power: 1mw
Receiver Sensitivity: Over-80dBm
Frequency Range: 2.400~2.4835Ghz/ 2.400~2.4835Ghz
Channel: 4 Channels/ 4 Channels
Channel Space: 19MHz
Frequency Stability: +/-250Khz
A/V Modulations Type: FM / FM
Video Output Format: — NTSC(PAL)/ --
Video Output Level: — 1Vp-p@75Ohms, S/N>38dB
Audio Output Level: — 1.45VPP@600Ohms for L&R
Antenna Interface: 50Ohms
Power Supply: Input: 110V(220V) AC / Input: 110V(220V) AC
Output: 12V, 350mA DC / Output: 12V, 350mA DC
Power Consumption: 12V, 300mA / 12V, 300mA
Operation Temperature: +0°C~+50°C / +0°C~+50°C
Operation Environment: -20+60°C/ -20+60°C

CCD Camera Specifications

Pick up-Element: Color 1/3" CCD image sensor (Samsung)
Scanning: 2:1 interlace 492(V)x512(H) For NTSC
or 582(V)x512(H) for PAL
Minimum Illumination: 1.5Lux at F2.0
S/N Ratio: 48dB
Gain Control: Automatic
White Balance: Automatic
Back Light Compensation: Automatic
Lens: C/CS mount (option)

1-4 Function Description

❶ DC 12V IN : Power connector, connects with the supplied adapter.
❷ LED : Shows the TD1501-TX Power status.
❸ CH SET : Select channel that you wish to send, then switch the channel to "ON" button, the other buttons set to "OFF".
❹ ANT (RF-OUT): Sends Audio and Video signals.
❺ CMOUNT LENS : The color CCD camera LENS.
❻ DC 12V IN : Power connector, connects with the supplied adapter.
❼ AUDIO OUT : Connects RF Amazing RX to the Audio IN of TV or VCR.
❽ VIDEO OUT : Connects RF Amazing RX to the VIDEO IN of TV or VCR.
❾ ANT(RF-IN) : Receives Audio and Video signals.
❿ PWR LED : Shows the TD1501-RX power status
⓫ Auto Scan : Scans the channels automatically by the default sequence timing.
⓬ Channel : Switches the channel by pressing the button

【TD1501-TX Wireless CCD Camera function Table】

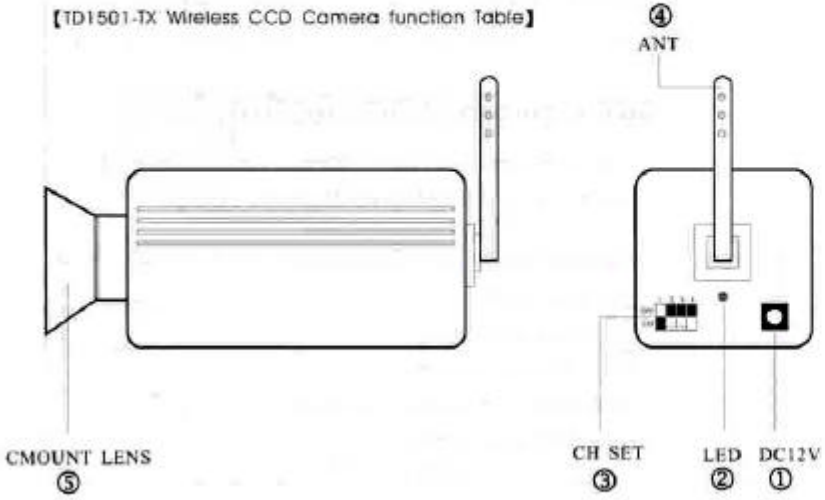

【TD1501-TX Wireless Receiver function Table】

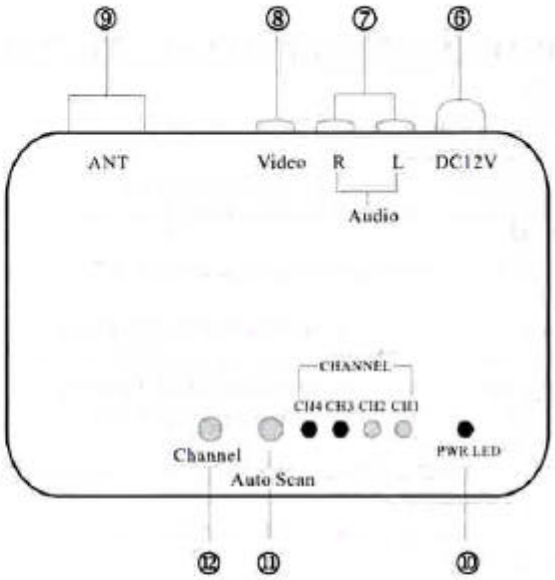

【Connection for TD1501-RX】

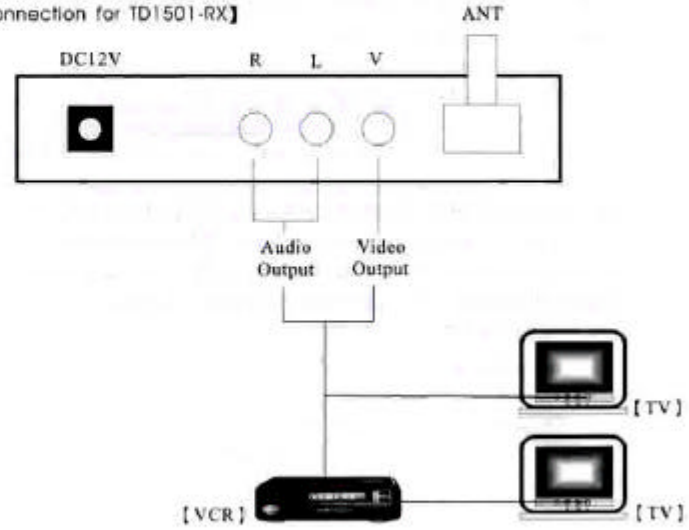

CHAPTER2 HARDWARE INSTALLATION

2-1 Step By Step Installation

1. Place the CCD Camera in proper location at where you intend to monitor.
2. Connect the side of DC12V power Adapter to the CCD Camera Power socket, and the other side to electrical outlet.
3. Place the Receiver at appropriate location next to TV or VCR.
4. Connect the side of A/V Cable to the A/V In of Receiver, and the other side to the A/V Out at the back of TV or VCR.
5. Connect the side of 12V power Adapter to the Receiver Power socket, and the other side to electrical outlet.
6. Turn on TV or VCR.
7. Press "TV/ VIDEO" button and choose VIDEO; the monitor screen will come out.
8. To record monitoring image, please operate recording functions in VCR.
9. Adjust antenna angles of CCD camera & receiver to best receiving position.
10. To do the set-up at 4-channel installer to camera and 4 receiving indicator to receiver.
    ① When you use one camera, switch the CH set button1 to "ON" ,and the rest CH set buttons2,3,4 to "OFF".
    ② When you use 2 cameras, you must switch first camera CH set button1 to "ON" and the rest CH set buttons 2,3,4 to "OFF" . The second camera you must switch CH set button 2 to "ON", and the rest CH set buttons1,3,4 to "OFF".(As the following diagrams).Please press the "Channel" button of the receiver to set the same channel both of the camera and receiver and then you can view the images at the TV from the camera's location.

Diagram:

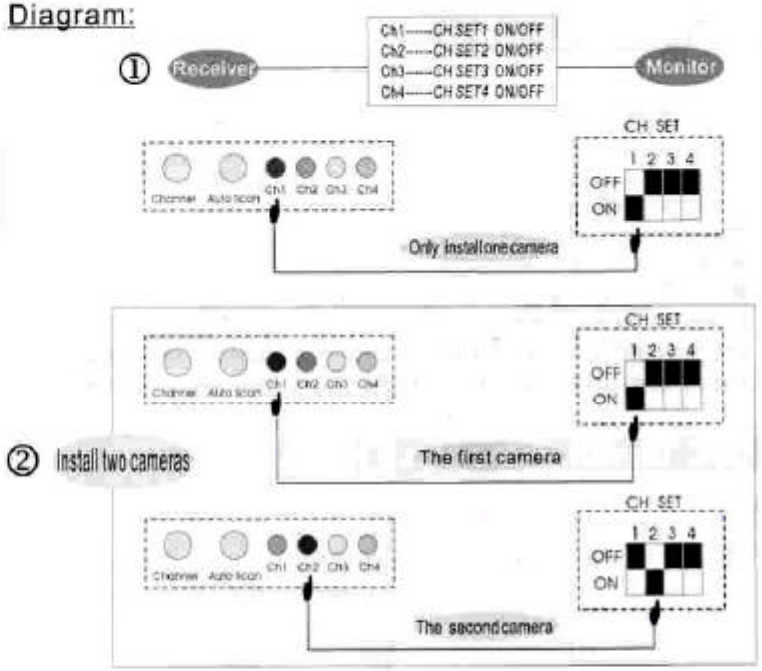

2-2 Multi-options

1. This product series can just receive video, or video and audio at a time, depending on different functions of Color CCD Camera as the user need.
2. With expansibility, it can support 1 to 4 Color CCD Cameras simultaneously to monitor places to places at a time by purchasing TD1501-TX Color CCD Camera.
3. If receiving message from 2 or more wireless Color CCD Cameras at a time, please switch the channel buttons manually to view 4 groups of monitoring images rotationally.

CHAPTER3 SAFETY NOTICE AND TROUBLE SHOOTING

3-1 Safety notice

1. This product is applicative to 12V volt, and could be damaged at excessive high or low Adapter.
2. While removing it, please pull out the Power from the electrical outlet and place it carefully preventing from crash or fall-down, to extend the usage of product.
3. Away from water, keep it in the dry place.
4. **Please keep the product completely. If the product is opened or the series number is torn off by customers, our company doesn't take responsibility for product exchange.**
5. **Transmitter should be placed higher than receiver in position.**

3-2 Trouble Shooting

Q1 : Why is there no monitoring image on TV screen?

* Make sure the TV can be normally working.
  ☞ Switch to other channel to check whether the TV can normally play TV program.
* Make sure the TV switch to Video.
  ☞ Switch the TV/Video again, and make sure the "Video" showed on the TV screen.
* Make sure the power of the Adapter is on to the
  ☞ wireless Color CCD camera.
  Check the LED is on or not at the back of wireless color CCD camera.
* Make sure the power of the Adapter to the Receiver is on.
  ☞ Check the LED is on or not on the wireless receiver surface.
* Make sure the A/V Cable has been connected.
  ☞ Check the two sides of A/V Cable connected to the Video IN of TV and video out of wireless Receiver.
* Make sure the distance is not over 300 feet(L.O.S).
  ☞ between wireless Color CCD Camera and wireless Receiver.

Q2 : Why is the monitoring image unclear on TV screen?

* Please adjust the lens of wireless CCD Camera by revolving to the right or left till the image is clear.

Q3 : Why is there only image but no sound on TV screen?

* Make sure the product you purchased can work for receiving video and audio message simultaneously.
* Make sure the A/V Cable is connected properly.
  ☞ Check the two sides of A/V Cable are connected to the VIDEO and AUDIO IN of TV and wireless Receiver simultaneously

Q4 : General speaking CCD camera's case will become heated after operating for a while, under this circumstance whether it have any side-effect on home security?

☞ No, it won't be any harm to home security.
Due to the IC inside the CCD camera will generate heat when operating, that is why we adopt metal materiel as the case to dissipate heat. Moreover the life time of metal material will be longer than plastic one.

FEDERAL COMMUNICATIONS COMMISSION

This device complies with Part 15 of the FCC Rules. Operation is subject to the following two conditions:(1) this device may not cause harmful interference, and (2) this device must accept any interference received, including interference that may cause undesired operation.

NOTE

This equipment has been tested and found to comply with the limits for a Class B digital device, pursuant to Part 15 of the FCC Rules. These limits are designed to provide reasonable protection. This equipment generates, uses and can radiated radio frequency energy and, if not installed and used in accordance with the instructions, may cause harmful interference to radio communications. However, there is no guarantee that interference will not occur in a particular installation If this equipment does cause harmful interference to radio or television reception, which can be determined by turning the equipment off and on, the user is encouraged to try to correct the interference by one or more of the following measures:

-Reorient or relocate the receiving antenna.
-Increase the separation between the equipment and receiver.
-Connect the equipment into an outlet on a circuit different from that to which the receiver is connected.
-Consult the dealer or an experienced radio/TV technician for help.

Changes or modifications not expressly approved by the party responsible for compliance could void the user‘ s authority to operate the equipment.

2.4GHz Wireless Surveillance Specification

Measurement Conditions

1.Normal test source voltage	Power adaptor: Input AC110V~120V 50Hz/60Hz AC220V~230V 50Hz/60Hz Output DC12V/350mA
2.Operation Temperature	0℃ ~+50℃
3.Operation Environment	-20℃ ~+60℃
4.RF input impedance	50 Ohm
5.Audio output impedance	600 Ohm
6.Video output impedance	75 Ohm

CCD Camera

NO	Measurements	Specification
1	Pick up-Element	Color 1/3" CCD Image sensor
2	Scanning System	2:1 Interlace 492(V)×512(H) For NTSC (EIA)/PAL (CCIR)
3	S/N Radio	≧ 48dB
4	Gain Control	Automatic Form DSP
5	White Balance	Automatic Form DSP
6	Back Light Compensation	Automatic Form DSP
7	Lens	C Mount
8	Minimum Illumination	1.5 Lux at F2.0
9	Video Output Level	1Vp-p@75Ω
10	Auto Iris	Shutter sensitivity: 1/60~1/100,000
11	Current Consumption	≦160mA

Transmitter

NO	Measurements	Specification
1	Channel Frequency (4 Channels)	2413MHz, 2432MHz, 2451MHz, 2470MHz
2	Video Format	NTSC (EIA)/PAL (CCIR)
3	Transmission Power	≦ 0dBm(1mW)
4	Video Input Level	1Vp-p@75Ω
5	Audio Input Level	Electrets Condenser microphone≦-40dB
6	Channel Spacing	19MHz
7	RF Channel Bandwidth	16MHz
8	Audio Carrier	6.0 MHz±10 KHz
9	Audio-Video Modulation Type	FM-FM
10	Frequency Stability	±250KHz
11	Current Consumption	≦150mA

Receiver

NO	Measurements	Specification
1	Local Oscillator Frequency (4 Channels)	1933MHz, 1952MHz, 1971MHz, 1990MHz
2	Video Format	NTSC (EIA)/PAL (CCIR)
3	Sensitivity	≧ –80dBm
4	Video Output Level	1Vp-p@75Ω
5	Audio Output Level	1.45Vp-p@600Ω
6	Channel Spacing	19MHz
7	IF Frequency	480MHz
8	Audio-Video Modulation Type	FM-FM
9	Frequency Stability	±250KHz
10	Current Consumption	≦300mA