CERTiTEK

CERTiTEK Standards Laboratory Co., Ltd.
386-1, Ho-Dong, Yongin-City, Kyungki-Do, Korea 449-100
Tel: +82-31-339-9970 Fax: +82-31-339-9855
http://www.certitek.com/

EMC TEST REPORT For FCC

Test Report No.	:	CTK01-F182
Date of Issue	:	December 26, 2001
Model/Type No:	:	NE-1202W
Kind of Product	:	NeonHome-LAN Sub
Applicant	:	NEONGATE INC.
Applicant Address	:	Yooil B/D 4F, 411-14, Dogok-dong, Gangnam-gu, Seoul, Korea.
Manufacturer	:	NEONGATE INC.
Manufacturer Address	:	Yooil B/D 4F, 411-14, Dogok-dong, Gangnam-gu, Seoul, Korea.
Contact Person	:	Mr. J. H. Lee
Telephone	:	+82-2-576-9730 (Int. : 236)
Received Date	:	December 15, 2001
Test period	:	Start: Dec. 16, 2001 End: Dec. 22, 2001
Test Results	:	☒ **In Compliance** ☐ **Not in Compliance**

The test results presented in this report relate only to the object tested.

CERTiTEK Standards Laboratory Co., Ltd. is accredited by Korea Laboratory Accreditation Scheme (KOLAS) which signed the International Laboratory Accreditation Cooperation (ILAC) Mutual Recognition Arrangement (MRA) for the above test item(s) and test method(s).

Tested by

Michael Jang
EMC Test Engineer
Date: December 26, 2001

Reviewed by

James Hong
EMC Technical Manager
Date: December 26, 2001

This Report shall not be reproduced except in full without the written approval of CERTiTEK
Form No.: CTK-FF1.1

REPORT REVISION HISTORY

Date	Revision	Page No
Dec. 26, 2001	(CTK01-F182) Issued	All

This report shall not be reproduced except in full, without the written approval of CERTiTEK Standards Laboratory Co., Ltd. This document may be altered or revised by CERTiTEK Standards Laboratory Co., Ltd. personnel only, and shall be noted in the revision section of the document. Any alteration of this document not carried out by CERTiTEK Standards Laboratory Co., Ltd. will constitute fraud and shall nullify the document.

TABLE OF CONTENTS

1.0 General Product Description 4
1.0 General Product Description 4
1.1 Model Differences 4
1.2 Device Modifications 4
1.3 EUT Configuration(s) 5
1.4 Test Software 5
1.5 EUT Operating Mode(s) 5
1.6 Calibration Details of Equipment Used for Measurement 6
1.7 Test Facility 6
1.8 Measurement Procedure 6
1.9 Laboratory Accreditations and Listings 7
2.0 Emissions Test Regulations 8
2.1 Conducted Voltage Emissions 9
2.2 Radiated Electric Field Emissions 10
Configurations 11
APPENDIX A - TEST DATA 12
Conducted Voltage Emissions (Quasi-Peak reading) 12
Radiated Electric Field Emissions (Quasi-Peak reading) 14

This Report shall not be reproduced except in full without the written approval of CERTiTEK
Form No.: CTK-FF1.1

1.0 General Product Description

The product is a device for NeonHome-LAN subscribers. And it is a NeonHome-LAN Ethernet switch device, which is connected with PC through Ethernet (RJ-45) to provide Internet access at 1.2 Mbps.

1.0.1 Tested Equipment

☒ Unless otherwise indicated, all tests were conducted on Model NE-1202W.

☐ Tests performed on Model _____ were considered to be representative of Model(s) _____.

☒ Class II Permissive Change
NE-1202 changed external material from plastic to metal (EZI) only, without any other changes.
* NE-1202 model's report No. : CTK01-F114.

1.0.2 Equipment Size, Mobility and Identification

Dimensions:	80 by 132 by 25	☒ mm ☐ in
Mobility:	☐ Hand-Held ☒ Table-top ☐ Floor-standing ☐	
Serial No.:	Not Applicable	

1.0.3 Electrical Ratings

Input:
1. EUT - 5 VDC, 800 mA
2. Adaptor - 100-240VAC, 0.25A, 50/60Hz

Output:
1. EUT - Not applicable
2. Adaptor - 5 VDC, 800 mA

1.0.4 Test Voltage & Frequency (Using the Adaptor)

Unless indicated otherwise on the individual data sheet or test results, the test voltage and frequency was as indicated below.

Voltage: 120VAC
Frequency: 60Hz

1.0.5 Clock & Other Frequencies Utilized

20 MHz & 25MHz

1.1 Model Differences

Not applicable

1.2 Device Modifications

The following modifications were necessary for compliance:

Not applicable

This Report shall not be reproduced except in full without the written approval of CERTiTEK
Form No.: CTK-FF1.1

1.3 EUT Configuration(s)

See Appendix A for individual test set-up configuration(s). The following peripheral devices and/or interface cables were connected during the measurement:

☒ Peripheral Devices

Device	Manufacturer	Model No.	Serial No.	FCC ID or DoC
PC	Hewlett Packard	DTPC-17	SG01501776	DOC
Monitor	Hewlett Packard	D2813	TW61100109	DOC
MOUSE (Serial type)	Microsoft	BASM1	4475951-20000	DOC
MOUSE (PS/2 type)	PANWEST	Cyber Beetle	PM1F184045737	DOC
MOUSE (USB type)	PANWEST	Cyber Beetle	PM1F154000055	DOC
MOUSE (USB type)	PANWEST	Cyber Beetle	PM1F144009945	DOC
KEYBOARD	World Com Mart	KB120	-	D840902 MIC
Game Pad	Microsoft	Sidewinder game pad	03426853	C3KMGP1
HEADSET	CAMAC	CMK-C3	-	-
PRINTER	Hewlett Packard	C4530A	US7A91703J	DOC
Telephone	-	-	-	-

☒ Cable Description

#	Description	Ferrited	Length (m)	Other Details
1	AC Power, Unshielded	No	1.8	Connect to AC Power from PC
2	AC Power, Unshielded	No	1.8	Connect to AC Power from Monitor
3	AC Power, Unshielded	No	1.8	Connect to AC Power from printer
4	Monitor cable, Shielded	Yes	1.8	Connect to PC
5	Printer cable, Shielded	No	1.8	Connect to PC
6	Telephone line, Unshielded	No	2.0	-
7	Game Pad cable, Unshielded	No	2.0	-
8	Headset cable, Unshielded	No	2.0	-
9	Keyboard cable, Shielded	No	2.0	PS/2 Type
10	Mouse cable, Shielded	No	2.0	USB Type
11	Mouse cable, Shielded	No	2.0	USB Type
12	Mouse cable, Shielded	No	2.0	Serial Type
13	Mouse cable, Shielded	No	2.0	PS/2 Type
14	Line in cable, Unshielded	No	2.0	-
15	Corporate cable, Unshielded	No	2.0	Connected to corporate line
16	LAN cable, Unshielded	No	1.5	Connect to PC
17	DC output cable, Unshielded	No	1.8	-
18	AC Power, Unshielded	-	-	Direct plug-in

n/a = not available

1.4 Test Software

☒ Pinging
☐ _____

1.5 EUT Operating Mode(s)

Equipment under test was operated during the measurement under the following conditions:

☐ Test program (H-Pattern)
☐ Standby
☒ Practice operation
☐ Test program (color bar)
☐ Test program (customer specific)

This Report shall not be reproduced except in full without the written approval of CERTiTEK
Form No.: CTK-FF1.1

1.6 Calibration Details of Equipment Used for Measurement

Test equipment and test accessories are calibrated on regular basis. The maximum time between calibrations is one year or what is recommended by the manufacturer, whichever is less. All test equipment calibrations are traceable to the Korea Research Institute of Standards and Science (KRISS), therefore, all test data recorded in this report is traceable to KRISS.

1.7 Test Facility

The measurement facility is located at 386-1, Ho-Dong, Yongin-City, Kyungki-Do, Korea 449-100. The sites are constructed in conformance with the requirements of ANSI C63.7, ANSI C63.4 and CISPR Publication 22.

1.8 Measurement Procedure

Preliminary AC power line conducted emissions tests were performed shielded room. To find worst mode, several typical mode and typical cable position were tested.
Final AC power line conducted emissions test was performed shielded room. (location is same as Preliminary test)
Based on the preliminary tests of the EUT, final test was proceeded worst case test mode and cable configuration.

Preliminary radiated emissions test were performed anechoic chamber (Distance of antenna and EUT was 3 m). To find worst mode, several typical mode and typical cable position were tested and peak level and frequency were recorded.

Final radiated emissions test was performed Open Area Test Site. Based on the preliminary tests of the EUT, final test was proceeded worst case test mode and cable configuration.

* Measurement procedures was In accordance with ANSI C63.4-1992 7.2.3, 7.2.4, 8.3.1.1, 8.3.1.2

This Report shall not be reproduced except in full without the written approval of CERTiTEK
Form No.: CTK-FF1.1

1.9 Laboratory Accreditations and Listings

Country	Agency	Scope of Accreditation	Logo
USA	**FCC**	3 and 10 meter Open Area Test Sites to perform FCC Part 15/18 measurements.	93250
JAPAN	**VCCI**	10 meter Open Area Test Site and one conducted site.	R-948, C-986
KOREA	**MIC**	10 meter Open Area Test Site and EMS (ESD, RS, EFT/Burst, Surge)	No. 51, KR0025
International	**KOLAS**	EMC	

This Report shall not be reproduced except in full without the written approval of CERTiTEK
Form No.: CTK-FF1.1

2.0 Emissions Test Regulations

The emissions tests were performed according to following regulations:

☐ EN 50081-1 /1992		
☐ EN 55011 /1998	☐ Group 1 ☐ Class A	☐ Group 2 ☐ Class B
☐ EN 55013 /A12:1994		
☐ EN 55014 /1987	☐ Household appliances and similar ☐ Portable tools ☐ Semiconductor devices	
☐ EN 55014 /A2:1990		
☐ EN 55014 /1993	☐ Household appliances and similar ☐ Portable tools ☐ Semiconductor devices	
☐ EN 55015 /1987 ☐ EN 55015 /A1:1990 ☐ EN 55015 /1993		
☐ EN 55022 /A1:1995	☐ Class A	☐ Class B
☐ EN 55022 /1998	☐ Class A	☐ Class B
☐ EN 61000-3-2 /1995 (EN 60555 Part 2 /4.87) ☐ EN 61000-3-3 /1995 (EN 60555 Part 3 /4.87)		
☐ BS		
☐ VCCI V-3/99.05 : 1999	☐ Class A	☐ Class B
☒ FCC Part 15 SUBPART B	☐ Class A	☒ Class B
☐ AS 3548 (1992)	☐ Class A	☐ Class B
☐ CISPR 11 (1990)	☐ Group 1 ☐ Class A	☐ Group 2 ☐ Class B
☐ CISPR 22 (1993)	☐ Class A	☐ Class B

This Report shall not be reproduced except in full without the written approval of CERTiTEK
Form No.: CTK-FF1.1

2.1 Conducted Voltage Emissions

Test Date
December 20, 2001

Test Location
EMI-CE: Shielded Room

Test Instruments

☒ Field Strength Meter	Rohde Schwarz	ESHS30	828144/002

Test Accessories

☐ LISN	EMCO	3825/2	9206-1971
☒ LISN	EMCO	3825/2	9409-2246
☒ LISN	EMCO	3825/2	9607-2574
☒ Control PC	HP	Vectra 500	SG72000192

Frequency Range of Measurement
☐ 150 kHz to 30 MHz
☒ 450 kHz to 30 MHz
☐ _____

Instrument Settings
IF Band Width: 9 kHz

Test Results
The requirements are:

☒ MET minimum margin is 8.9 dBμV at 5.19 MHz
☐ NOT MET limit exceeded by maximum of ___ dBμV at _____ MHz
☐ NOT APPLICABLE

Remarks
See Appendix A for test data.

This Report shall not be reproduced except in full without the written approval of CERTiTEK
Form No.: CTK-FF1.1

2.2 Radiated Electric Field Emissions

Test Date
December 22, 2001

Test Location
☐ EMI-OATS: Testing was performed at a test distance of 10 m
☒ EMI-OATS: Testing was performed at a test distance of 3 m

Test Instruments

☒ Field Strength Meter	Rohde Schwarz	ESVS30	826638/008

Test Accessories

☒ ULTRA Broadband Antenna	R & S	HL562	361324/014
☐ Biconical Antenna	Schwarzbeck	BBA9106	41-00201
☐ Biconical Antenna	EMCO	3110B	9607-2564
☐ Log-periodic Antenna	EMCO	3146	9607-4567

Frequency Range of Measurement
30 MHz to 1 GHz

Instrument Settings
IF Band Width: 120 kHz

Test Results
The requirements are:

☒ MET minimum margin is 3.0 dB (μV/m) at 32.00 MHz
☐ NOT MET limit exceeded by maximum of ____ dB(μV/m) at _____ MHz
☐ NOT APPLICABLE

Remarks
See Appendix A for test data

This Report shall not be reproduced except in full without the written approval of CERTiTEK
Form No.: CTK-FF1.1

Configuration

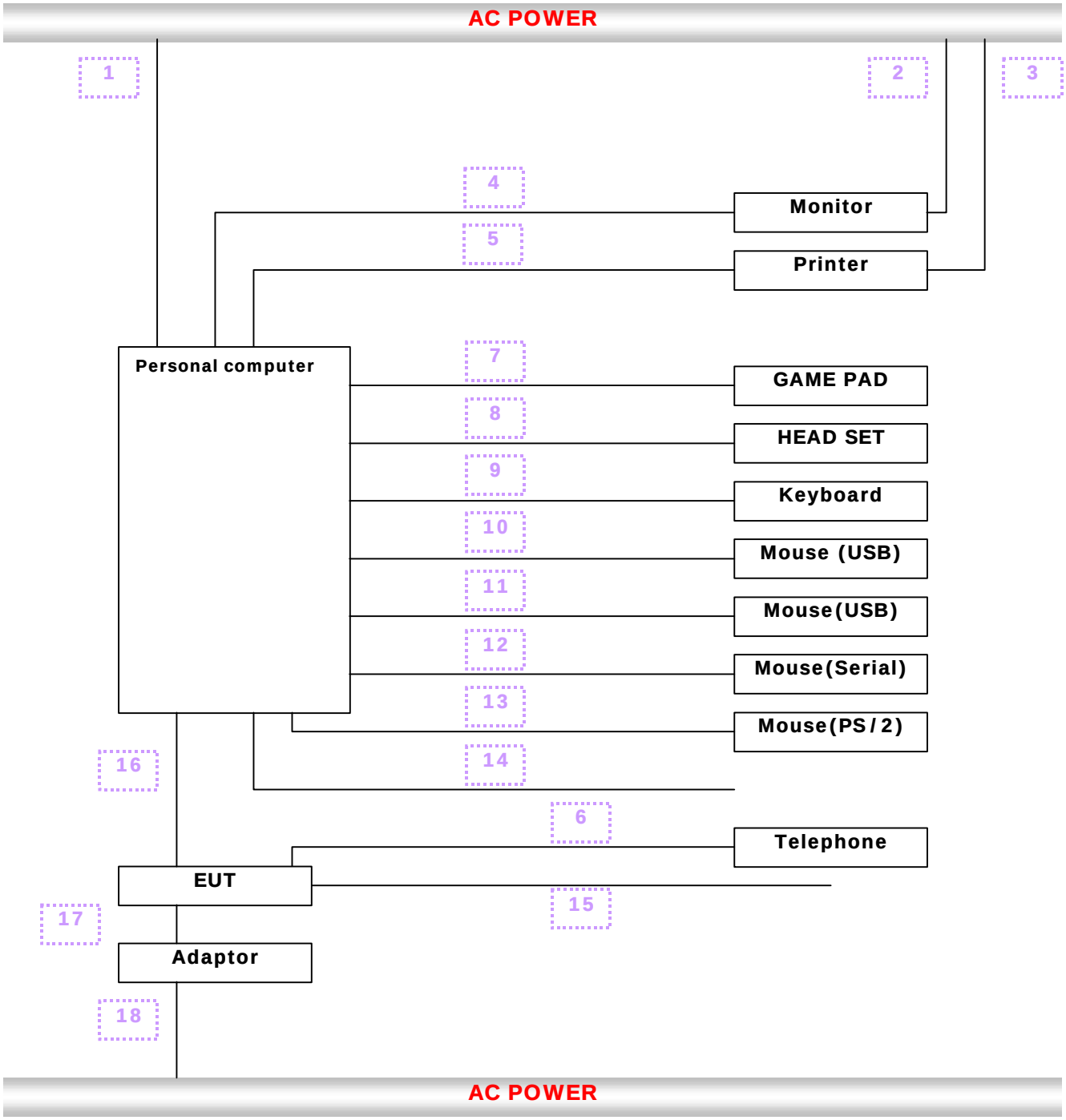

This Report shall not be reproduced except in full without the written approval of CERTiTEK
Form No.: CTK-FF1.1

APPENDIX A – TEST DATA

Conducted Voltage Emissions (Quasi-Peak reading)

Frequency	Correction Factor		Line	Quasi-peak				Average			
				Limit	Reading	Result	Margin	Limit	Reading	Result	Margin
[MHz]	LISN	Cable		[dBuV]	[dBuV]	[dBuV]	[dB]	[dBuV]	[dBuV]	[dBuV]	[dB]
0.47	0.7	0.1	L	48.0	35.9	36.7	11.3				
2.09	0.3	0.1	L	48.0	32.7	33.1	14.9				
2.56	0.3	0.1	L	48.0	36.0	36.4	11.7				
2.76	0.3	0.1	N	48.0	34.5	34.9	13.1				
5.19	0.3	0.1	N	48.0	38.7	39.1	8.9				
5.22	0.3	0.1	L	48.0	36.8	37.2	10.8				
16.00	0.4	0.2	L	48.0	31.3	31.9	16.1				
27.99	0.7	0.4	L	48.0	31.8	32.9	15.1				

This Report shall not be reproduced except in full without the written approval of CERTiTEK
Form No.: CTK-FF1.1

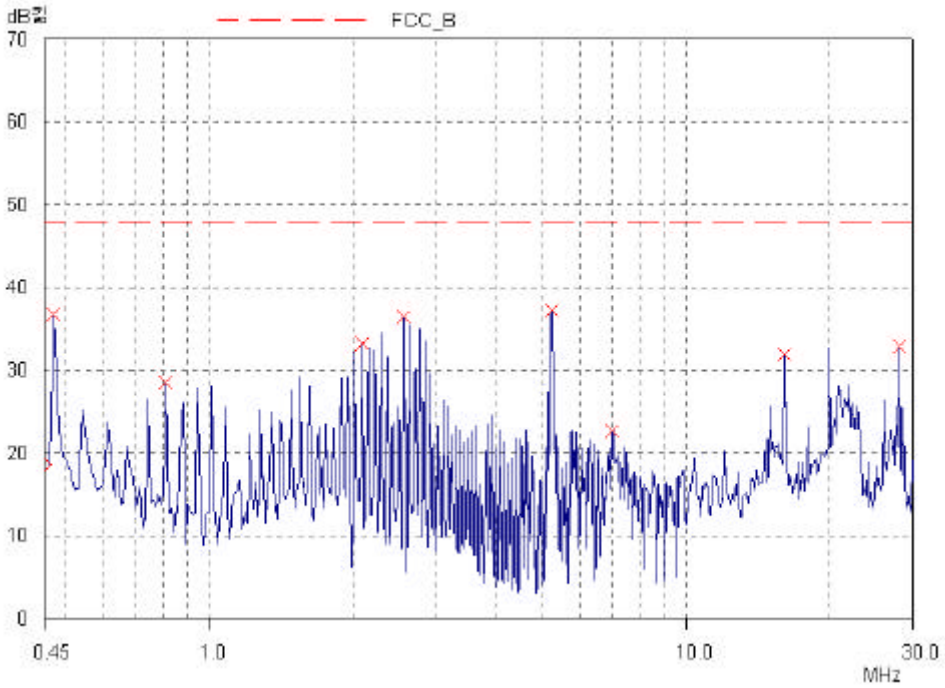

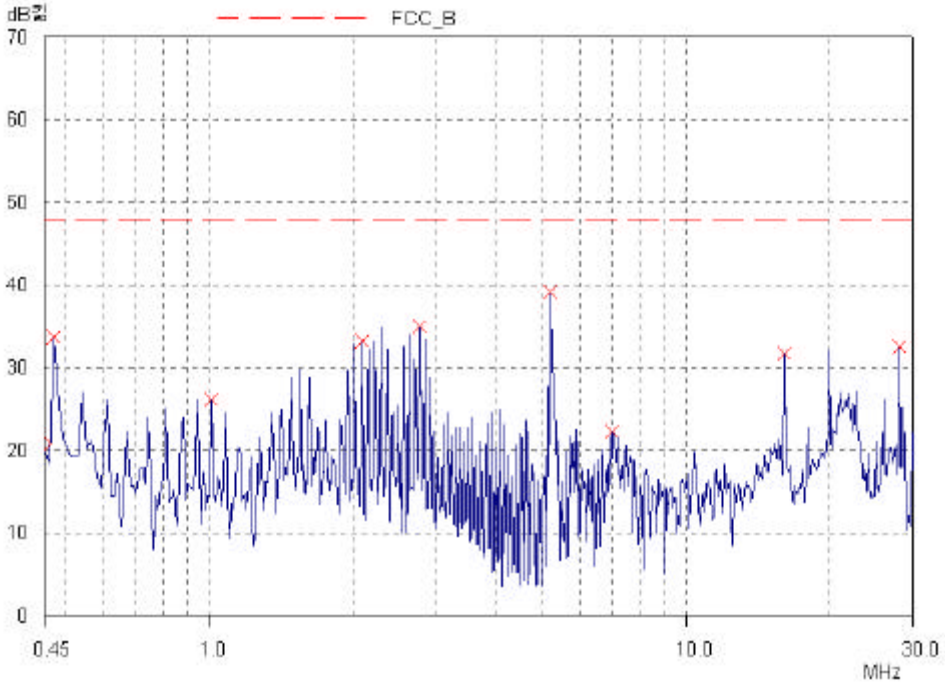

This Report shall not be reproduced except in full without the written approval of CERTiTEK
Form No.: CTK-FF1.1

Radiated Electric Field Emissions (Quasi-Peak reading)

Frequency [MHz]	Reading [dBuV/m]	Pol.	Height [m]	Correction Factor Antenna	Correction Factor Cable	Limits [dBuV/m]	Result [dBuV/m]	Margin [dB]
32.00	18.8	V	1.0	17.80	0.40	40.0	37.00	3.00
119.80	25.3	H	3.8	9.70	1.10	43.5	36.09	7.41
140.00	22.3	H	3.5	8.00	1.30	43.5	31.58	11.92
160.30	23.1	H	3.8	7.30	1.60	43.5	31.99	11.51
200.10	28.9	H	3.5	7.20	1.60	43.5	37.65	5.85
580.00	21.7	V	1.2	16.80	3.60	46.0	42.14	3.86
620.00	20.3	H	3.5	17.30	3.70	46.0	41.26	4.74
661.00	18.6	V	1.2	18.30	3.80	46.0	40.73	5.27

This Report shall not be reproduced except in full without the written approval of CERTiTEK
Form No.: CTK-FF1.1