BotCorp - Mobilacomm

Task ID
A5703

QA ID
II01D

SSMS A5703
Release 1.2
3 August 2001

Technical Report

Type Approval Procedures
and
Test Report

for the

SSMS Transceiver Model CT2A

Disclaimer

This document is provided solely for authorization purposes of this equipment with the Federal Communications Commission (FCC). This document is not intended as a commercial representation of this equipment and is not to be taken as guarantee of performance beyond the requirements of the FCC. BotCorp America, its divisions nor the author assumes liability with respect to any damages or loss incurred as a result of the use of the information contained in this publication.

Copyright Notice

This document contains proprietary intellectual property and/or confidential information. It has been prepared by BotCorp/Mobilacom and is provided to all outside parties for operational support purposes. Dissemination of the information contained in this document to a Third Party, by whatever means and in whatever form, for example by copying, reproduction in any form, direct distribution of original documents, requires written approval from the BotCorp - Mobilacomm

Contacting the Manufacturer

BotCorp Mobilacomm.

Technical Support

Address:	BotCorp - Mobilacomm 775 Main Street, Suite # 230 Buffalo, New York, USA 14203
Telephone:	(716) 842-1033
Fax:	(716) 842-1025
E-Mail:	Chris_Rampen@botcorp.com
Business Hours:	Monday-Friday, 9:00 – 17:00 Eastern Standard Time

Acknowledgments

This document was prepared by BotCorp - Mobilacomm for internal test purposes.

1. Prepared by: Cornel Gazdaru, P. Eng.
RF system engineer

2. Q.A. Review by: Chris Rampen, B.A. Hons
QA Manager

3. Technical Reviewed by: Roger Bot, P. Eng.
Vice president

4. Approved by: David Bot, P. Eng.
President

Distribution

Document Issued by:	C. Rampen	Purpose:	Type Approval
Distribution Media:	Hard Copy MS-Word / PDF optional	Restrictions: Positive Recall:	Distribution List Only Yes
Originating Organization(s)		*Receiving Organization(s)*	
BotCorp			
Edited by	C. Rampen		FCC
QA	B. Prescott		TMI Communications

Document Release History

Release	Date	Description	Org.
1.0	**2001-Jul-19**	**1st release**	**BotCorp/ Mobilacomm**
1.1	**2001-Jul-25**	**Document Review**	**BotCorp/ Mobilacomm**
1.2	**2001-Aug-03**	**Network Control test procedure reviewed**	**BotCorp/ Mobilacomm**

Table of Contents

1 SCOPE 1.1

1.1 DOCUMENT APPLICABILITY & OVERVIEW 1.1

2 TECHNICAL REPORT 2.2

2.1 NAME AND ADDRESS [2.1033 (C) (1)] 2.2
2.2 FCC IDENTIFIER [2.1033 (C) (2)] 2.2
2.3 INSTALLATION AND OPERATION MANUAL [2.1033 (C) (3)] 2.2
2.4 TYPE OF EMISSION [2.1033 (C) (4)] 2.2
2.5 FREQUENCY RANGE [2.1033 (C) (5)] 2.2
2.6 OPERATING POWER VALUE [2.1033 (C) (6)] 2.2
2.7 MAXIMUM POWER RATING [AS DEFINED IN PART 25 2.1033 (C) (7)] 2.2
2.8 DC VOLTAGES AND CURRENTS [2.1033 (C) (8)] 2.3
2.9 TUNE-UP PROCEDURES [2.1033 (C) (9)] 2.3
2.10 SCHEMATICS AND CIRCUIT DIAGRAMS [2.1033 (C) (10)] 2.3
2.11 NAMEPLATE LABEL PHOTOGRAPH [2.1033 (C) (11)] 2.3
2.12 EQUIPMENT PHOTOGRAPHS [2.1033 (C) (12)] 2.3
2.13 DIGITAL MODULATION SYSTEM [2.1033 (C) (13)] 2.3
2.14 REQUIRED MEASUREMENTS [2.1033 (C) (14)] 2.3

3 REQUIRED MEASURMENTS 3.4

3.1 GENERAL 3.4
3.2 ANTENNA 3.5
3.2.1 Gain, Directivity Pattern 3.5
3.3 TRANSMITTER 3.7
3.3.1 RF Power Output 3.7
3.3.2 Modulation Characteristics 3.10
3.3.3 Occupied Bandwidth 3.12
3.3.4 Spurious Emissions at Antenna Terminals 3.16
3.3.5 Field Strength of Spurious Radiation 3.30
3.3.6 Frequency Stability 3.32
3.3.7 Network Control Functions 3.35

4 NOTES 4.1

APPENDICES
Appendix A: Test Commands
Appendix B: Test Equipment Calibration Records

1 SCOPE

This document presents the technical report as specified in 47 CFR Ch1 $ 2.1033 (c) and describes the type test procedures required to validate operation of the SSMS Model CT2A transceiver. This type test is designed to satisfy the type approval requirements of the FCC.

1.1 Document Applicability & Overview

The following documents were used in the preparation of this document. The procedures described in this document are designed to satisfy the requirements described in the documents listed below:

FCC 47 CFR (Revised October 1, 2000), All applicable parts

2 TECHNICAL REPORT

2.1 Name and Address [2.1033 (c) (1)]

BotCorp - Mobilacomm
775 Main Street, Suite # 230
Buffalo, New York, USA 14203

2.2 FCC Identifier [2.1033 (c) (2)]

The FCC Identifier is 'PS5CT2A23'

2.3 Installation and Operation manual [2.1033 (c) (3)]

See Exhibit 10, "Installation and Operation Manual"

2.4 Type of Emission [2.1033 (c) (4)]

The transmit emission type is 5K40G7D
The mobile transceiver transmits a short burst of data at prescheduled intervals. The network system consists of multiple mobile transceivers Multiple mobile transceivers access the same channel through a time division multiplex access (TDMA) scheme.
The transmit time slots are preprogrammed in the mobile transceivers by the service provider. The end user cannot alter the pre-assigned transmit time slots.

2.5 Frequency Range [2.1033 (c) (5)]

The SSMS model CT2A terminal transmits in the frequency range 1631.5 to 1660.5 MHz.
The receiver frequency range is 1530 to 1559 MHz plus the GPS band (1574.4 to 1576.4 MHz)
The radio is programmed with pre-allocated frequency channels. The frequency channels are defined by the service provider (satellite operator). The channel allocation can only be modified by authorized personnel, under the supervision of the satellite operator. The mobile terminal selects the transmit channel depending on the availability of the network operation center generated forward link.

2.6 Operating Power Value [2.1033 (c) (6)]

The typical transmit power value at the transceiver TX port is 2.0 W [33 dBm].
The transmit power level is set at the factory, during manufacturing, and cannot be modified by the user.

2.7 Maximum Power Rating [as defined in part 25 2.1033 (c) (7)]

According to section 25.204(a), the EIRP transmitted in any direction towards the horizon shall not exceed 40 dBW.
The maximum EIRP, considering the maximum power transmitted 35 dBm + a maximum antenna gain of 7.5 dBi is 42.5 dBm = 12.5 dBW.

2.8 DC Voltages and Currents [2.1033 (c) (8)]

	Transmit mode		Receive mode		Battery Save mode	
DC Supply voltage	Max. Supply Current	Typical Supply Current	Max. Supply Current	Typical Supply Current	Max. Supply Current	Typical Supply Current
Regular 13.6 V	2.8 A	2.4 A	250 mA	200 mA	---	---
Battery 13.6 V	2.8 A	2.4 A	---	---	2 mA	1.4 mA

2.9 Tune-up Procedures [2.1033 (c) (9)]

The SSMS CT2A terminal operates at a factory preset power level. Before each transmission, the terminal calibrates the transmitted power according to the factory set level.
The power calibration is done on a short unmodulated carrier that precedes the data transmission (see modulating waveform graphs).

2.10 Schematics and Circuit Diagrams [2.1033 (c) (10)]

See Exhibit 6 and 7

2.11 Nameplate Label Photograph [2.1033 (c) (11)]

See Exhibit 3

2.12 Equipment Photographs [2.1033 (c) (12)]

See Exhibit 4

2.13 Digital Modulation System [2.1033 (c) (13)]

Return link (mobile terminal to satellite)
The SSMS mobile transceiver model CT2A transmits a BPSK modulation scheme, with a chip rate of 3600 bps. A convolutional code, rate 1/2, K=7 is used. The effective data rate is 1800 bps.
Only a short packet of data is sent during one transmission.

Forward link (satellite to mobile terminal)
The mobile terminal receives a differentially encoded BPSK modulation scheme. The chip rate is 3840 bps. A 15 bit PN sequence code and a convolutional, rate=1/2, K=7 code is added to the data. The effective data rate is 128 bps.

2.14 Required Measurements [2.1033 (c) (14)]

See Section 3 of this report.

3 REQUIRED MEASURMENTS

3.1 General

The performance of these test procedures requires that the SSMS Terminal be put into specific testing modes. To do this requires that the SSMS terminal be connected to a computer terminal via an RS-232 interface. The commands required to perform the various procedural steps are provided in Appendix A.

These tests are to be performed by qualified technicians with relevant experience in RF measurement. These tests should be carried out by a facility with a recognized Quality Assurance program (i.e. ISO 9000:1994).

The table below identifies the applicable sections of this document and its relationship between the Parts 2 and 25 requirements. The test results are appended to individual test sections.

Test Requirements Matrix

FCC Part 2 Section	FCC Part 25 Section	Test Description Summary	Section
N/A	N/A	Antenna Characteristics	2.2.1
2.1046	25.204	RF Power output	2.3.1
2.1047	N/A	Modulation Characteristics	2.3.2
2.1049	N/A	Occupied Bandwidth	2.3.3
2.1051 and 2.1057	25.202(f), 25.200(c) and 25.213(a)(b)	Spurious Emissions at Antenna Terminals	2.3.4
2.1053 and 2.1057	25.202(f), 25.200(c) and 25.213(a)(b)	Field Strength of Spurious Radiation	2.3.5
2.1055	25.202(e)	Frequency Stability	2.3.6
N/A	25.272(d)	Network Control Functions	2.3.7

3.2 Antenna

3.2.1 Gain, Directivity Pattern

Unit Under Test

Description	Mfg.	Model
L-Band Radio - Antenna	BotCorp - Mobilacomm	SSMSRP1

Calibrated Equipment Required/Used:

Equip. Description	Mfg.	Model #	Serial. #	Cal. #	Cal. Date
Spectrum Analyzer	Marconi	2393	23931022	47870	06/15/01
Test Range	see text	see text	see text	see text	see text
Signal Generator	Anritsu	MG3642A	MT86695	Anritsu	03/24/2000

Documents/Standards Required/Used:

Title	Version	Author	Publisher	Rel. Date
IEEE Standard Test Procedures for Antennas	ANSI/IEEE E 149-1979	N/A	IEEE	8/8/80

Environmental Conditions:
N/A

Purpose:
Measure the antenna gain and directivity pattern at the cable end at the frequencies listed below:

Specification:

1631.5-1660.5 MHz (Transmit) – attach patterns at 1631.5 MHz, 1646 MHz and 1660.5 MHz.
1530.0 – 1576 MHz (Receive) – attach patterns at 1530 MHz, 1545 MHz, 1559 MHz and 1575.4 MHz.
TX antenna gain is maximum 7.5 dBi

Equipment Set-up:
An outdoor test range is used to conduct these series of tests. This test requires a test range that has been characterized for the frequencies under test. The attached antenna test report details the test range set-up

Equipment Settings:
N/A

Procedure:
Procedure: as per ANSI/IEEE 149-1979 (See attached test report)

Test Status:

Test Conducted by...	Test Witnessed by....	Test Date	Test Status
Cornel Gazdaru	Chris Rampen	July 11-13, 2001	☒ Pass ☐ Fail

Results:

See antenna test report

3.3 Transmitter

3.3.1 RF Power Output

Unit Under Test

Description	Mfg.	Model	Serial #
L-Band Radio	BotCorp - Mobilacomm	SSMS Model CT2A	ESN 15400501

Calibrated Equipment Required/Used:

Equip. Description	Mfg.	Model #	Serial. #	Cal. #	Cal. Date
Spectrum analyzer	Marconi	2393	23931022	47870	06/15/01
Power meter Power probe	Anritsu Wiltron	2438A MA2472	N/A 970326	N/A Anritsu	N/A 05/12/2000
Test cable	Semflex	HPT-160, 24”	N/A	N/A	N/A

Documents/Standards Required/Used:

Title	Version	Author	Publisher	Rel. Date
See Section 3.1	--	--	--	--

Environmental Conditions:

Temperature (ºC)	Power supply
20	Nominal Vdc= 13.6 V

Purpose:
To verify the maximum transmitted power at the antenna flange.

Specifications:
Maximum 35 dBm

Equipment Set-up:

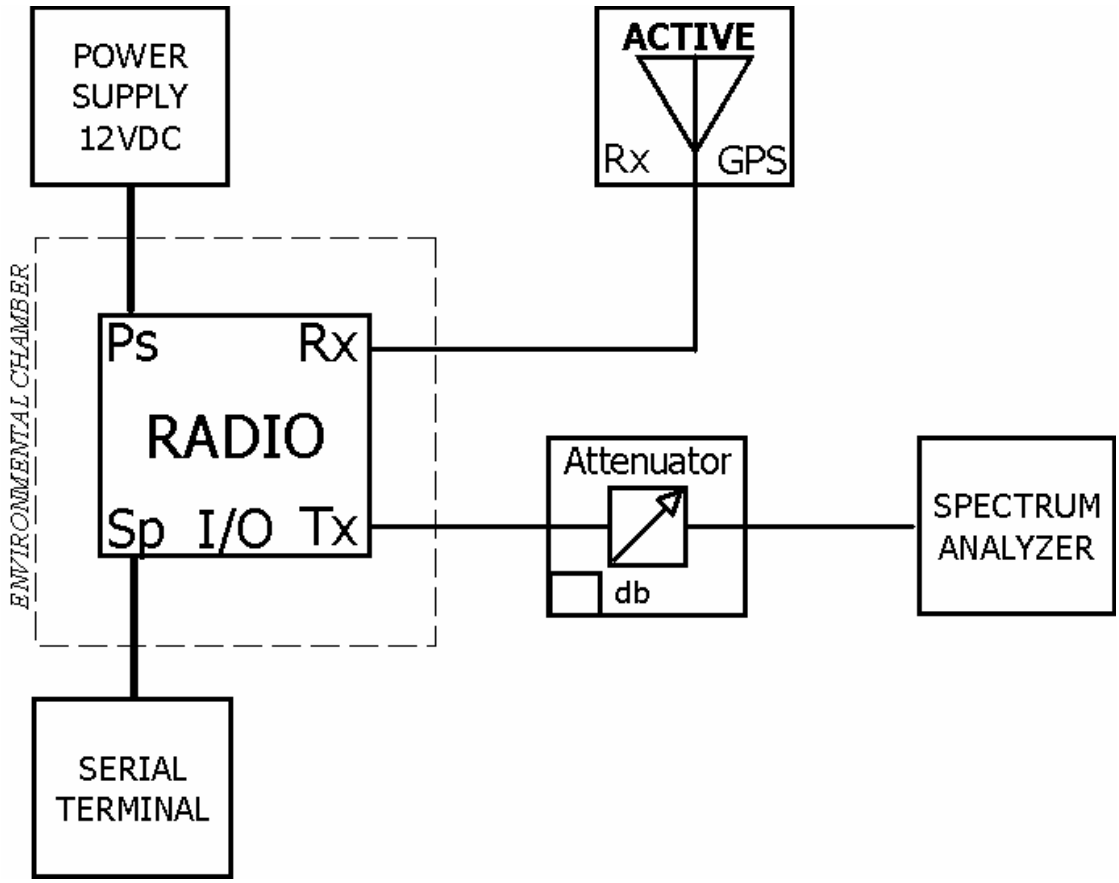

Note: In the above setup the attenuator is a calibrated 30 dB attenuator for the spectrum analyzer.
Note: The power meter is connected instead of the spectrum analyzer. A calibrated 30 dB calibrated attenuator is used.
The test cable attenuation is 0.35 dB at the transmit frequency.

Equipment Settings:

N/A

Procedure:

1. Put the SSMS terminal in test mode.
2. Set the SSMS terminal to use channel S0.
3. Command the SSMS terminal to transmit an un-modulated carrier for 2 seconds.
4. Record the transmitted power with the power meter and the spectrum analyzer

Test Status:

Test Conducted by...	Test Witnessed by....	Test Date	Test Status
Cornel Gazdaru	Chris Rampen	July 17, 2001	☒ Pass ☐ Fail

Results:

The radio is tuned once during the manufacturing. The power level is set in the radio and cannot be modified other than by authorized technical personnel. The power level for the radio under test has been calibrated prior to the test. The radio calibrates its power according to the set level, at the beginning of each transmission, on the initial unmodulated burst.
TEST RESULT:
power reading = 33.5 dBm
TX power = 33.5 dBm + 0.35 dB (test cable loss) = 33.85 dBm
There is no separate DC power for the final amplifier. The mobile terminal is an integrated unit.
Current consumption was recorded during transmission ad different DC voltage levels.
DC voltage = 10.5 V Supply current (during TX) = 2.5 A
DC voltage = 13.6 V Supply current (during TX) = 2.4 A
DC voltage = 18.0V Supply current (during TX) = 2.3 A

3.3.2 Modulation Characteristics

Unit Under Test

Description	Mfg.	Model	Serial #
L-Band Radio	BotCorp - Mobilacomm	SSMS Model CT2A	ESN 15400501

Calibrated Test Equipment Required/Used:

Equip. Description	Mfg.	Model #	Serial. #	Cal. #	Cal. Date
Oscilloscope	Tektronix	TDS 360	B013260	Jola 42639	08/18/2000

Documents/Standards Required/Used:

Title	Version	Author	Publisher	Rel. Date
None quoted				

Environmental Conditions:

Temperature (ºC)	Power supply
20º	Nominal Vdc = 13.6 V

Purpose:
Define the digital modulating waveform for the terminal

Specifications:
Attach modulated waveform graphs

Equipment Set-up:
Access to the IF digital modem output test port inside the terminal is required.
A terminal from production and testing phase has been used to record the waveform

Equipment Settings:

TEST INSTRUMENT		
Oscilloscope		
FUNCTION	**SETTING**	**UNITS**
Time	100 us /div	
Amplitude	1 V /div	
Coupling	AC	

Procedure:
N/A

Test Status:
Pass: see plots below

Test Conducted by...	Test Witnessed by....	Test Date	Test Status
Roger Bot	Cornel Gazdaru	July 17, 2001	☒ Pass ☐ Fail

Results:

Two waveforms are attached.
First waveform represents the beginning of the transmitted burst. The initial unmodulated carrier is used for power calibration (according to the set level)
Second waveform represents a typical modulated waveform during data transmission.
For both waveforms, the modulating envelope represents the chip rate = 3600 bps.

Modulated waveform - initial burst

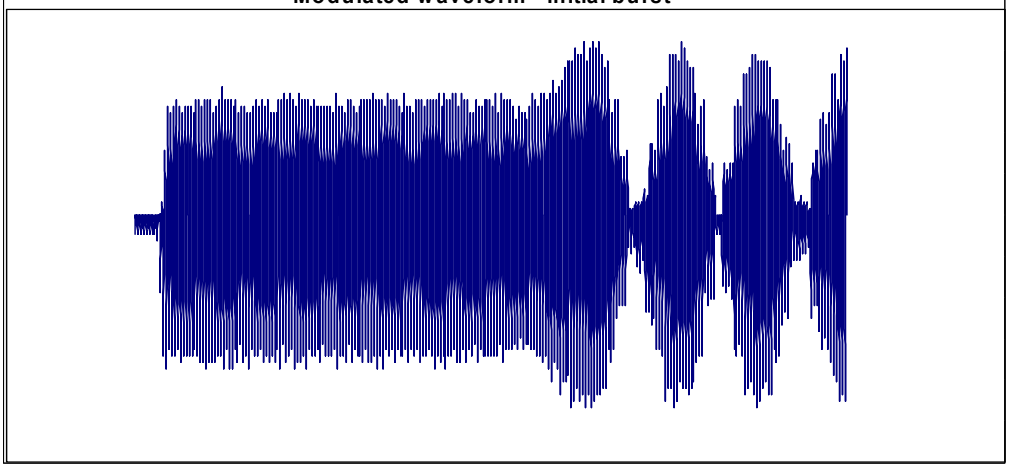

Modulated waveform - typical data

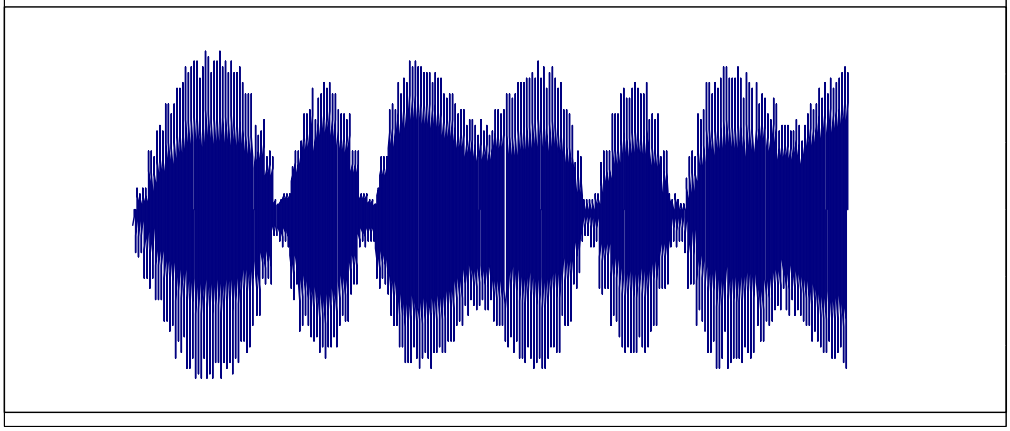

3.3.3 Occupied Bandwidth

Unit Under Test

Description	Mfg.	Model	Serial #
L-Band Radio	BotCorp - Mobilacomm	SSMS Model CT2A	ESN 15400501

Calibrated Test Equipment Required/Used:

Equip. Description	Mfg.	Model #	Serial. #	Cal. #	Cal. Date
Spectrum analyzer	Marconi	2393	23931022	47870	06/15/01

Documents/Standards Required/Used:

Title	Version	Author	Publisher	Rel. Date
See Section 3.1	--	--	--	--

Environmental Conditions:

Temperature (ºC)	Power supply
20º	Nominal Vdc = 13.6 V

Purpose:
Measure the occupied bandwidth

Specifications:
Attach spectrum plots. Occupied bandwidth is 5.4 kHz as per emission designation (5K40G7D)

Equipment Set-up:
The radio is set to transmit on channel S0 bottom of the band, S3 middle of the band and S5 at the top of the band.
The radio is programmed with pre-allocated frequency channels.

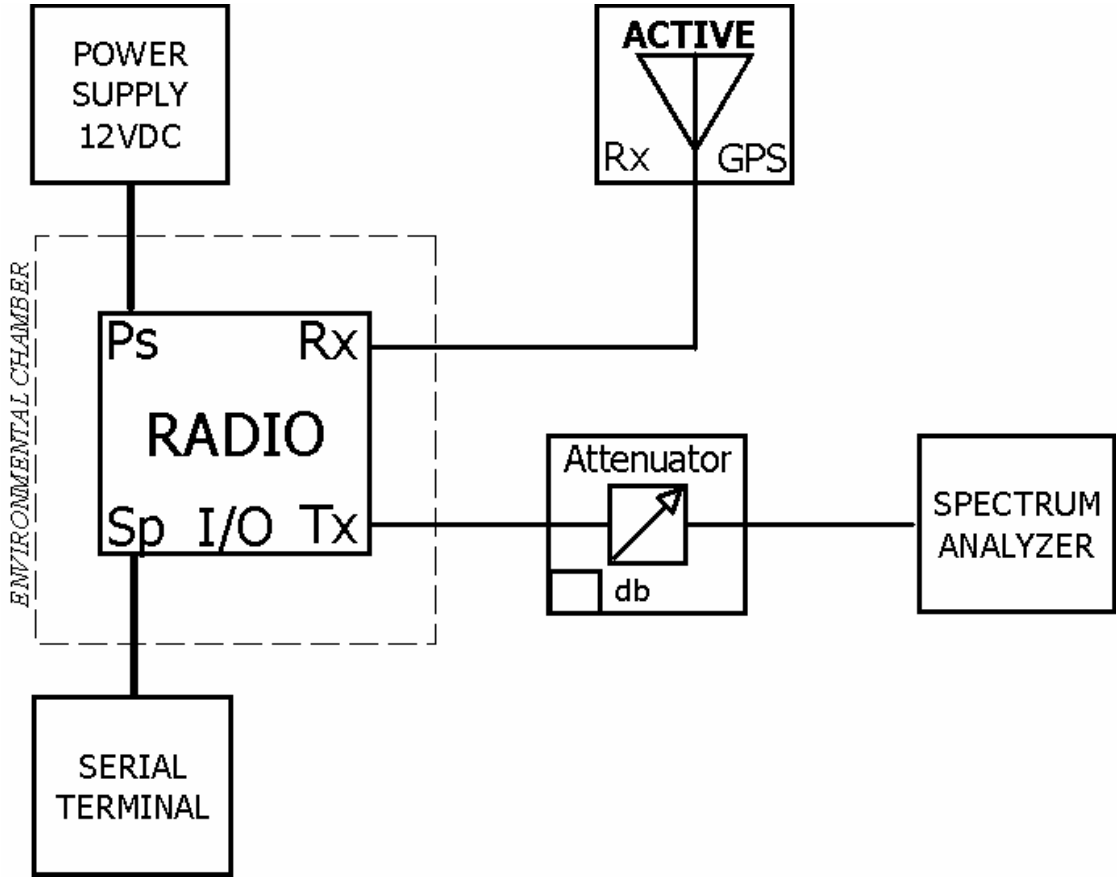

Equipment Settings:

TEST INSTRUMENT		
SPECTRUM ANALYSER		
FUNCTION	**SETTING**	**UNITS**
CENTER FREQUENCY	Channel frequency	MHz
SPAN	3 kHz/div	KHz/dBW
BANDWIDTH	300 Hz	KHz
VIDEO BANDWIDTH	NONE	KHz
ATTENUATOR	30 dB + external 30 dB	dB
SCALE	10 dB/div	dB
REFERENCE LEVEL	5 dBm	
SWEEP TIME	50 msec	s
Observations: Set the Spectrum analyzer in peak hold mode.		

Procedure:

1. Put the SSMS in test mode.
2. Allow the SSMS to acquire GPS signal.
3. Perform frequency calibration.
4. Set the SSMS terminal to use channel S0 (1633MHz).
5. Command the SSMS terminal to transmit a modulated carrier for 2 seconds.
6. Record the spectrum plot.
7. Repeat the measurement for channels S3 (1649MHz), S5 (1659MHz)

Test Status:

Test Conducted by...	Test Witnessed by....	Test Date	Test Status
Cornel Gazdaru	Chris Rampen	July 17, 2001	☒ Pass ☐ Fail

Results:

The emission designator is 5K40G7D
A mobile transceiver transmits a short burst of data at prescheduled time intervals. Multiple mobile transceivers access the same channel through a time division multiplex access (TDMA) scheme.
The authorized bandwidth is 6 kHz
The measured occupied bandwidth, defined as the bandwidth that contains 99% of the signal power, is 5.4 kHz
The results were recorded with the terminal at its factory set power level (33.85 dBm)
Spectrum plots are attached, for the terminal tuned at the bottom, middle and top of the band.
The measurement bandwidth is 300 Hz.

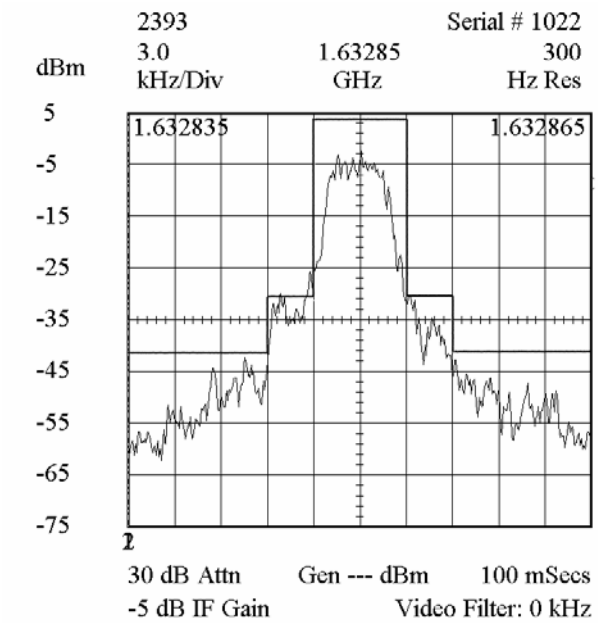

Figure 1. Occupied bandwidth - radio transmits on channel S0

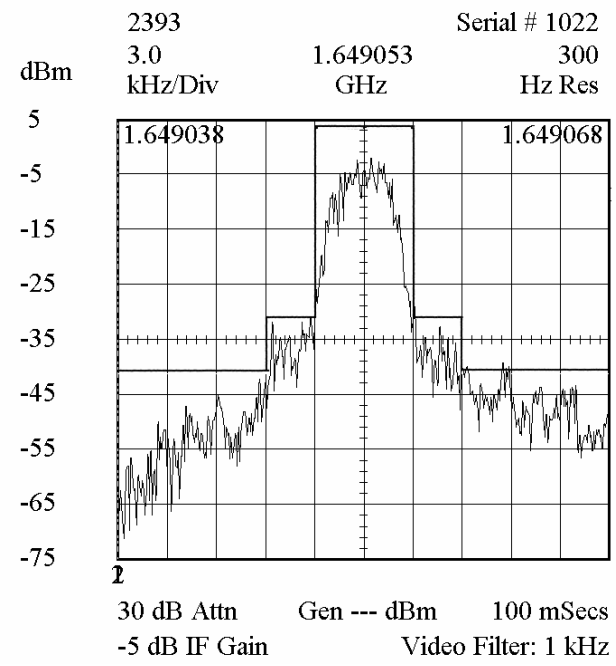

Figure 2. Occupied bandwidth - radio transmits on channel S3

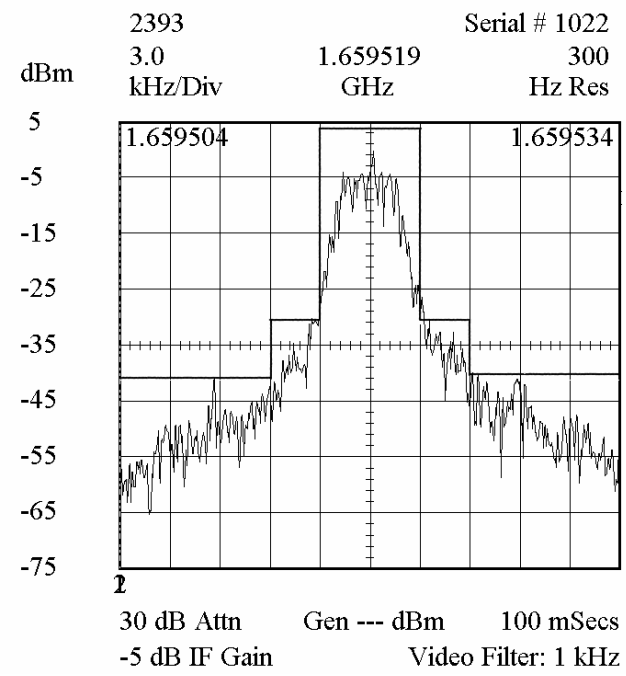

Figure 3. Occupied bandwidth - radio transmits on channel S5

3.3.4 Spurious Emissions at Antenna Terminals

Unit Under Test

Description	Mfg.	Model	Serial #
L-Band Radio	BotCorp - Mobilacomm	SSMS Model CT2A	ESN 15400501

Calibrated Equipment Required/Used:

Equip. Description	Mfg.	Model #	Serial. #	Cal. #	Cal. Date
Spectrum analyzer	Marconi	2393	23931022	47870	06/15/01
Test cable	Semflex	HPT-160, 24 “	N/A	N/A	N/A

Documents/Standards Required/Used:

Title	Version	Author	Publisher	Rel. Date
See Section 3.1	--	--	--	--

Environmental Conditions:

Temperature (ºC)	Power supply
20	Nominal Vdc = 13.6 V

Purpose:
To measure the unwanted emissions, while the SSMS terminal transmits a modulated signal.

Specification:
FCC requirements in 25.200, 25.202(f) and 25.213(a)(b)
Where no specifications have been identified in part 25, measuring bandwidth has been indicated in the results section and spectrum plots and/or tabular results specified.

Emission table based on 25.202(f).

Frequency offset from center frequency (kHz)	Mean power of emissions bellow the mean output power of the transmitter
0 to 3 kHz	0 dBc
3 kHz to 9 kHz	-25 dBc in any 4 kHz
9 kHz to 15 kHz	-35 dBc in any 4 kHz
> 15 kHz	- 43 dBW in any 4 kHz

Emission table based on 25.200(c), 25.213(b)

Frequency band	Mean power of emissions
1559 MHz – 1605 MHz	-70 dBW / 1 MHz -80 dBW discrete spurs

In addition the terminal is verified against the following emission limitations (based on the European standard EN 301 681 [2001-01])

Frequency	Measurement bandwidth	Emission limit (EIRP)
30 – 1000 MHz	100 kHz	-66 dBW
1000 – 1559 MHz	1 MHz	-61 dBW
1559 – 1605 MHz	1 MHz	-70 dBW -80 dBW discrete spurs
1605.0 – 1612.5 MHz	1 MHz	-70 to –58.5 dBW (linear interpolated)
1612.5 – 1616.5 MHz	1 MHz	-55 to –50 dBW (linear interpolated)
1616.5 – 1621.5 MHz	1 MHz	-50 to –46 dBW (linear interpolated)
1621.5 – 1624.5 MHz	30 kHz	-60 dBW
1624.5 –1626.5 MHz	30 kHz	-60 to -40 dBW
1626.5 – 1660.6 MHz	N/A	N/A
1660.5 – 1662.5 MHz	30 kHz	-55 dBW
1662.5 – 1665.5 MHz	30 kHz	-60 dBW
1665.5 – 1670.5 MHz	100 kHz	-60 dBW
1670.5 – 1680.5 MHz	300 MHz	-60 dBW
1680.5 –1690.5 MHz	1 MHz	-60 dBW
1690.5 – 2250.0 MHz	3 MHz	-60 dBW
2250.0 – 12750 MHz (excluding harmonics)	3 MHz	-60 dBW

The harmonics emissions meet or exceed the following table.
The emissions are in one and only one 300 kHz bandwidth.

Frequency	Measurement bandwidth	Emission limit (EIRP)
3263.0 – 3321.0 MHz	300 kHz	-38 dBW (the FCC limit of - 43 dBW applies)
4894.5 – 4981.5 MHz	300 kHz	- 48 dBW
6526.0 – 6642.0 MHz	300 kHz	-48 dBW
8175.5 – 8302.5 MHz	300 kHz	-48 dBW
9789.0 – 9963.0 MHz	300 kHz	-59 dBW

Equipment Set-up:

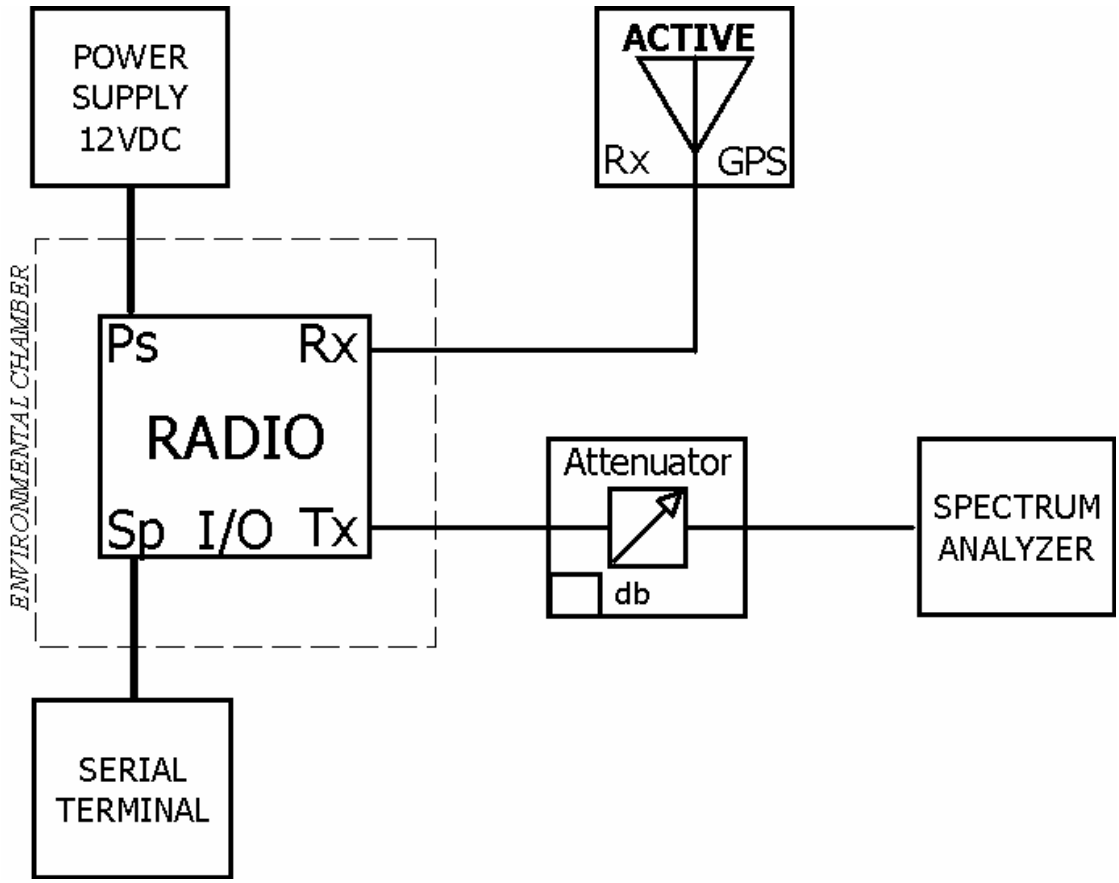

Equipment Settings:
The attenuator used is a calibrated 30 dB attenuator. The readings are thus easily converted from dBm to dBW. Special consideration is given to identify and avoid spurious signals generated by the spectrum analyzer, due to the relative high input power level.

Procedure:
1. Put the SSMS terminal in test mode.
2. Allow the SSMS Terminal to acquire GPS signal.
3. Command the SSMS terminal to perform a frequency calibration
4. Set the SSMS terminal to transmit at on channel S1 (1633MHz)
5. Command the SSMS terminal to transmit a modulated carrier for 2 seconds.
6. Conduct a search for noise and spurs noting any noise and spurs that fall outside the specifications above*, allow at least 15 seconds between transmission.
7. Repeat the test with the SSMS terminal set to transmit on channel S3 (1649MHz) and S5 (1659 MHz).

* The search for noise and spurs can be conducted using an un-modulated carrier, however the recorded data will be performed with a modulated signal, and using the specified bandwidth, or the closest bandwidth the spectrum analyzer can be set at, and using numerical integration to convert the noise density. Where no specifications have been identified, the measuring bandwidth and the frequency bands are identified in the test results. The specification for a noise and spurious at an offset greater than 15 kHz from the channel frequency is –43 dBW/4 kHz. A larger bandwidth may be used to investigate the spectrum, and only if the integrated noise level is above –43 dBW, the span will be

reduced to the region of interest and the measurement redone with the bandwidth closest to 4 kHz. Spectrum plots are attached for the frequency bands in which noise and spurs are observed. If in a certain frequency band, no noise and spurs is recorded during a transmission, it shall be noted in the test report.

In band emissions (1631.5 to 1660.5 MHz) are recorded with different settings of the frequency span, and resolution bandwidth. Spectrum plots are attached. The band 1605 to 1631.3 Mhz and 1660.5 to 2250 MHz is investigated with different frequency span settings and resolution bandwidths. Results detailing the resolution bandwidth are presented in the test report in tabular format, and as spectrum plots for a larger frequency span.

Test Status:

Test Conducted by...	Test Witnessed by....	Test Date	Test Status
Cornel Gazdaru	Chris Rampen	July 17, 2001	☒ Pass ☐ Fail

Results:

The attached spectrum plots detail the spectrum analyzer settings and the test results. Where no spurious and no noise has been measured, the spectrum plot has not been added, instead only the test result stated.
The Spectrum plots are labeled in dBm. Taking into account the 30 dB attenuator connected at the output of the terminal, the readings are readily converted to dBW units

10 MHz to 1559 MHz Measuring bandwidth: 120 kHz
Generated Noise and spurs < - 70 dBW/120 kHz

1559 MHz to 1605 MHz Measuring bandwidth: 1 MHz
Generated Noise: < - 70 dBW/1 MHz Spectrum plot attached in figure 4
Discrete Spurs: < - 80 dBW A search for discrete spurs has been conducted in span segments of 2 MHz. No discrete spurs above – 80 dBW have been measured.

The measured noise and spurious emissions generated in the segment 1605.0 – 1626.5 MHz is summarized below.

Frequency band (start/stop)	Measuring bandwidth	Maximum recorded level		
		TX on S1	TX on S3	TX on S5
1605.0 – 1612.5 MHz	1 MHz	-70 dBW	-73 dBW	-73 dBW
1612.5 – 1616.5 MHz	1 MHz	-64 dBW	-65 dBW	-70 dBW
1616.5 – 1621.5 MHz	1 MHz	-58 dBW	-62 dBW	-63 dBW
1621.5 – 1624.5 MHz	30 kHz	-70 dBW	-76 dBW	-77 dBW
1624.5 –1626.5 MHz	30 kHz	-68 dBW	-76 dBW	-77 dBW

The in-band emissions measurements, and adjacent channel power, using different frequency spans and with the terminal set to transmit on channel S1, S3 and S5, are attached in figures 5 to 12.

The measured noise and spurious emissions generated in the segment 1660.5 – 2250 MHz is summarized below. Spectrum plots attached in figures 13 to 15

Frequency band (start/stop)	**Measuring bandwidth**	**Maximum recorded level**		
		TX on S1	TX on S3	TX on S5
1660.5 – 1662.5 MHz	30 kHz	-66 dBW(spur)	-75 dBW	-72 dBW
1662.5 – 1665.5 MHz	30 kHz	-74 dBW	-72 dBW (spur)	-68 dBW
1665.5 – 1670.5 MHz	120 kHz	-70 dBW	-71 dBW	-64 dBW
1670.5 – 1680.5 MHz	300 kHz	-67 dBW	-67 dBW	-65 dBW
1680.5 –1690.5 MHz	1 MHz	-69 dBW	-69 dBW	-67 dBW
1690.5 – 2250.0 MHz	1 MHz	-74 dBW	-74 dBW	-70 dBW

In the band 2250 – 10 GHz, only harmonic emission have been measured above the analyzer noise floor -80 dBW/1 MHz.
Spectrum plots attached in figures 16 to 20.

Frequency band (start/stop)	**Measuring bandwidth**	**Harmonic level**
3263.0 – 3321.0 MHz	300 kHz	- 65 dBW
4894.5 – 4981.5 MHz	300 kHz	- 58 dBW
6526.0 – 6642.0 MHz	300 kHz	-65 dBW
8175.5 – 8302.5 MHz	300 kHz	-70 dBW
9789.0 – 9963.0 MHz	300 kHz	-72 dBW

In the band 10 GHz to 16.6 GHz, (measuring bandwidth: 1 MHz) no emissions and no harmonics have been recorded above the spectrum analyzer noise floor -75 dBW/1MHz.

The test cable frequency response, based on the manufacturer's data sheet is:

Freq	**Attenuation**
1.0 GHz	0.3 dB
2.5 GHz	0.4 dB
5.0 GHz	0.6 dB
10 GHz	0.9 dB
15 GHz	1.0 dB
20 GHz	1.2 dB

The coaxial cable that connects the mobile transceiver's antenna to the terminal's port has higher losses vs. frequency compared to the test cable.

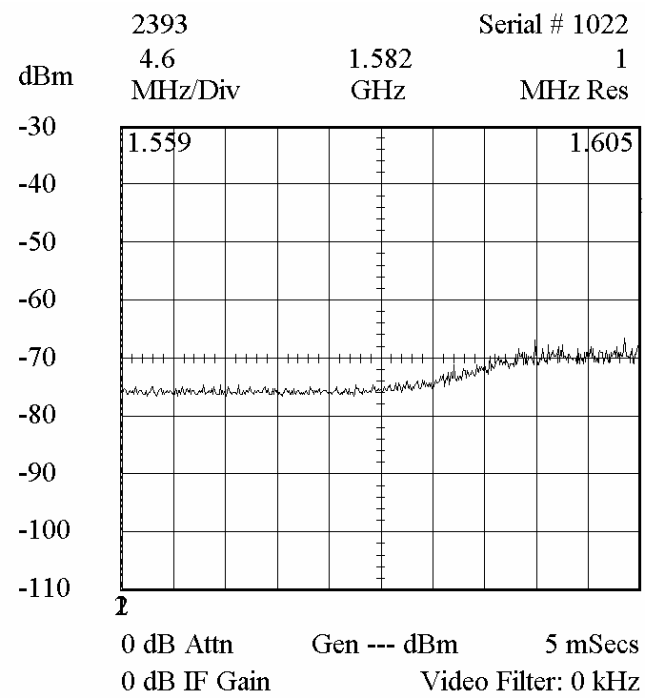

Figure 4. 1559 – 1605 MHz band. RBW = 1 MHz. TX on channel S1 (bottom of the band, worst case)

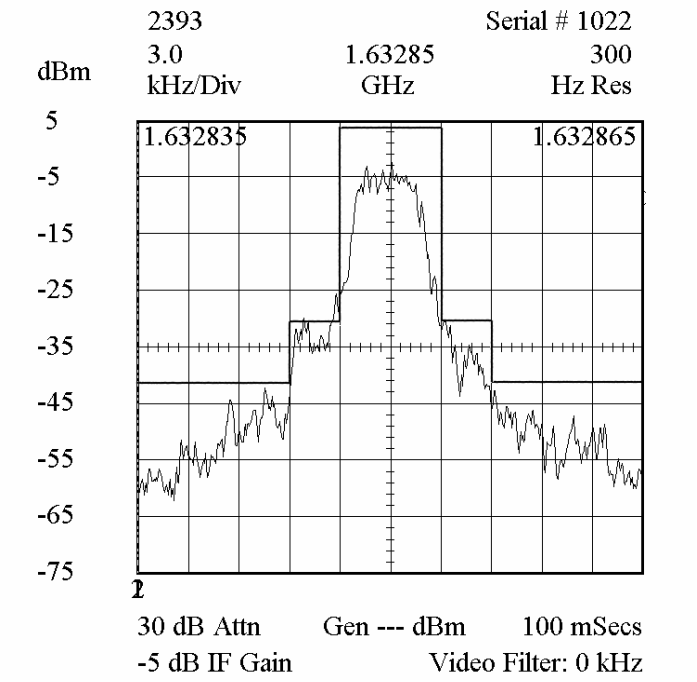

Figure 5. Adjacent channel power emissions, with 25.202(f) mask. The mask has been translated from 4 kHz bandwidth to 300 Hz, the measurement bandwidth. TX on channel S1.

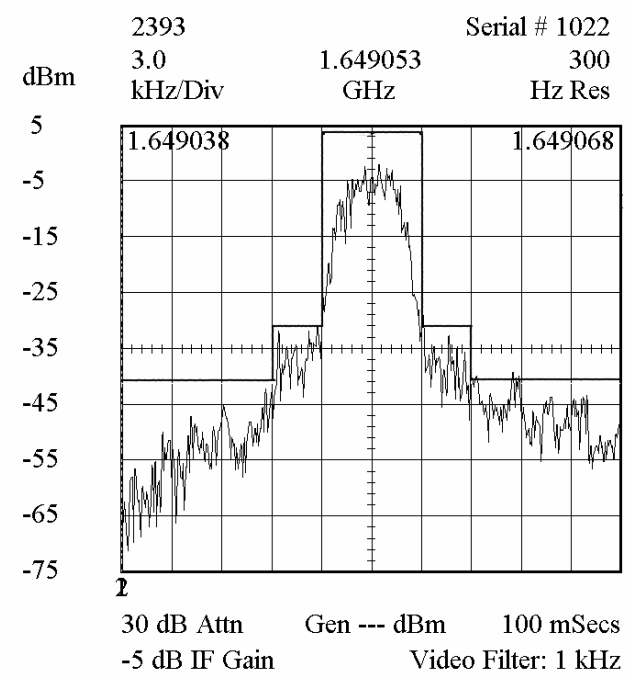

Figure 6. Adjacent channel power emissions, with 25.202(f) mask. The mask has been translated from 4 kHz bandwidth to 300 Hz, the measurement bandwidth. TX on channel S3.

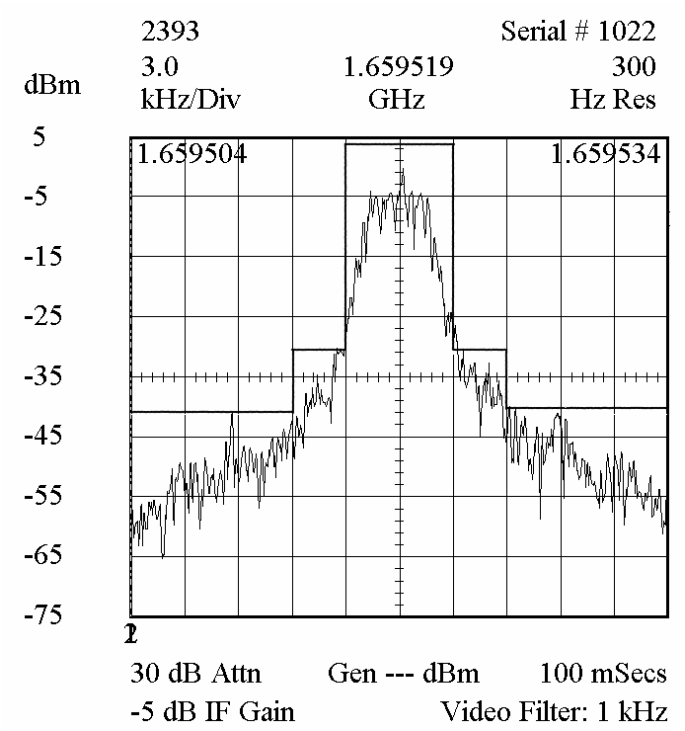

Figure 7. Adjacent channel power emissions, with 25.202(f) mask. The mask has been translated from 4 kHz bandwidth to 300 Hz, the measurement bandwidth. TX on channel S5.

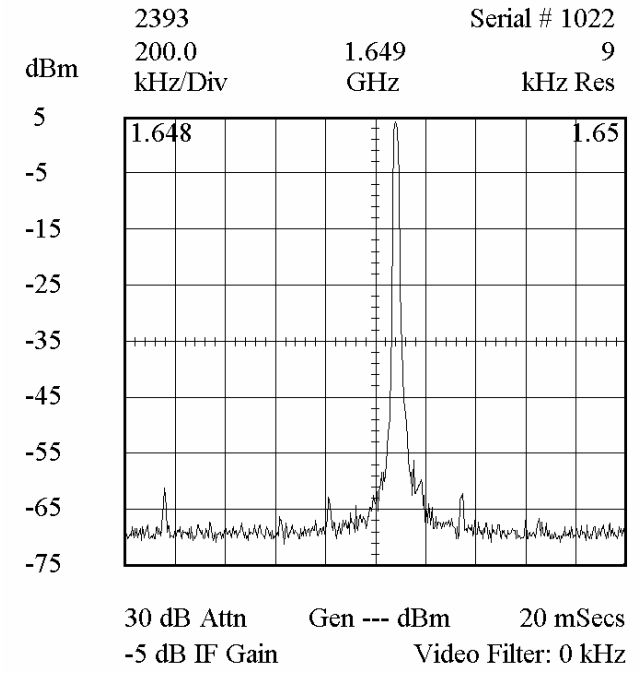

Figure 8. In band emissions. Span = 200 kHz/div. RBW = 9 kHz

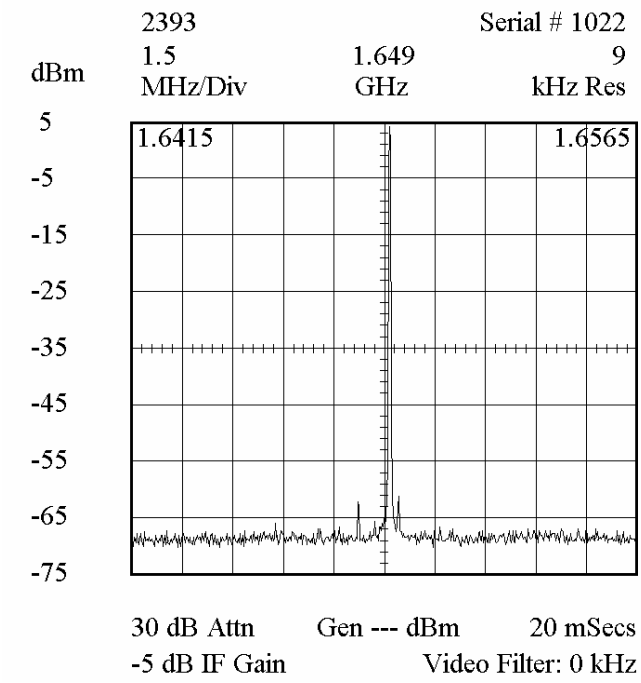

Figure 9. In band emissions. Span = 1.5 MHz/div. RBW = 9 kHz

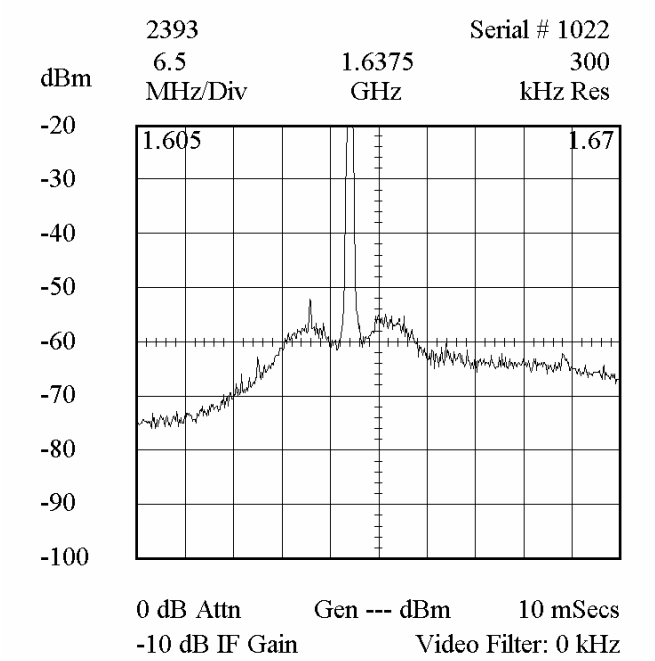

Figure 10. Noise and spurious emissions. Start frequency = 1605 MHz. Stop frequency = 1670 MHz RBW = 300 kHz. TX on channel S1.

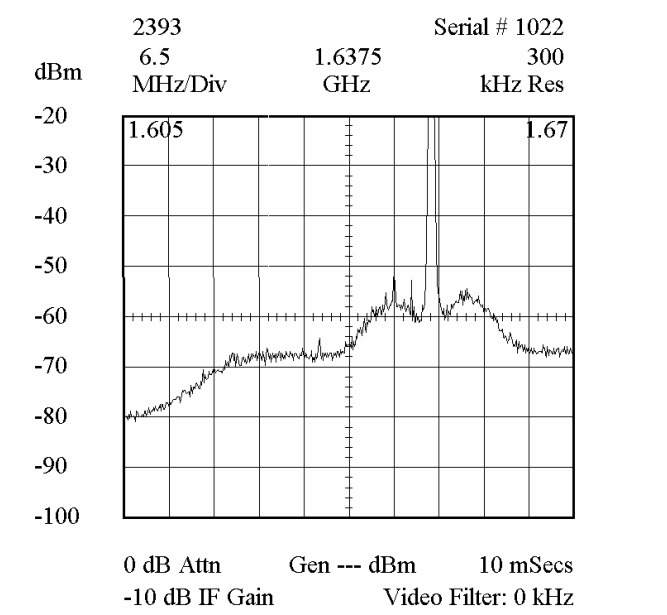

Figure 11. Noise and spurious emissions. Start frequency = 1605 MHz. Stop frequency = 1670 MHz RBW = 300 kHz. TX on channel S3.

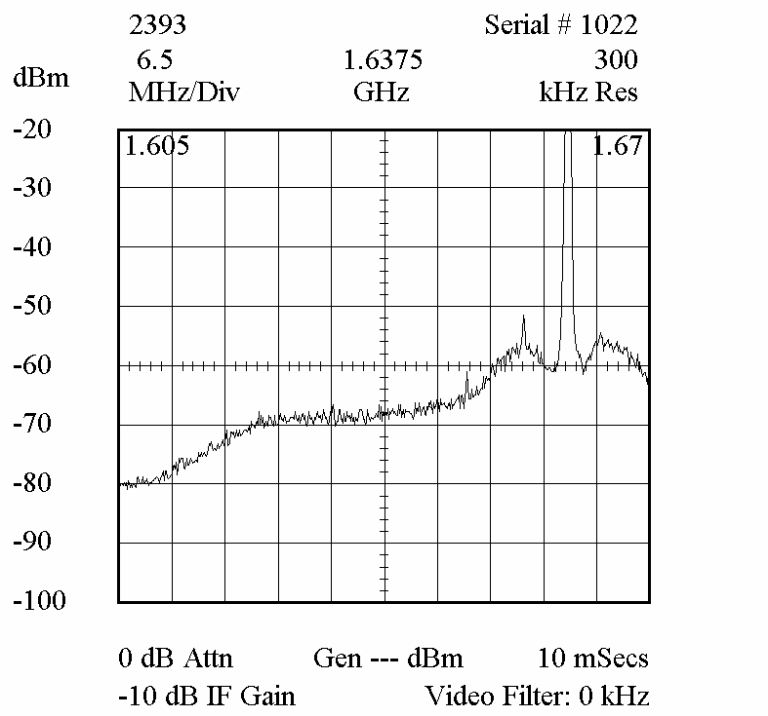

Figure 12. Noise and spurious emissions. Start frequency = 1605 MHz. Stop frequency = 1670 MHz RBW = 300 kHz. TX on channel S5.

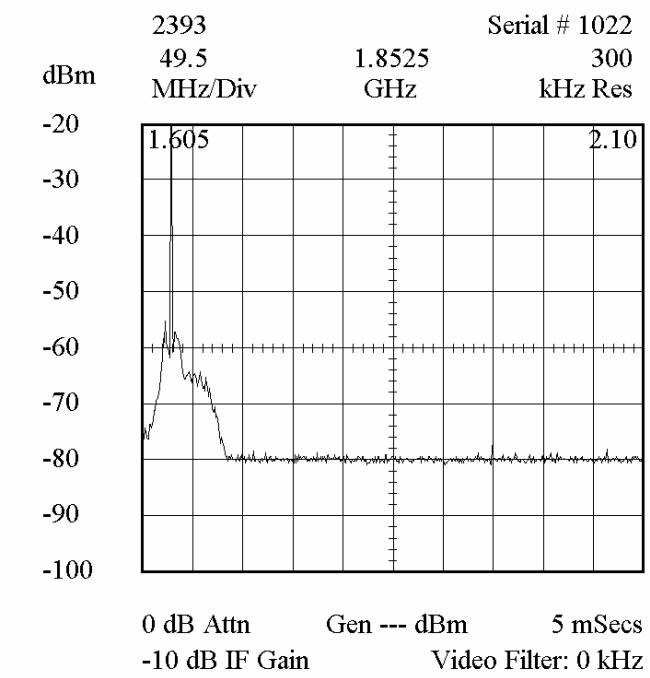

Figure 13. Noise and spurious emissions. Start frequency = 1605 MHz. Stop frequency = 2100 MHz RBW = 300 kHz. TX on channel S1.

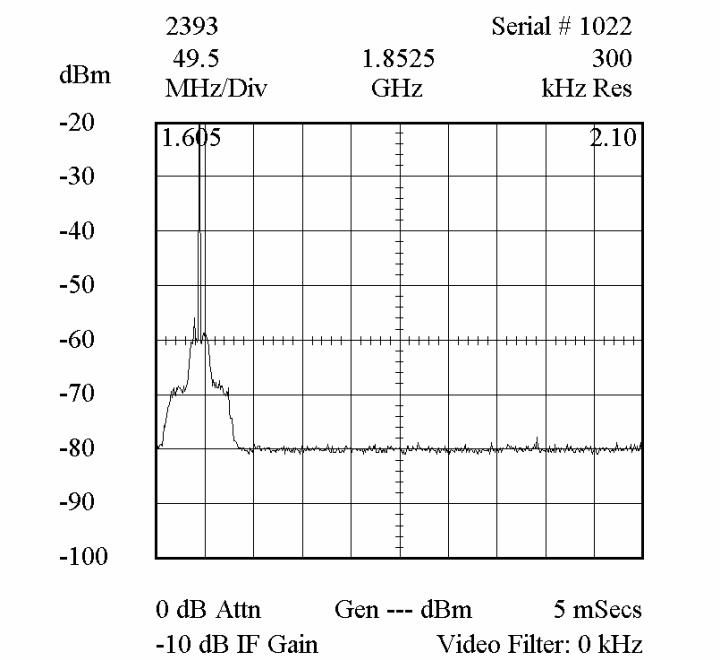

Figure 14. Noise and spurious emissions. Start frequency = 1605 MHz. Stop frequency = 2100 MHz RBW = 300 kHz. TX on channel S3.

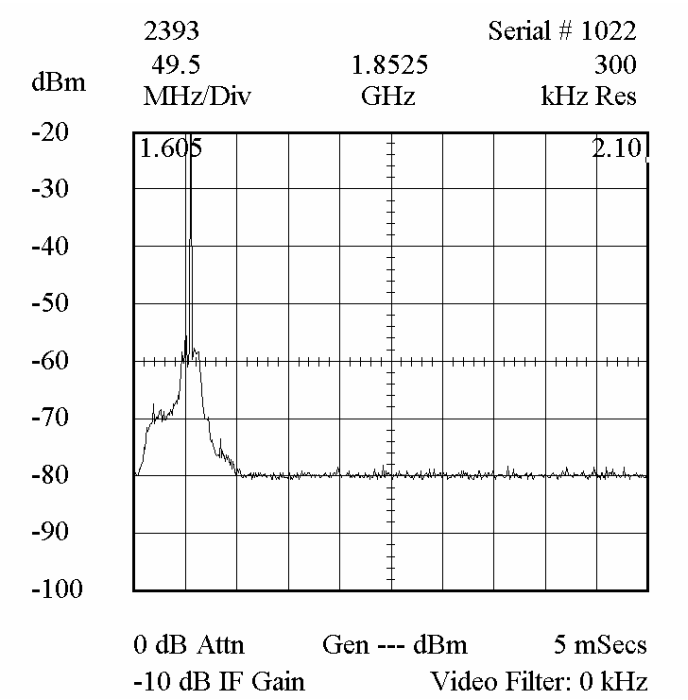

Figure 15. Noise and spurious emissions. Start frequency = 1605 MHz. Stop frequency = 2100 MHz RBW = 300 kHz. TX on channel S5.

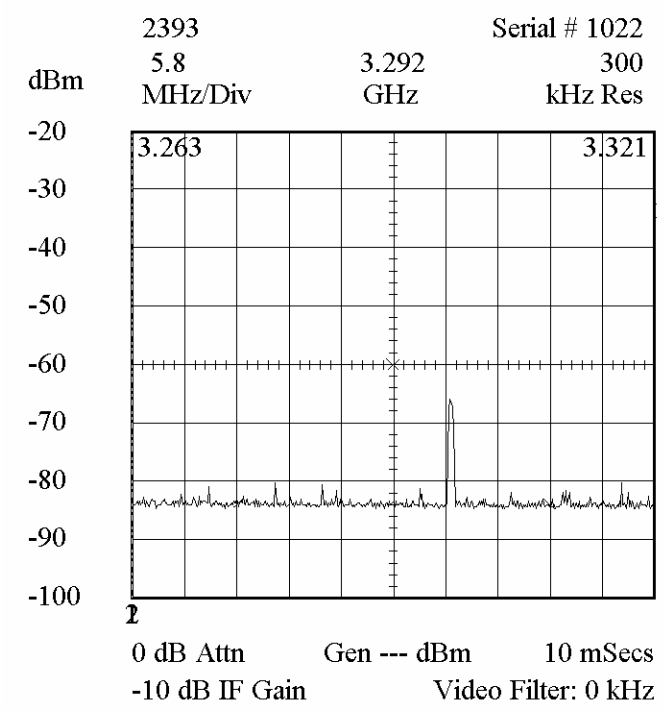

Figure 16. Harmonic emissions in the band 3263.0 – 3321.0 MHz. RBW = 300 kHz

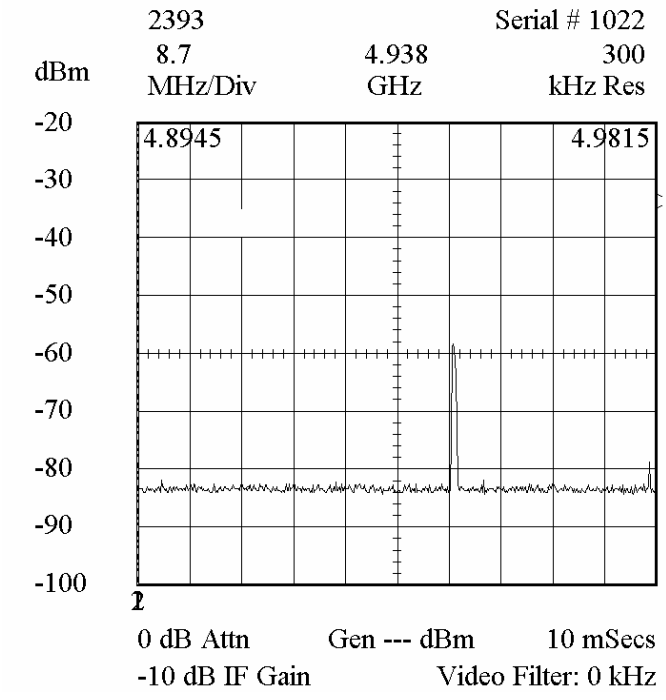

Figure 17. Harmonic emissions in the band 4894.5 – 4981.5 MHz. RBW = 300 kHz

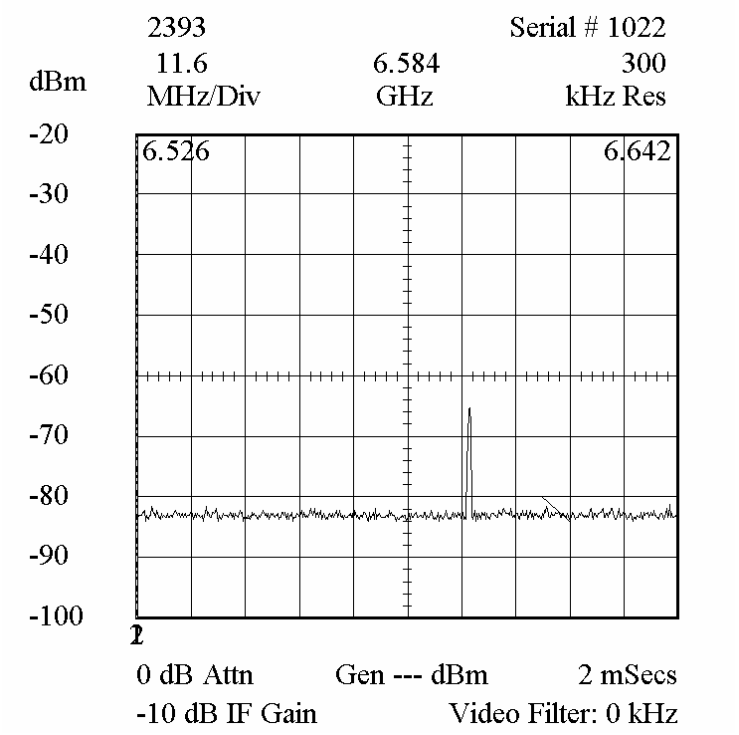

Figure 18. Harmonic emissions in the band 6526.0 – 6642.0 MHz. RBW = 300 kHz

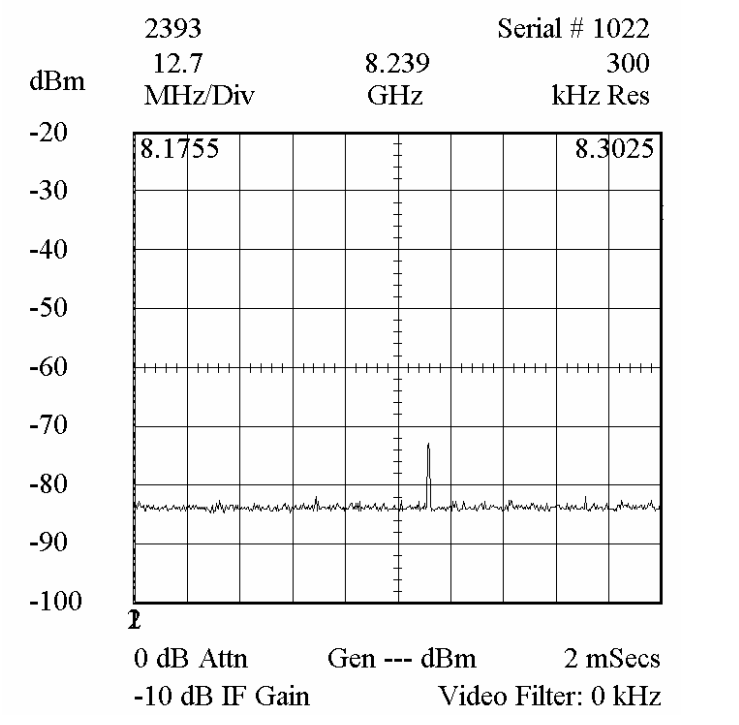

Figure 19. Harmonic emissions in the band 8175.5 – 8302.5 MHz. RBW = 300 kHz

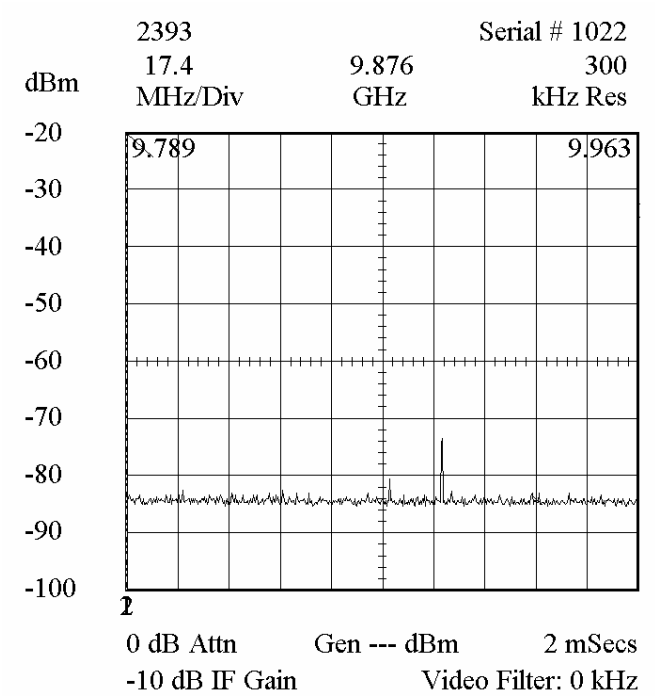

Figure 20. Harmonic emissions in the band 9789.0 – 9963.0 MHz. RBW = 300 kHz

3.3.5 Field Strength of Spurious Radiation

Unit Under Test

Description	Mfg.	Model	Serial #
L-Band Radio	BotCorp - Mobilacomm	SSMS Model CT2A	ESN 15400501

Calibrated Equipment Required/Used:

Equip. Description	Mfg.	Model #	Serial. #	Cal. #	Cal. Date
Spectrum analyzer	Marconi	2393	23931022	47870	06/15/01
Conical log-spiral antenna	EMCO	3102L	N/A	N/A	N/A

Documents/Standards Required/Used:

Title	Version	Author	Publisher	Rel. Date
See Section 3.1	--	--	--	--

Environmental Conditions:

Temperature (ºC)	Power supply
20	Nominal Vdc = 13.6 V

Purpose:

To verify the emissions radiated from the terminal enclosure

Specifications:

Same as section 3.3.4
The search for radiated emission is conducted from 1 GHz to 10 GHz

Equipment Setup:
The terminal is set on an open air test range, 1 m above the ground plane.
The test antenna is set 1 m above the terminal, oriented such a way to obtain a maximum field.
The test cables and the power cables are carefully routed as to not influence the test results.
The terminal TX port is terminated in a 50 ohm load.
The RX antenna is connected.

Procedure:
1. Verify that there are no fields generated by other sources at the test location.
2. Power up the terminal in normal mode
3. Perform the search for emissions using the spectrum analyzer.
4. Power up the terminal in test mode.
5. Select a transmission channel and perform the search for emissions during a test transmission.

Test Status:

Test Conducted by...	Test Witnessed by....	Test Date	Test Status
Cornel Gazdaru	Chris Rampen	July 18, 2001	☒ Pass ☐ Fail

Results:

Only one emission from the enclosure has been detected during transmission, at the transmit frequency.
The Spectrum analyzer reading is 55 dBuV.
The calibrated antenna factor is 28dB at 1.6 GHz
The measured field intensity is thus 83 dB uV/m at 1.6 GHz (corresponding to the selected channel)
No other detectable emissions above the spectrum analyzer noise floor were recorded.
No radiated emissions above the network analyzer noise floor were detected while in receive mode
A spectrum plot for he field intensity is presented in figure 11. Antenna factor is taken into consideration. The vertical axis is scaled directly in dBuV/m

3.3.6 Frequency Stability

Unit Under Test

Description	Mfg.	Model	Serial #
L-Band Radio	BotCorp - Mobilacomm	SSMS Model CT2A	ESN 15400501

Calibrated Equipment Required/Used:

Equip. Description	Mfg.	Model #	Serial. #	Cal. #	Cal. Date
Spectrum Analyzer	Marconi	2393	23931022	47870	06/15/01

Documents/Standards Required/Used:

Title	Version	Author	Publisher	Rel. Date
See Section 3.1	--	--	--	--

Environmental Conditions:

Temperature (ºC)	Supply voltage
-30 to +50 (every 10ºC)	10.5 V to 18 V

Purpose:

To verify the stability of the assigned TX frequency over the transceiver's operating temperature range

Specifications:

The transceiver should transmit within +/- 320 Hz of the assigned TX frequency over the operating temperature range, and power supply range.

Equipment Set-up:

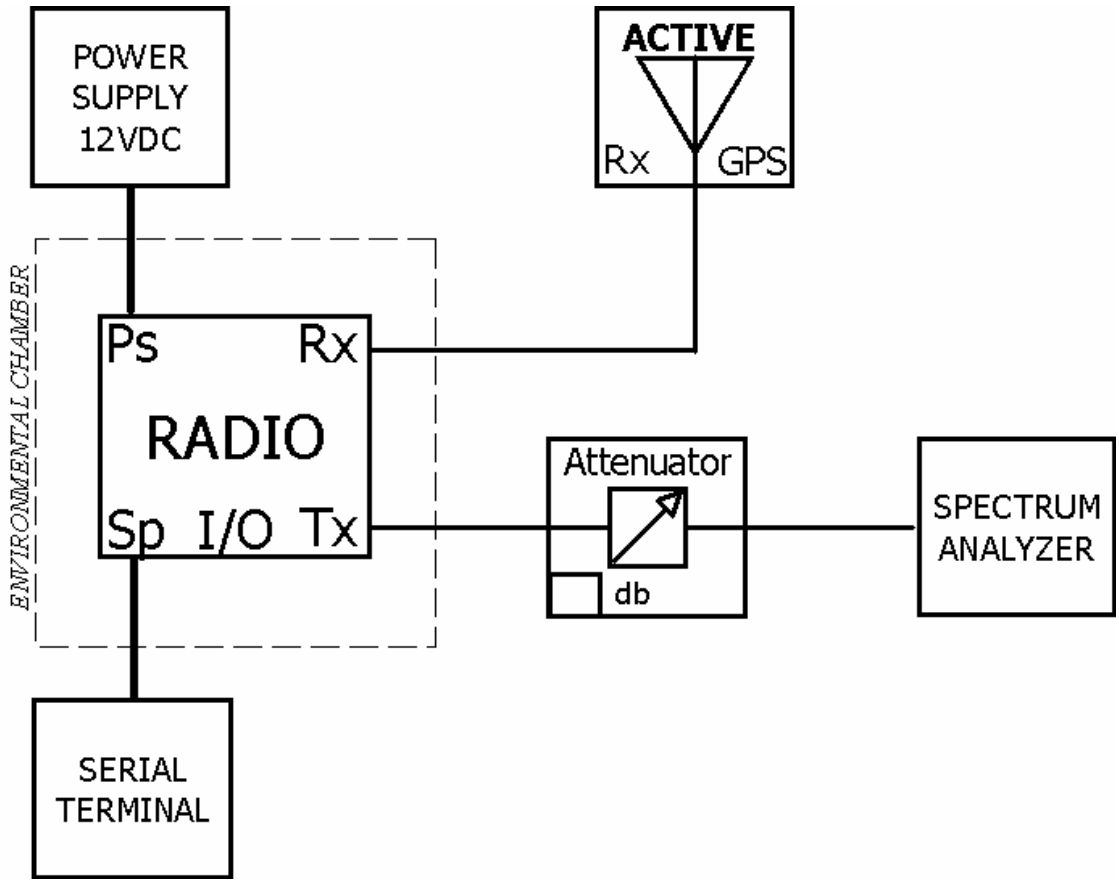

Equipment Settings:

TEST INSTRUMENT		
SPECTRUM ANALYSER		
FUNCTION	**SETTING**	**UNITS**
CENTER FREQUENCY	Frequency corresponding to S1, S3 or S5	MHz
SPAN	100 Hz/div	Hz
BANDWIDTH	100 Hz	Hz
VIDEO BANDWIDTH	NONE	kHz
ATTENUATOR	30 dB + external 30 dB attenuator	dB
SCALE	10 dB /div	dB
REFERENCE LEVEL	5 dBm	
SWEEP TIME	100 msec	s
Observations: The spectrum analyzer frequency reference is locked onto an external 10 MHz frequency standard.		

Procedure:

1. Set the environmental chamber to -30ºC and allow stabilizing for 15 minutes.
2. Put the SSMS terminal in test mode.
3. Allow the SSMS terminal to acquire GPS signal.
4. Command the SSMS terminal to perform frequency calibration
5. Set the SSMS terminal to use channel S1 (1633MHz), S3 (1649MHz) and S5 (1659MHz).
6. Command the SSMS terminal to transmit an un-modulated carrier for 2 seconds.
7. Measure the TX carrier frequency and record the difference between the measured frequency and nominal channel frequency.
8. Increment the temperature in -10ºC steps, up to +50ºC and repeat the measurement. Allow the terminal to stay 10 minutes at the set temperature before doing the measurement

Test Status:

Test Conducted by...	Test Witnessed by....	Test Date	Test Status
Cornel Gazdaru	Chris Rampen	July 13, 2001	☒ Pass ☐ Fail

Results:

Measurement results are presented in the tables below.
The transmitted frequency has been kept within the +/- 320 Hz specified limit in all conditions.
The frequency control closed loop works at all temperatures and operating voltage values.
The GPS receiver acquires signal over the whole temperature range. The GPS signal acquisition time varies from 1.5 minutes to 3.5 minutes. Once the GPS signal is acquired, the frequency is calibrated before each transmission. If GPS signal is not available or the frequency calibration fails, the terminal does not transmit.
No frequency variation has been observed over the DC power supply range.

Temperature (ºC)	TX frequency error (S1)	TX frequency error (S3)	TX frequency error (S5)
-30	+120 Hz	+116 Hz	+120 Hz
-20	+36 Hz	+50 Hz	+72 Hz
-10	+56 Hz	+46 Hz	-34 Hz
0	-76 Hz	-36 Hz	-86 Hz
10	+76 Hz	+46 Hz	+4 Hz
20	-34 Hz	-4 Hz	+110 Hz
30	+46 Hz	+90 Hz	+30 Hz
40	+16 Hz	+28 Hz	-22 Hz
50	-94 Hz	-60 Hz	-130 Hz
55	-75 Hz	-30 Hz	-140 Hz

DC Voltage	TX frequency error (S1)	TX frequency error (S3)	TX frequency error (S5)
10.5 V	+24 Hz	+52 Hz	+36 hz
13.6 V	+14 Hz	+32 Hz	+90 Hz
18 V	+48 Hz	+22 Hz	+110 Hz

3.3.7 Network Control Functions

Unit Under Test

Description	Mfg.	Model	Serial #
L-Band Radio	BotCorp - Mobilacomm	SSMS Model CT2A	ESN 15400501

Calibrated Equipment Required/Used:

Equip. Description	Mfg.	Model #	Serial. #	Cal. #	Cal. Date
Spectrum Analyzer1 (optional)	n/a	n/a	n/a	n/a*	n/a
Spectrum Analyzer2	n/a	n/a	n/a	n/a*	n/a
Signal Generator	n/a	n/a	n/a	n/a	n/a
Power Meter* (In place of Signal Analyzer 2)	n/a	n/a	n/a	n/a	n/a

*
Calibration of this equipment is not required as the test equipment is only required to indicate the presence of a signal confirming network operation

A power meter may be used in lieu of a spectrum analyzer.

Documents/Standards Required/Used:

Title	Version	Author	Publisher	Rel. Date
See Section 3.1	--	--	--	--

Environmental Conditions:

Temperature (ºC)	Power supply
20	Nominal

Purpose:

To verify that the SSMS Terminal accepts NOC signaling commands. To verify the time response of the terminal for the forward link deactivation and to a 'disable' command. To verify that a disabled terminal (following a "disable" command) does not resume transmissions unless specifically enabled by the NOC

Specifications:

The SSMS Terminal shall acknowledge the commands sent by the NOC (TX enable, TX disable). The SSMS Terminal shall not transmit, if the NOC shuts down the forward link. This requirement shall be met within 1 second of the forward link deactivation.
The terminal shall be deactivated by a "disable" command addressed to it, in maximum 10 seconds.

Equipment Set-up:

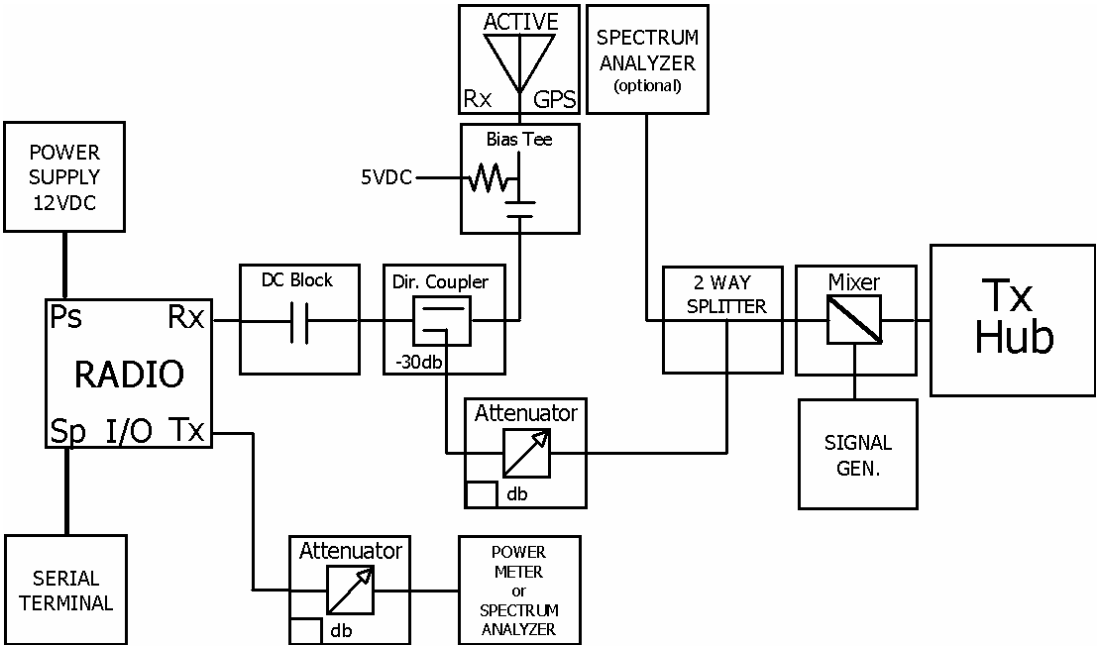

Equipment Settings:

The recording power meter or spectrum analyser are set in very fast sweep mode, and peak hold mode, in order to record a power burst that lasts approximately 80 milliseconds.

Procedure:

1. Configure the TX HUB in satellite mode simulator, using the GPS satellite mode simulator card.
2. Adjust the power levels such a way that the forward link carrier at the SSMS Terminal input is –95 dBm +/- 10 dBm.
3. Start the TX HUB card in normal operation mode.
4. Start the SSMS Terminal in normal operation mode.
5. Confirm that the SSMS Terminal receives the forward link.
6. Confirm that the SSMS Terminal performs a transmission.
7. Remove the forward link and confirm the SSMS Terminal will not transmit. Repeat the test, removing the forward link 1 second before the next transmission and confirm the SSMS Terminal will not transmit.
8. Establish the forward link.
9. Restart the SSMS Terminal in test mode. Verify the terminal receives the forward link.
10. Send a command from the TX HUB card (1,2,3 or 4). Verify the SSMS terminal receives the command.
11. Restart the SSMS Terminal in normal operation mode.
12. Confirm that the SSMS Terminal receives the forward link.
13. Confirm that the SSMS Terminal performs a transmission. Send from the TX HUB a command to disable the SSMS Terminal under test, 10 seconds before a transmission. Repeat the test with shorter time intervals, to measure the response time of the terminal.
14. Verify the SSMS Terminal does not transmit the next transmission. Send from the TX HUB a command to enable the SSMS Terminal under test.
15. Verify the SSMS Terminal does transmit the next scheduled transmission.

Test Status:

Test Conducted by...	Test Witnessed by....	Test Date	Test Status
Cornel Gazdaru	Chris Rampen	August 3, 2001	☒ Pass ☐ Fail

Results:

The software version loaded in the test terminal is: 003.002.002 15:26:00_Aug02 2001
The terminal accepts the commands sent by NOC.
The terminal responds only to commands addressed to its serial number
The terminal does not transmit if the forward link is not received. The terminal aborts the transmission within maximum 1 second of the forward link termination. During the test a response time of 850-900 msec. has been measured.
The terminal aborts a transmission when disabled by NOC, by a disable command, addressed to it. The measured response time of the terminal to the "disable" command is maximum 4 seconds. After being disabled, the terminal does not transmit again unless specifically enabled by the NOC.

4 NOTES

None.

Appendix A

Test Commands

Testing requires that the unit be put into various different test modes. To do this a serial terminal with an RS-232 interface is required. A password is required to access these commands. To obtain a password contact the manufacturer; the password is date sensitive.

Start Test

Power up SSMS unit
Press space bar
Enter Password
Type 'p25' (GPS on)
Type 'p42' (Modem on)
Type 'b1 2' (Tx power on)
Type 'b1 3' (Rx power on)
Type 'S4' (Select channel 4)

Check GPS Lock

Type 'y'
Wait for SSMS Terminal to return

Frequency Calibration

Type 'k0' after acquiring GPS signal
Wait for SSMS Terminal to return

Modem Lock

Type 'xØ'
Type 'lo'
Press ESC

Stop Modem Rx

Type 'x0'
Type 'ha'
Press ESC

Transmit a carrier for 2 seconds

Type 'i 1 -2'

Transmit a modulated signal for 2 seconds

Type ' i 0 -2'

Obtain software load version

Type 'p 23'

Appendix B

Test Equipment Calibration Records

Anritsu

Linking the World

Anritsu Company 490 Jarvis Drive Morgan Hill CA 95037 Telephone: (408) 778-2000 Fax: (408) 778-0239

Certificate Of Calibration

Anritsu Company hereby certifies that the equipment listed below has been measured and where applicable calibrated in accordance with documented procedures using test equipment and standards whose accuracy is traceable to international standards, the National Institute of Standards and Technology (NIST) or other national standards, intrinsic standards; or derived from ratio type self calibration techniques. The standards and calibration program of Anritsu Company complies with the requirements of ANSI/NCSL Z540-1-1994. At the time of calibration, the equipment met or exceeded the specifications published in the applicable product documentation.

The ANRITSU recommended calibration interval is 12 months and the Calibration Due Date* based on that interval is 12-November-2001.

Model:	MA2472A	Submitted by:	ANRITSU ELECTRONICS LTD 102-215 STAFFORD RD. WEST NEPEAN, ON K2H9C1 CANADA
Serial Number:			
Calibration Date:	12-May-2000		
Sales Order #:	R15960		
Repair Order #:	CA21788	Customer PO:	
Temperature, F:	75		
Rel. Humidity % :	34	Calibration Location:	ANRITSU Company 490 Jarvis Drive Morgan Hill, CA. 95037 Ph: 408-778-2000
Test Procedure:	A46670		
Procedure Rev:	A		

PRE-CALIBRATION		POST-CALIBRATION	
Physical Condition:	Good	Within Tolerance:	Yes
Within Tolerance:	No	Limited or No Service Performed (Note Below):	No
Note below if Out of Tolerance and/or describe Physical condition if poor:			
Please refer to Appendix A.			

Certified By: RLIM

Signature: Rlim

Marcel Dubois, Director of Corporate Quality

Test Equipment Used Listed on Page 2

Page 1 of 2

Control Number: 15600

ISO 9002

Anritsu Company's calibration facilities comply with the requirements of ISO Guide 25 and ANSI/NCSL Z540-1-1994.

** A recommended calibration due date has been indicated on the Certificate of Calibration and Calibration Decal. This recommendation is made based on Anritsu's global experience with this product. Your application may require a different calibration interval.*

ACF 2025-2, Rev A. *This certificate shall not be reproduced except in full, without the written authorization of Anritsu Co.*

Test Equipment Used:

Model #	Desc	s/n	Cal Due Date
3652-1	CALIBRATION KIT	70072	1-Dec-2000
432A	POWER METER	3303400518	21-Mar-2002
34420A	OHM METER	US34000297	7-Feb-2001
ML2438A	METER, POWER	98360036	19-May-2000
33120A	FUNCTION GENERATOR	US36008978	20-Jul-2000
34401A	DMM	US36087499	23-Feb-2001
68169B	SYNTHESIZER	475010	25-Aug-2000
8478B	THERMISTOR MOUNT	3318A25201	27-Aug-2001
K486A	THERMISTOR MOUNT	06161	15-Jan-2001
R486A	THERMISTOR MOUNT	08250	12-Jan-2001

HAZEL BOND
RAG CONTENT

Page 2 of 2
Control Number: 15600

ISO 9002

* A recommended calibration due date has been indicated on the Certificate of Calibration and Calibration Decal. This recommendation is made based on Anritsu's global experience with this product. Your application may require a different calibration interval.

ACF 2025-2, Rev A. *This certificate shall not be reproduced except in full, without the written authorization of Anritsu Co.*

CERTIFICATE of CALIBRATION

Instrument : MAR - 2393 Serial # : 23931022 Asset # : NAN

Submitted by : Bot Engineering Ltd., Campbellville, ON

Purchase Order : Reference # : **47870**

Cal. status : Received in spec's, no adjustment made.

JOLA Instruments Inc. certifies that the above listed instrument was calibrated on date noted and was released from this laboratory performing in accordance with the specifications set forth by the manufacturer.

The calibration process meets the requirements of ISO-9002 / Guide-25 standard, working standards used for calibration are certified by or traceable to the ***National Research Council of Canada*** or the ***National Institute of Standards and Technology.***

Calibrated : Jun 15, 2001 By :

Cal. Due : Jun 15, 2002 J. Raposo

Temperature : 23 +/- 2 C Relative Humidity : 50 +/-20%

Standards used : J-222 J-228 J-238 J-247 J-251 J-260 J-264

JOLA Instruments Inc.

REPAIR AND CALIBRATION TRACEABLE TO NRCC AND NIST

88 Judge Rd. Toronto, ON, M8Z 5B4
Phone : (416) 234 0354 Fax : (416) 234 9562
http: // www.jola.com
e-Mail : jola @ jola.com

CERTIFICATE of CALIBRATION

Instrument : TEK - TDS360 Serial # : B013260 Asset # : NAN

Submitted by : Bot Engineering Ltd., Campbellville, ON

Purchase Order : JR10 Reference # : **42639**

Cal. status : Received in spec's, no adjustment made.

JOLA Instruments Inc. certifies that the above listed instrument was calibrated on date noted and was released from this laboratory performing in accordance with the specifications set forth by the manufacturer.

The calibration process meets the requirements of ISO-9002 / Guide-25 standard, working standards used for calibration are certified by or traceable to the ***National Research Council of Canada*** or the ***National Institute of Standards and Technology.***

Calibrated : Aug 18, 2000 By : C. Dyal

Cal. Due : Aug 18, 2001 C. Dyal

Temperature : 23 +/- 2 C Relative Humidity : 50 +/-20%

Standards used : J-201

JOLA Instruments Inc.

REPAIR AND CALIBRATION TRACEABLE TO NRCC AND NIST

88 Judge Rd. Toronto, ON, M8Z 5B4
Phone : (416) 234 0354 Fax : (416) 234 9562
http: // www.jola.com
e-Mail : jola @ jola.com