REV	DESCRIPTION OF CHANGE	DWN	CHK	APVD	APVD	ECN

NOTES

1. INTERPRET DRAWING IN ACCORDANCE WITH PUBLIC SAFETY EQUIPMENT, INC. DRAFTING STANDARDS, OCTOBER 1, 1991 AND ANSI Y14.5-1982.

QUALITY ACCEPTANCE CRITERIA

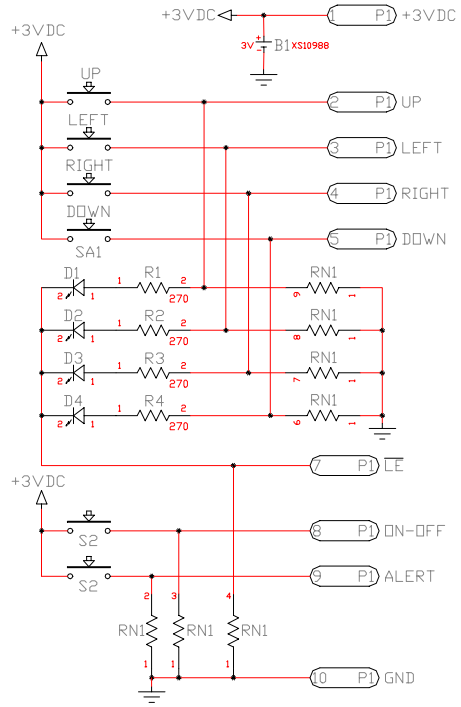

REFERENCE DRAWINGS

DWG NO	PART NO.	DESCRIPTION
XE-	10959	FABRICATION DRAWING
S-	71611	ASSEMBLY AND B.O.M.
S-	-	INSERTED AND WAVE SOLDERED

LAST REFERENCE DESIGNATIONS USED											
C	D	R	Q	U	K	V	PZ	SW	F	JP	J
C10	D3	R8	Q2	U7	N/A	V1	N/A	N/A	F1	N/A	J2A

NOT USED: N/A

UNLESS OTHERWISE SPECIFIED
ALL RESISTORS ARE IN OHMS
ALL CAPACITORS ARE IN FARADS

DIMENSIONS IN [ ] = MILLIMETERS

CODE 3® PUBLIC SAFETY EQUIPMENT, INC

THIS DRAWING IS CONFIDENTIAL PROPERTY OF PUBLIC SAFETY EQUIPMENT,INC,AND IS TO BE USED ONLY BY AUTHORIZED PERSONNEL AND IN THE INTEREST OF PUBLIC SAFETY EQUIPMENT,INC. IT MUST BE ACCOUNTED FOR,SHALL NOT BE REPRODUCED IN WHOLE OR IN PART,WITHOUT PRIOR WRITTEN PERMISSION FROM PUBLIC SAFETY EQUIPMENT,INC,AND MUST BE RETURNED TO PUBLIC SAFETY EQUIPMENT,INC,AT ANY TIME UPON REQUEST,BUT IN ANY EVENT AT THE COMPLETION OF THE WORK OR JOB.THE RECIPIENT AGREES TO KEEP CONFIDENTIAL AND REQUIRE HIS/ITS EMPLOYEES TO KEEP CONFIDENTIAL,THE INFORMATION CONTAINED HEREON,DISCLOSURE OF THE INFORMATION CONTAINED HEREON TO BE ONLY TO THE PERSONS WHO REQUIRE SUCH INFORMATION FOR THEIR WORK ON PUBLIC SAFETY EQUIPMENT,INC.PROJECTS.

DO NOT SCALE DRAWING.

TOLERANCES (UNLESS OTHERWISE NOTED)

FRACTIONS	ANGLES
±1/64	±1°
2 PLACE [±.25]	2 PLACE ±.01
3 PLACE [±.13]	3 PLACE ±.005

NO	PART NO	PART NAME	REQD	MATL

TITLE: SCHEMATIC DIAGRAM RF, SWITCH BOARD

PRELIMINARY

MATERIAL:

DWN: BMH

DATE: 7/6/00

CHK:

SHEET NO. 1 OF 1

SIZE C

FINISH:

ENGR: RLM

DIMENSIONS ARE IN INCHES UNLESS OTHERWISE SHOWN

APVD:

DRAWING NO. XW10959

CREATED PER ECN:

SCALE: 1/1

APVD:

REV	DESCRIPTION OF CHANGE	DWN	CHK	APVD	APVD	ECN

NOTES

1. INTERPRET DRAWING IN ACCORDANCE WITH PUBLIC SAFETY EQUIPMENT, INC. DRAFTING STANDARDS, OCTOBER 1, 1991 AND ANSI Y14.5-1982.

QUALITY ACCEPTANCE CRITERIA

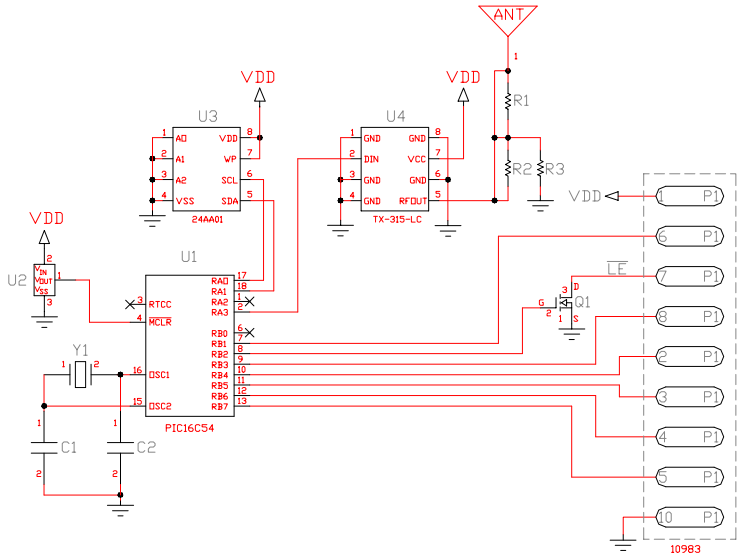

REFERENCE DRAWINGS

DWG NO	PART NO.	DESCRIPTION
XE-	10960	FABRICATION DRAWING
S-	71610	ASSEMBLY AND B.O.M.
S-	-	INSERTED AND WAVE SOLDERED

LAST REFERENCE DESIGNATIONS USED											
C	D	R	Q	U	K	V	PZ	SW	F	JP	J
C10	D3	R8	Q2	U7	N/A	V1	N/A	N/A	F1	N/A	J2A

NOT USED: N/A

UNLESS OTHERWISE SPECIFIED
ALL RESISTORS ARE IN OHMS
ALL CAPACITORS ARE IN FARADS

DIMENSIONS IN [ ] = MILLIMETERS

CODE 3® PUBLIC SAFETY EQUIPMENT,INC

THIS DRAWING IS CONFIDENTIAL PROPERTY OF PUBLIC SAFETY EQUIPMENT,INC. AND IS SUBJECT TO THE RIGHTS OF PUBLIC SAFETY EQUIPMENT,INC. IT MUST BE ACCOUNTED FOR.SHALL NOT BE REPRODUCED IN WHOLE OR IN PART,WITHOUT PRIOR WRITTEN PERMISSION FROM PUBLIC SAFETY EQUIPMENT,INC.AND MUST BE RETURNED TO PUBLIC SAFETY EQUIPMENT,INC.AT ANY TIME UPON REQUEST,BUT IN ANY EVENT AT THE COMPLETION OF THE WORK OF JOB.THE RECIPIENT AGREES TO KEEP CONFIDENTIAL AND REQUIRE HIS/ITS EMPLOYEES TO KEEP CONFIDENTIAL THE INFORMATION CONTAINED HEREIN.NO PART OF THE WORK PRODUCT PRODUCED HEREUNDER SHALL BE MADE TO THOSE PERSONS WHO REQUIRE SUCH INFORMATION FOR THEIR WORK ON PUBLIC SAFETY EQUIPMENT,INC.PRODUCTS.

DO NOT SCALE DRAWING.

TOLERANCES (UNLESS OTHERWISE NOTED)

FRACTIONS	ANGLES
±1/64	±1°
2 PLACE [±.25]	2 PLACE ±.01
3 PLACE [±.13]	3 PLACE ±.005

NO	PART NO	PART NAME	REQD	MATL

TITLE: SCHEMATIC DIAGRAM RF, REMOTE TRANSMITTER

PRELIMINARY

MATERIAL:

DWN: BMH DATE: 7/6/00

CHK:

SHEET NO. 1 OF 1

SIZE C FINISH:

ENGR: RLM

DIMENSIONS ARE IN INCHES UNLESS OTHERWISE SHOWN

APVD:

DRAWING NO. XW10960

CREATED PER ECN: SCALE: 1/1 APVD: