TABLE OF CONTENTS LIST FOR PART 90 VHF DEVICE

APPLICANT: TECNET GLOBAL CORPORATION

FCC ID: PT9SDU-7000

TEST REPORT:

PAGE 1.....COVER SHEET - GENERAL INFORMATION & TECHNICAL DESCR.
PAGE 2.....MPE CALCULATION AND TECHNICAL DESCRIPTION
PAGE 3.....RF POWER OUTPUT, MOD CHARACTERISTICS
PAGE 4.....AUDIO FREQUENCY RESPONSE PLOT
PAGE 5.....MODULATION LIMITING – 300 Hz
PAGE 6.....MODULATION LIMITING – 12.5kHz – 1000 Hz
PAGE 7.....MODULATION LIMITING – 12.5kHz – 3000 Hz
PAGE 8.....OCCUPIED BANDWIDTH
PAGE 9.....OCCUPIED BANDWIDTH CONTINUED
PAGE 10.....OCCUPIED BANDWIDTH PLOT – CW – 12.5 kHz – CHANNEL B
PAGE 11.....OCCUPIED BANDWIDTH PLOT – CW – 25 kHz – CHANNEL A
PAGE 12.....OCCUPIED BANDWIDTH PLOT – 9600 BAUD/825Hz – CH B
PAGE 13.....OCCUPIED BANDWIDTH PLOT – 9600 BAUD/825Hz – 25kHz – CH A
PAGE 14.....SPURIOUS EMISSIONS AT ANTENNA TERMINALS
PAGE 15.....FIELD STRENGTH OF SPURIOUS EMISSIONS
PAGE 16.....METHOD OF MEASURING RADIATED SPURIOUS EMISSIONS
PAGE 17.....FREQUENCY STABILITY
PAGE 18-19..TRANSIENT FREQUENCY STABILITY
PAGE 20.....TRANSIENT FREQUENCY RESPONSE – 12.5kHz DEVIATION-1
PAGE 21.....TRANSIENT FREQUENCY RESPONSE – 12.5kHz DEVIATION-2
PAGE 22.....TRANSIENT FREQUENCY RESPONSE – 25kHz DEVIATION-1
PAGE 23.....TRANSIENT FREQUENCY RESPONSE – 25kHz DEVIATION-2
PAGE 24.....LIST OF TEST EQUIPMENT

EXHIBITS CONTAINING:

EXHIBIT 1A.....FCC ID LABEL SAMPLE
EXHIBIT 1B.....SKETCH OF FCC ID LABEL LOCATION
EXHIBIT 2A.....EXTERNAL PHOTO – FRONT VIEW
EXHIBIT 2B.....EXTERNAL PHOTO – REAR VIEW
EXHIBIT 2C.....EXTERNAL PHOTO – SIDE VIEW
EXHIBIT 2D.....EXTERNAL PHOTO – TOP VIEW
EXHIBIT 2E.....INTERNAL PHOTO – COMPONENT VIEW
EXHIBIT 2F.....INTERNAL PHOTO – COPPER VIEW
EXHIBIT 3.....USER’S MANUAL
EXHIBIT 4.....THEORY OF OPERATION
EXHIBIT 5.....TUNING PROCEDURES AND PROGRAMMING
EXHIBIT 6.....BLOCK DIAGRAM
EXHIBIT 7.....SCHEMATIC
EXHIBIT 8.....TEST SET UP PHOTO

GENERAL_INFORMATION_REQUIRED FOR_TYPE_ACCEPTANCE

2.1033 (c)(1)(2) TECNET GLOBAL CORPORATION will sell the FCC ID: PT9SDU-7000 UHF transceiver in quantity, for use under FCC RULES PART 22 & 90.

2.1033 (c) TECHNICAL DESCRIPTION

2.1033 (3) User Manual See Exhibit 3
MODELS SDU-7000 AND TNET-44 SHARE THE SAME USERS MANUAL

2.1033 (4) Type of Emission: 20K0F2D For 25 kHz
10K0F2D For 12.5 kHz

For 25 kHz
Bn = 2M + 2DK
M = 19,200Bits per second
D = 0.4 kHz (Peak Deviation)
K = 1
Bn = 2(19,200/2) + 2(0.4k)(1) = 19.2k + 0.8k = 20.0K
ALLOWED AUTHORIZED BANDWIDTH = 20.00 kHz.

For 12.5 kHz
Bn = 2M +2DK
M = 9600Bits per second
D = 0.825 kHz (Peak Deviation)
K = 1
Bn = 2(9.6/2) K + 2(0.825k)(1) = 9.6k = 1.65k = 11.25 k
ALLOWED AUTHORIZED BANDWIDTH = 11.25 kHz.

90.209(b)(5)

2.1033 (5) Frequency Range: 450-470 MHz

(6) Power Range and Controls:There are NO user Power controls.

(7) Maximum Output Power Rating: 4.5 Watts , into a 50 ohm resistive load.

(8) DC Voltages and Current into Final Amplifier:

POWER INPUT
FINAL AMPLIFIER ONLY
Vce = 13.6 Volts
IC = 1.2A

Pin = 16.3 Watts

Efficiency = 27.6%

2.1093 RF exposure is intended to be handled during licensing by the responsible FCC bureau(s).The transmitter is intended to operate with a 10% duty cycle.

An example MPE calculation is based on continuous exposure. A Yagi antenna with a gain 6 dBd and a distance of 2 m was used.

$GdB := 6$ gain of ant in dB

$$G := 10^{\frac{GdB}{10}}$$

$G = 3.981$ gain of antenna

$P := 4500$ $R1 := 200$ P is power in mW R1 is distance in cm

$$S1 := \frac{P \cdot G}{4 \pi \cdot R1^2}$$

$$M := P \cdot G$$

$$M = 1.791 \cdot 10^4$$

$S1 = 0.036$ Power density in mW/cm^2

Calculated maximum exposure based on OET 65. f/300 for occupational limits. f/1500 for general public. f was taken as 470 MHz giving 1.57 mW/cm^2 for occupational and 0.31 mW/cm^2 for general population.

2.1033 (9) Tune-up procedure. MODELS SDU-7000 and TNET-44 Share the same tuning procedure. The tune-up procedure is given in EXHIBIT 5.

2.1033(10) Complete Circuit Diagrams: The circuit diagram is included as EXHIBIT 7. The block diagram is included as EXHIBIT 6.

(11) A photograph or drawing of the equipment Identification label is shown in Exhibit 1.

2.1033(c)(12) Photographs of the equipment of sufficient clarity to reveal equipment construction and layout and label location are shown in Exhibits 1-2F.

2.1033(c)(13) For equipment employing digital modulation, a detail description of the modulation technique. This UUT uses FSK to modulate the transmitter.

2.1033(c)(14) data required for 2.1046 to 2.1057 SEE Below

2.1046(a) RF_power_output. Is measured by connecting a 50 ohm, resistive wattmeter to the RF output connector. With a nominal battery voltage of 13.6VDC, and the transmitter properly adjusted.

OUTPUT POWER = 4.5 Watts

METHOD OF MEASURING RF POWER OUTPUT

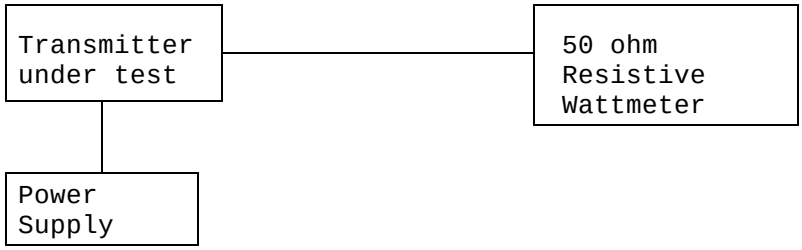

2.1047(a) MODULATION CHARACTERISTICS
NOT APPLICABLE, F2 type of emission.

2.1049 AUDIO LOW PASS FILTER
This UUT does not have a low pass filter.

2.1049 AUDIO INPUT VS MODULATION The audio frequency input vs deviation was measured in accordance with TIA/EIA Specification 603 S2.2.6.2.1 with the following Exceptions ; starting with 1000 Hz., the input was increased well beyond the deviation changing. This measurement was repeated for the band limits and any frequency deemed appropriate.
See Pages 4-7.

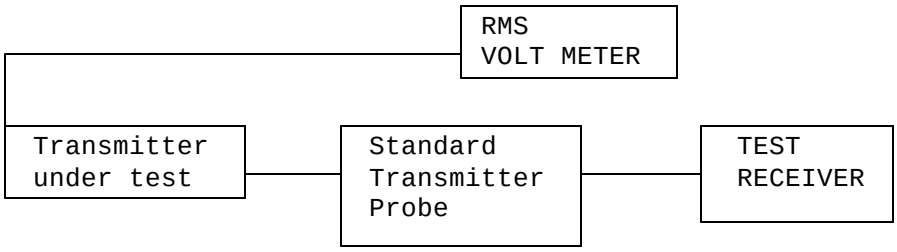

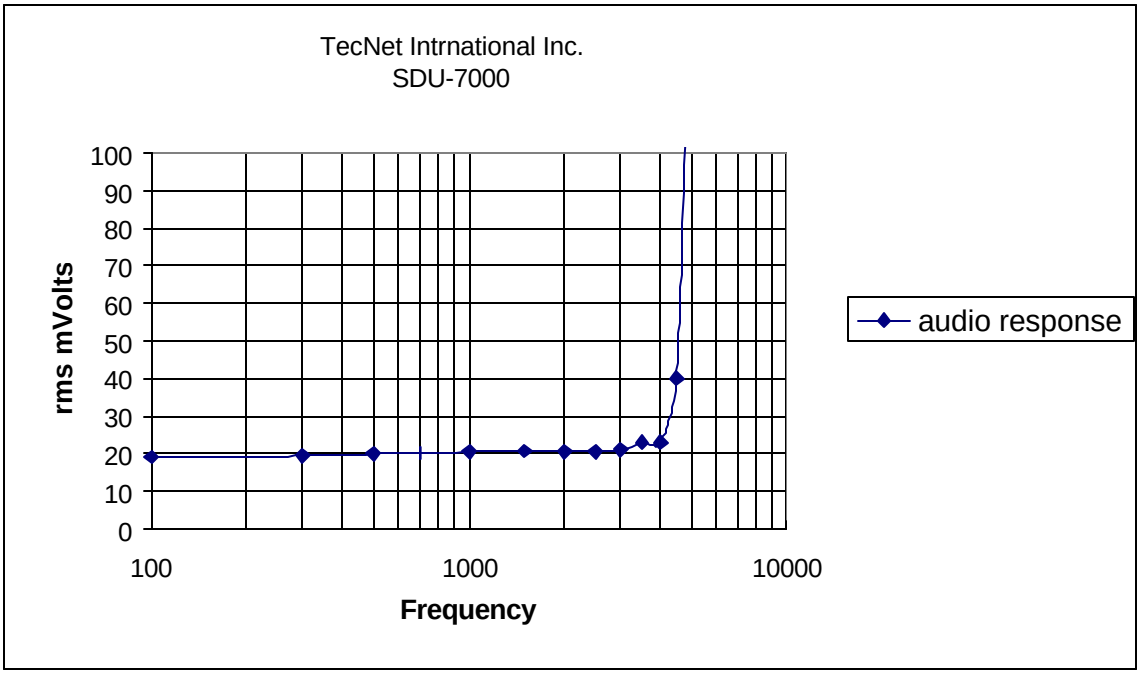
TecNet Intrnational Inc.
SDU-7000
rms mVolts
100
90
80
70
60
50
40
30
20
10
0
100
1000
10000
Frequency
audio response

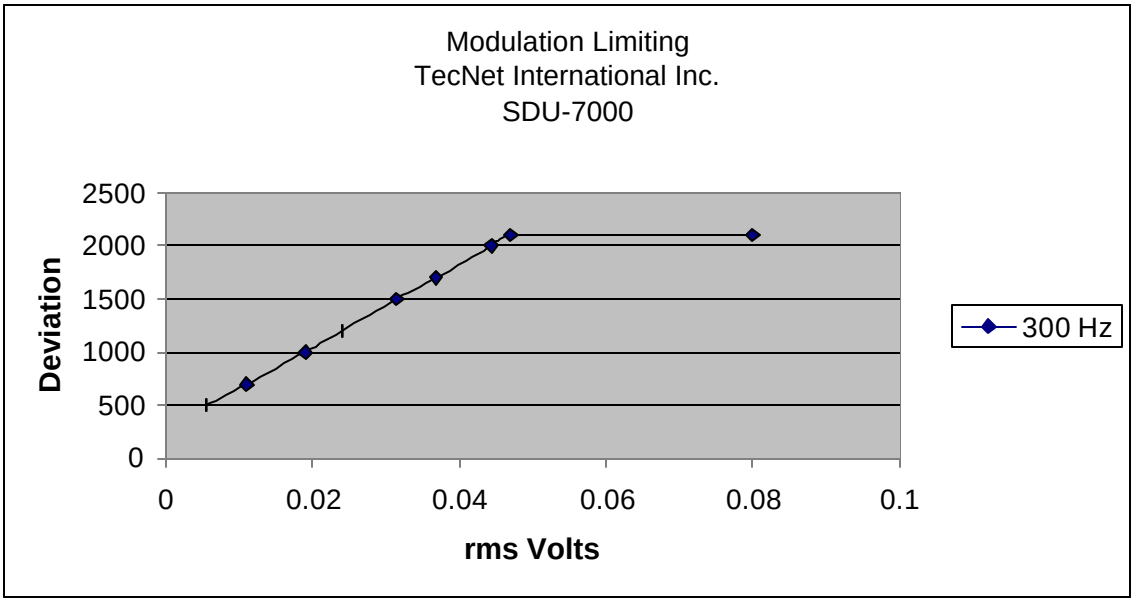
Modulation Limiting
TecNet International Inc.
SDU-7000
Deviation
2500
2000
1500
1000
500
0
0
0.02
0.04
0.06
0.08
0.1
rms Volts
300 Hz

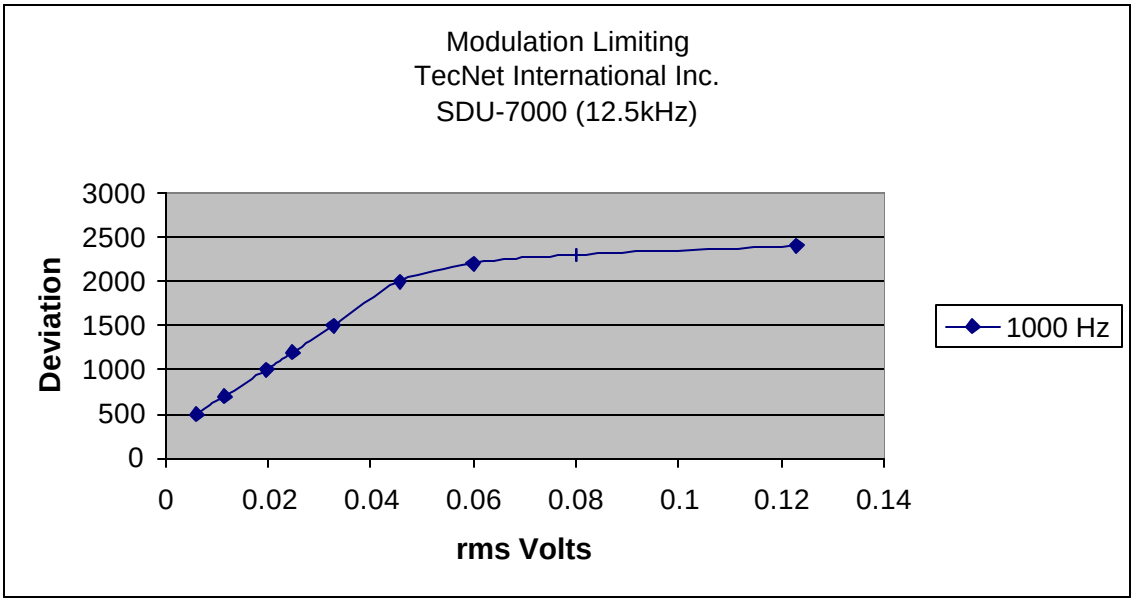
Modulation Limiting
TecNet International Inc.
SDU-7000 (12.5kHz)
Deviation
3000
2500
2000
1500
1000
500
0
0
0.02
0.04
0.06
0.08
0.1
0.12
0.14
rms Volts
1000 Hz

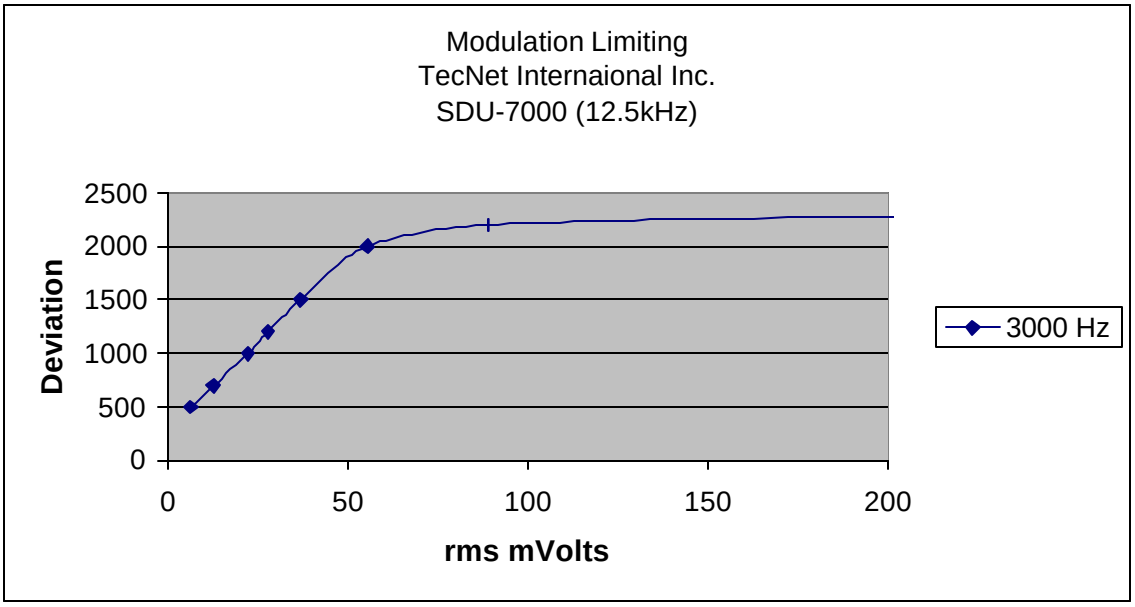
Modulation Limiting
TecNet Internaional Inc.
SDU-7000 (12.5kHz)
Deviation
2500
2000
1500
1000
500
0
0
50
100
150
200
rms mVolts
3000 Hz

Occupied Bandwidth :

90.210 (c) For transmitters that are not equipped with an audio low pass filter pursant to S90.211(b), the power of any emission must be attenuated below the unmodulated carrier ouptut power as follows; (1) On any frequency removed from the center of the authorized bandwidth by a displacement frequency(fd in kHz) of more than 5 kHz but not more than 10 kHz: At least 83 log(fd/5)dB; (2)ON any frequency removed from the center of the authorized bandwidth by a displacement frequency(fd in kHz) of more than 10kHz, but not more than 250% of the authorized bandwidth: At least 29 log(fd2/11)dB or 50 dB, whichever is the lesser attenuation; (3) on any frequency removed from the center of the authorized bandwidth by more than 250% of the authorized bandwidth: At least 43+10 log(Po)dB.

90.210(d) Emission Mask D - 12.5 kHz channel bandwidth equipment. For transmitters designed to operate with a 12.5 kHz channel bandwidth, any emission must be attenuated below the power (P) of the highest emission contained within the authorized bandwidth as follows:

(1) On any frequency from the center of the authorized bandwidth f0 to 5.625 kHz removed from f0: Zero dB.

(2) On any frequency from the center of the authorized bandwdith by a displacement frequency (fd in kHz) of more than 5.625 kHz but no more than 12.5 kHz: At least 7.27 (fd - 2.88 kHz) dB.

(3) On any frequency removed from the center of the authroized bandwidth by a displacement frequency (fd in kHz) of more than 12.5 kHz: At least 50 + 10 log (P) dB or 70 dB, whichever is the lesser attenuation. Data in the plots shows that on any frequency removed from the assigned frequency by more than 50%, but not more than 100%: At least 25dB. On any frequency removed from the assigned frequency by more than 100%, but not more than 250%: At least 35dB. On any frequency removed from the assigned frequency by more than 250%, of the authorized bandwidth: At least 43+log(P)dB.

Radiotelephone transmitter with modulation limiter.

Test procedure: TIA/EIA-603 para 2.2.11 , with the exception that various tones were used.

Test procedure diagram

OCCUPIED BANDWIDTH MEASUREMENT

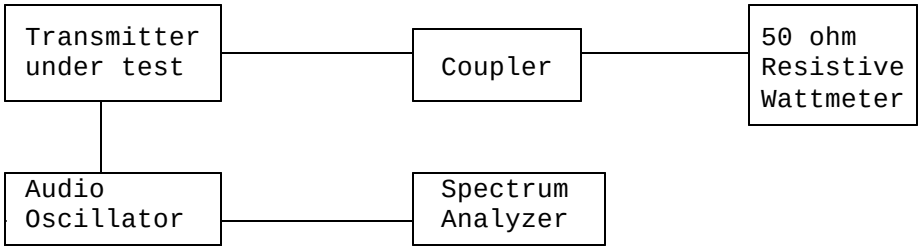

FCC ID: PT9SDU-7000

CW - 12.5 kHz - CHANNEL B

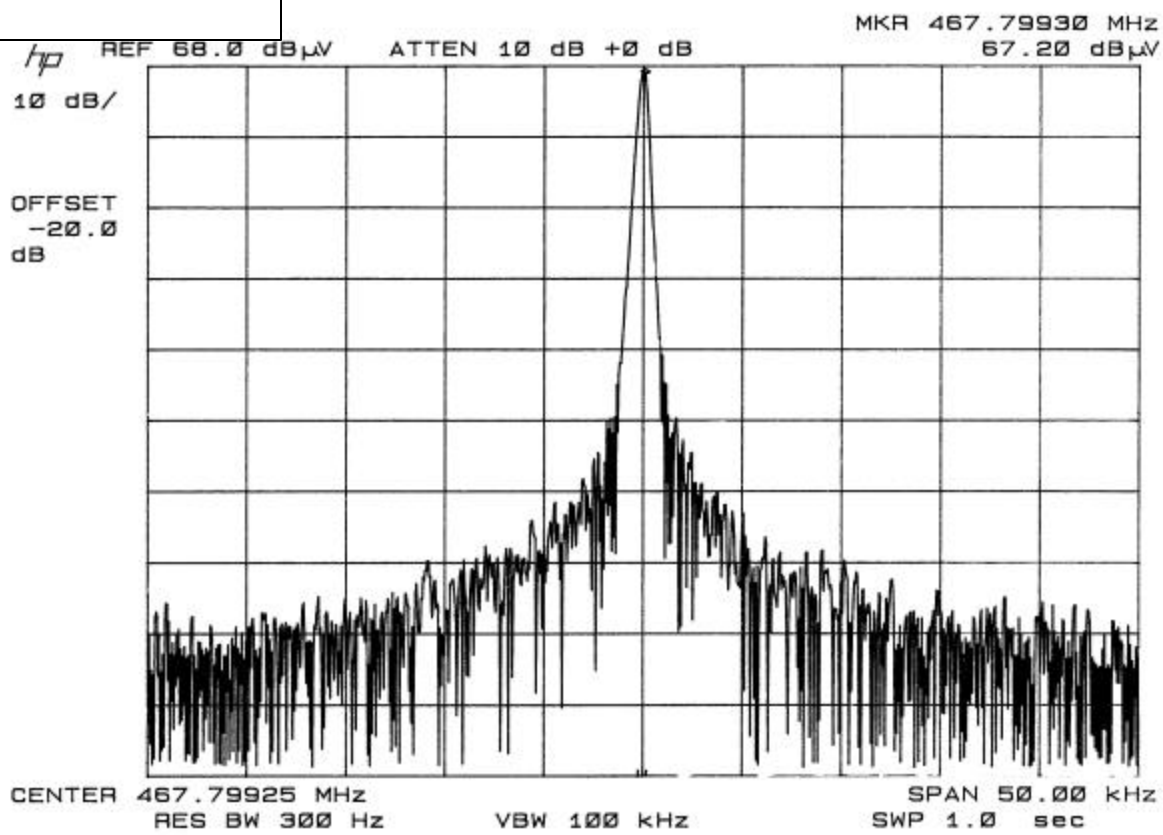

FCC ID: PT9SDU-7000

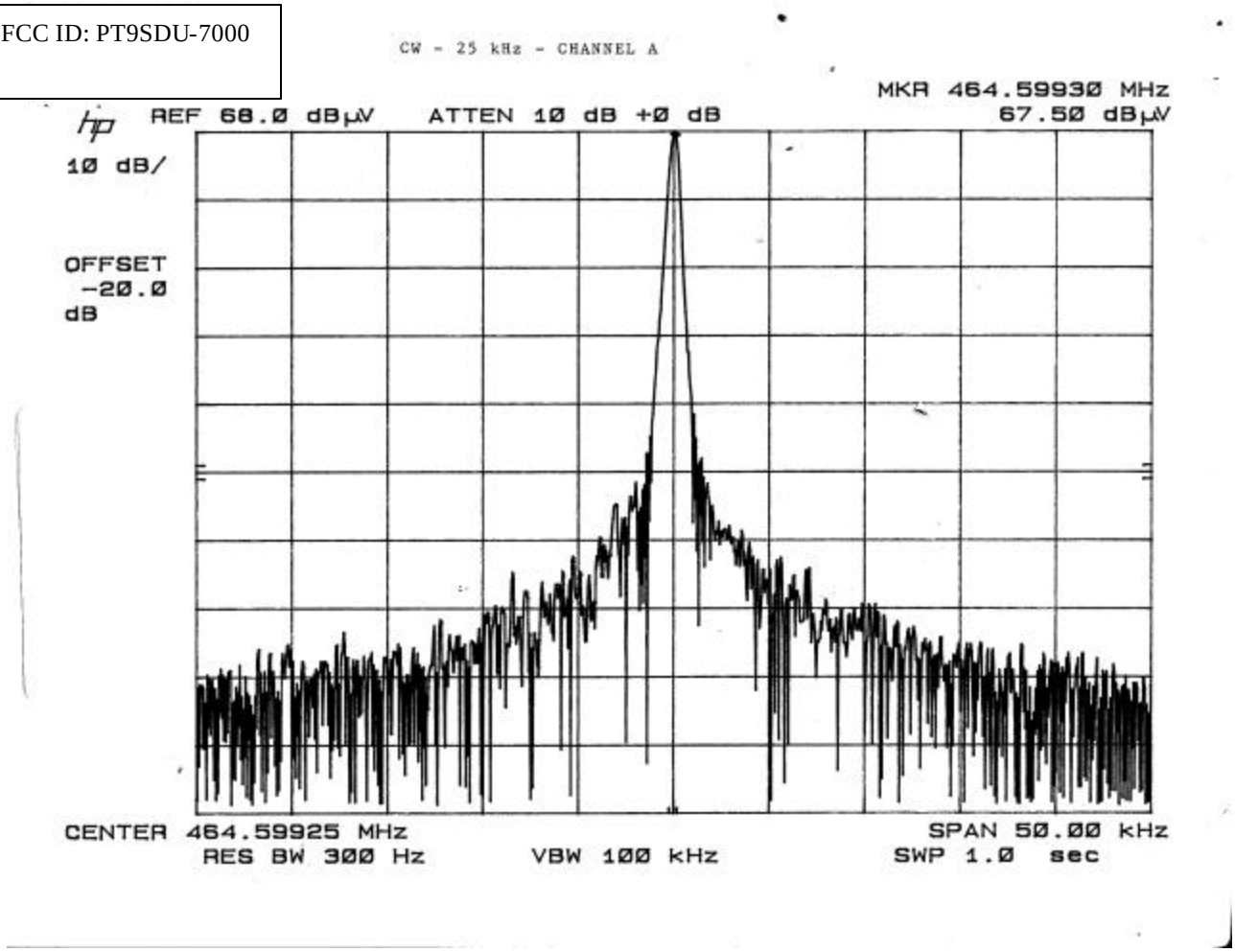

FCC ID: PT9SDU-7000

MODEL: SDU-7000

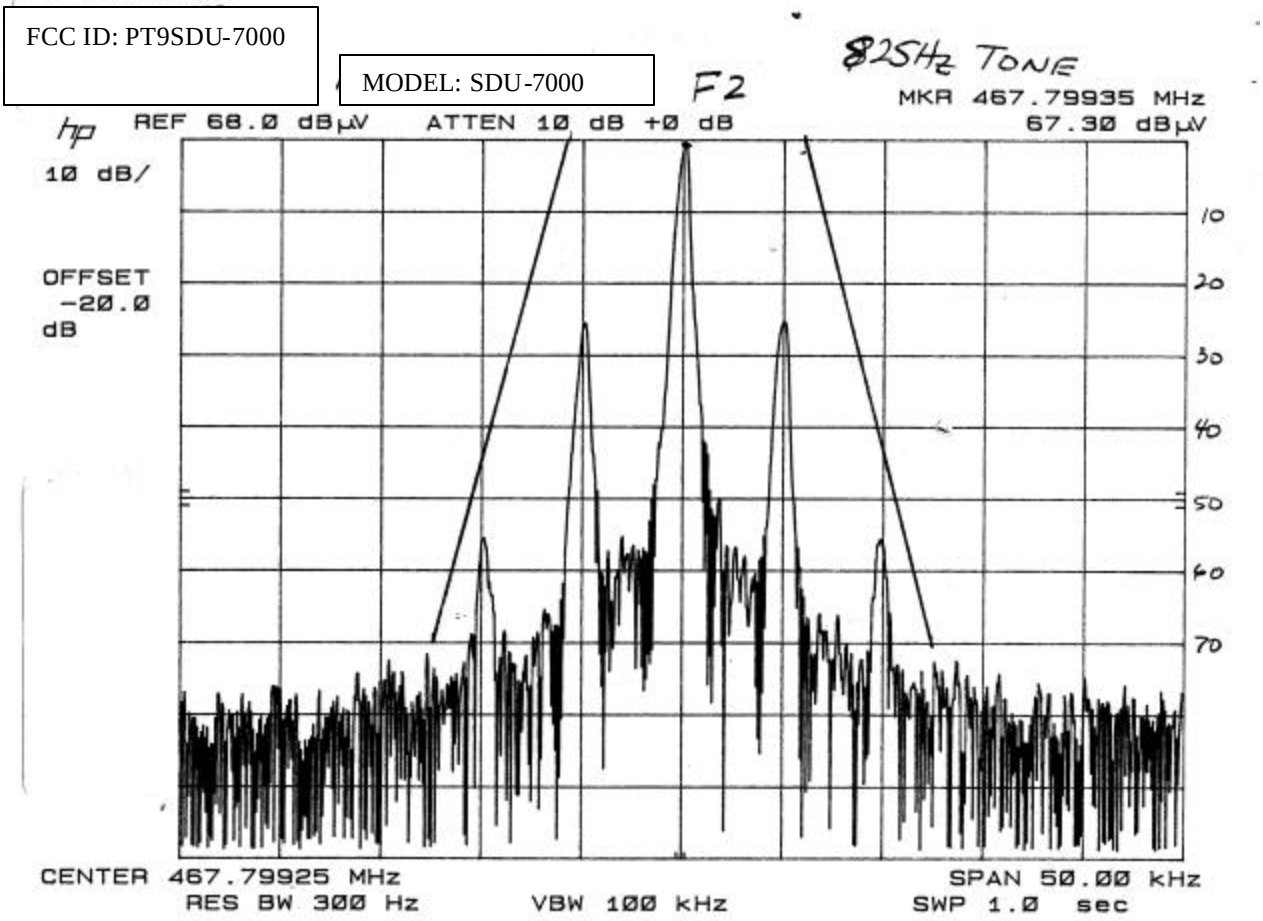

FCC ID: PT9SDU-7000

9600 BAUD/825 Hz - 25 kHz - CHANNEL A

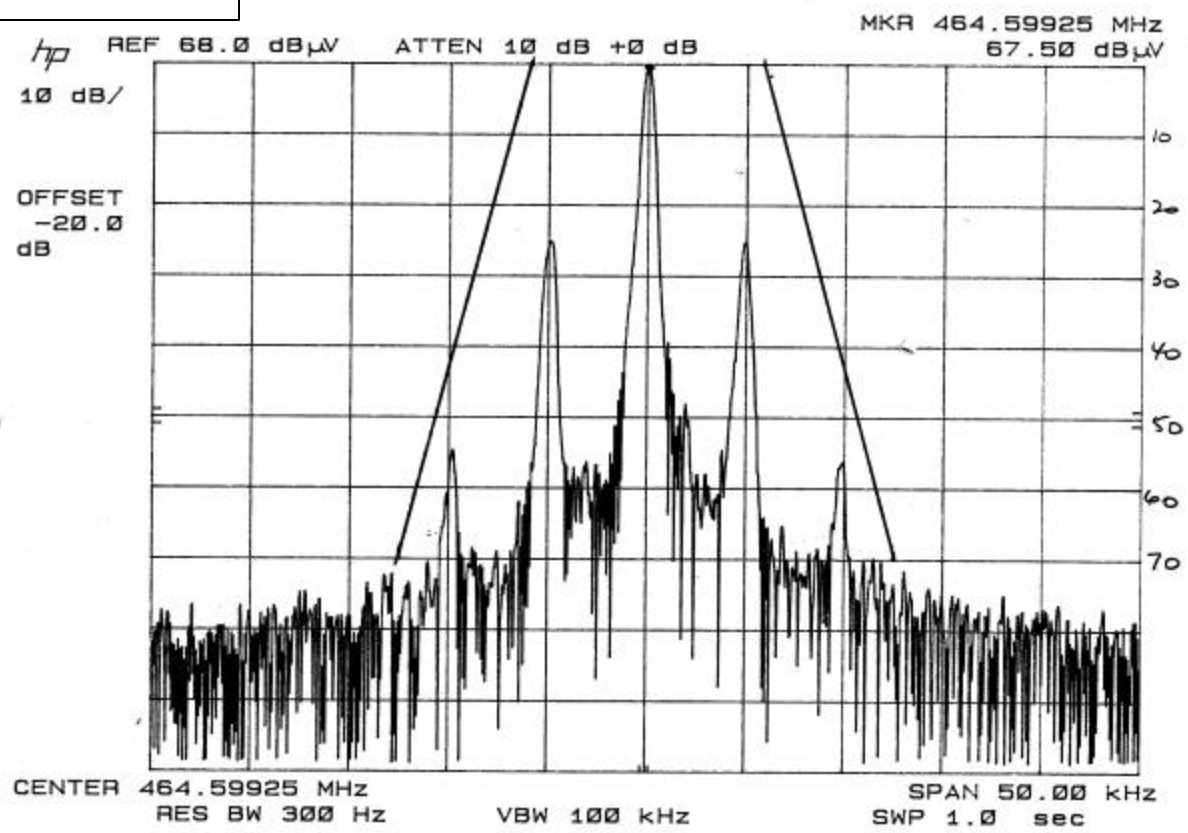

2.1051 Spurious emissions at antenna terminals(conducted):

Data on the following page shows the level of conducted spurious responses. The carrier was modulated 100% using a 2500Hz tone. The spectrum was scanned from 0.4 to at least the 10th harmonic of the fundamental. The measurements were made in accordance with standard TIA/EIA-603.

Method of Measuring Conducted Spurious Emission

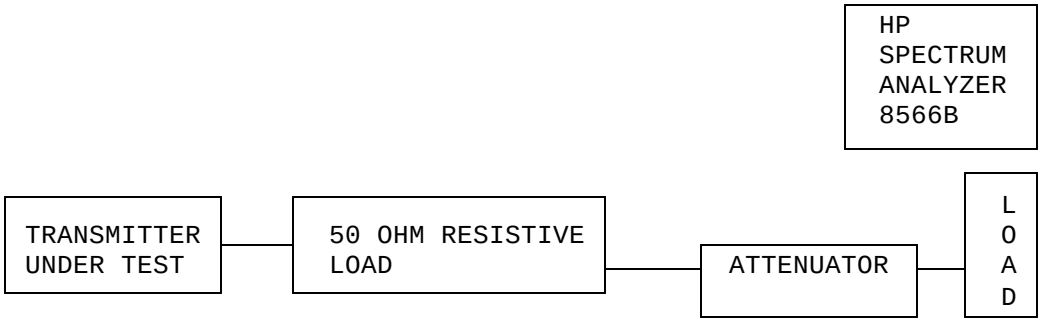

REQUIREMENTS : Emissions must be 43 +10log(Po) dB below the mean power output of the transmitter.

For 25kHz 43 + 10log(4.5) = 49.53 dB

For 12.5kHz 50+ 10log (Po) = 56.63 dB

Emission Frequency MHz	dB BELOW CARRIER
460.1	00.0
920.2	75.7
1380.3	95.7
1840.4	104.1
2300.6	104.4
2760.7	112.8
3220.8	110.3
3681.0	90.6
4141.41	86.5
4601.2	98.9

METHOD OF MEASUREMENT: The procedure used was TIA/EIA-603 STANDARD without any exceptions. An audio generator was connected to the UUT through a dummy microphone circuit and the output of the transmitter connected to a standard load and from the standard load through a pre-selector filter of the spectrum analyzer. The spectrum was scanned from 400 kHz to at least the tenth harmonic of the fundamental using a HP model 8566B spectrum analyzer. The measurements were made using the shielded room located at TIMCO ENGINEERING INC. 849 N.W. State Road 45 Newberry, Florida 32669.

2.1053 Field strength of spurious emissions:

NAME OF TEST: RADIATED SPURIOUS EMISSIONS

REQUIREMENTS: Emissions must be 50 +10log(Po) dB below the mean power output of the transmitter.

50 + 10log(4.5) = 56.50dB

TEST DATA:

Emission Frequency MHz	Ant. Polarity	Attn. dBc	Margin dB
460.10	H	0.00	0.00
920.20	H	55.93	0.25
1,380.30	v	69.76	14.08
1,840.50	v	81.63	25.95
2,300.60	v	75.55	19.87
2,760.70	h	96.87	41.19
3,220.80	v	84.20	28.52
3,681.00	v	93.50	37.82
4,141.10	v	79.38	23.70
4,601.20	h	91.65	35.97

METHOD OF MEASUREMENT: The tabulated Data shows the results of the radiated field strength emissions and attenuation calculated per TIA/EIA 603. The spectrum was scanned from 30 to at least the tenth harmonic of the fundamental. This test was conducted per TIA/EIA 603. Measurements were made at the open field test site of TIMCO ENGINEERING INC. located at 849 N.W. STATE ROAD 45, NEWBERRY, FL 32669.

Method of Measuring Radiated Spurious Emissions

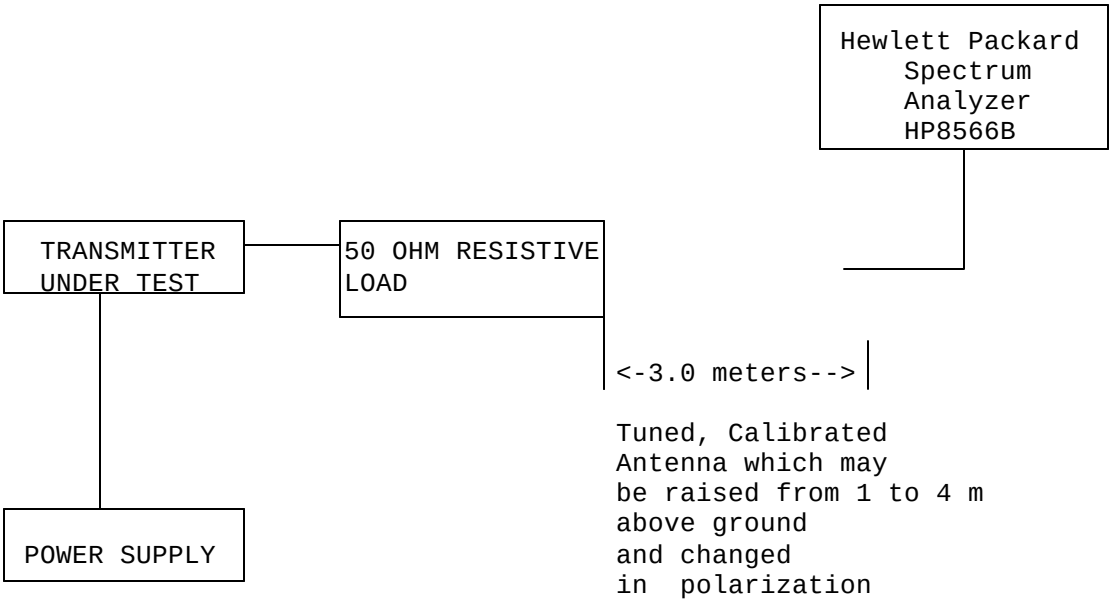

Equipment placed 80 cm above ground
on a rotatable platform.

2.1055 Frequency stability:
90.213(a)(1)

Temperature and voltage tests were performed to verify that the frequency remains within the .00015%, 1.5 ppm specification limit, for 25 kHz spacing & 0.00025% for 12.5 kHz spacing and 0.0001% for 6.25 kHz spacing. The test was conducted as follows: The transmitter was placed in the temperature chamber at 25 degrees C and allowed to stabilize for one hour. The transmitter was keyed ON for one minute during which four frequency readings were recorded at 15 second intervals. The worse case number was taken for temperature plotting. The assigned channel frequency was considered to be the reference frequency. The temperature was then reduced to -30 degrees C after which the transmitter was again allowed to stabilize for one hour.The transmitter was keyed ON for one minute, and again frequency readings were noted at 15 second intervals. The worst case number was recorded for temperature plotting. This procedure was repeated in 10 degree increments up to + 50 degrees C.

Readings were also taken at minus 25% of the battery voltage of 13.6, which we estimate to be the battery endpoint.

MEASUREMENT DATA:

Assigned Frequency (Ref. Frequency): 464.599 620 MHz

TEMPERATURE_°C	FREQUENCY_MHz	PPM
REFERENCE_____	464.599 620	0.00
-30_____	464.599 915	+ 0.64
-20_____	464.599 881	+ 0.56
-10_____	464.599 925	+ 0.66
0_____	464.599 863	+ 0.52
+10_____	464.599 858	+ 0.51
+20_____	464.599 763	+ 0.31
+30_____	464.599 593	- 0.06
+40_____	464.599 445	- 0.38
+50_____	464.599 387	- 0.50

-15% Battery End-Point VDC	464.599 613	- 0.02
+15% Battery End-Point VDC	464.599 630	+ 0.02

RESULTS OF MEASUREMENTS: The maximum frequency variation over the temperature range was -.50 TO +.66 ppm.

2.1055(a)(1) Frequency stability:
90.214 Transient Frequency Behavior

REQUIREMENTS: In the 450-500MHz frequency band, transient frequencies must be within the maximum frequency difference limits during the time interval indicated below for 12.5kHz Channels:

Time Interval	Maximum Frequency	UHF Radios 450-500 MHz
t1	+12.5 kHz	10.0 ms
t2	+6.25 kHz	25.0 ms
t3,t4	+12.5 kHz	10.0 mS

TEST PROCEEDURE: TIA/EIA TS603 PARA 2.2.19, the levels were set as follows;

1. Using the varible attenuator the transmitter level was set to 40dB below the test recievers maximum input level, then the transmitter was turned off.
2. With the Transmitter off the signal generator was set 20dB below the level of the transmitter in the above step, this level will be maintained with the signal generator through-out the test.
3. Reduce the attenuation between the transmitter and the RF detector by 30dB.
4. With the levels set as above the transient frequency behavior was observed & recorded.

2.1055 Frequency stability:
90.214 Transient Frequency Behavior
(Continued)

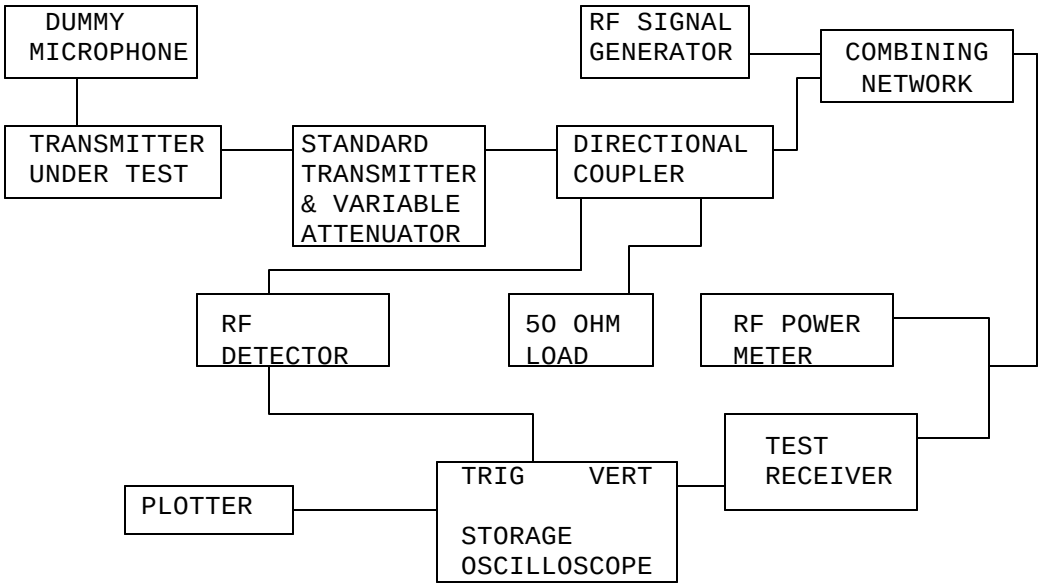

TRANSIENT FREQUENCY RESPONSE - 12.5 kHz DEVIATION

FCC ID: PT9SDU-7000

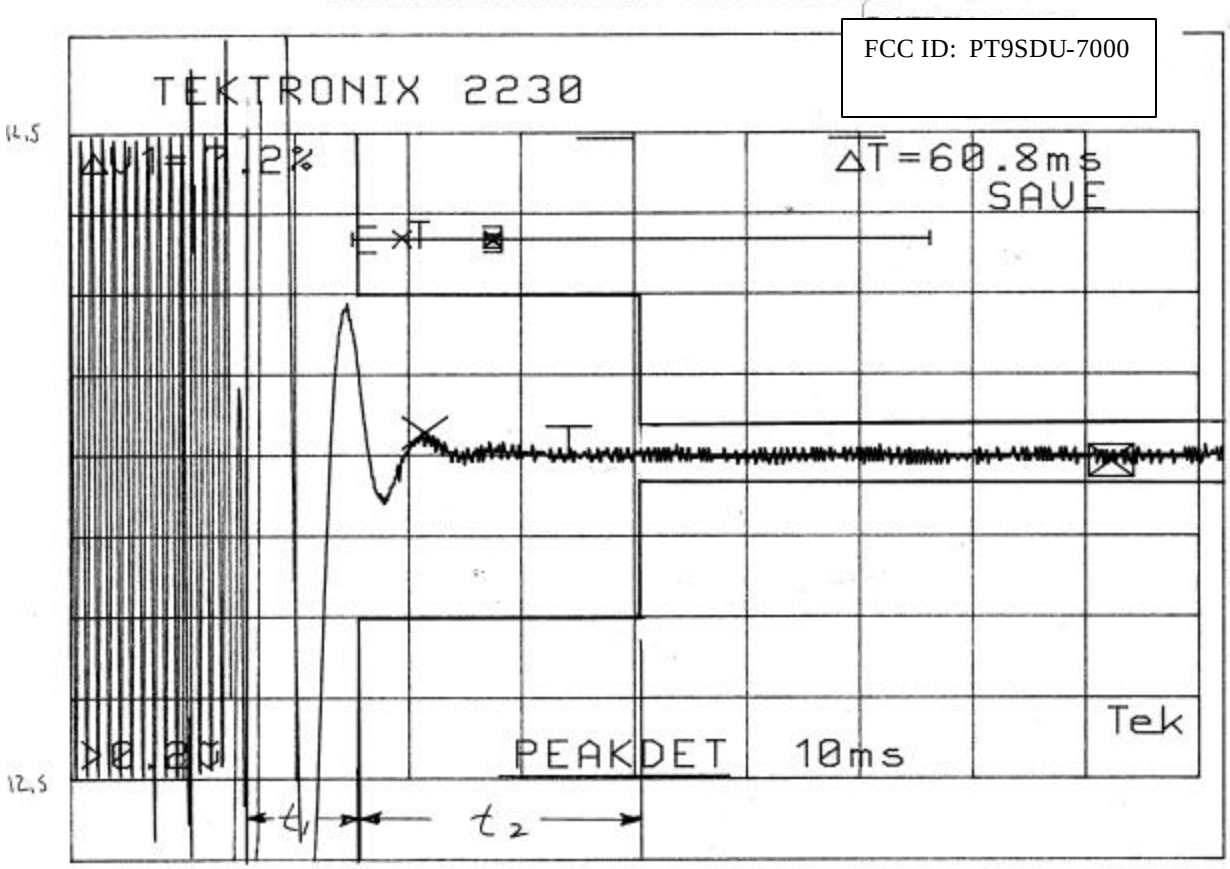

TRANSIENT FREQUENCY RESPONSE - 12.5 kHz DEVIATION

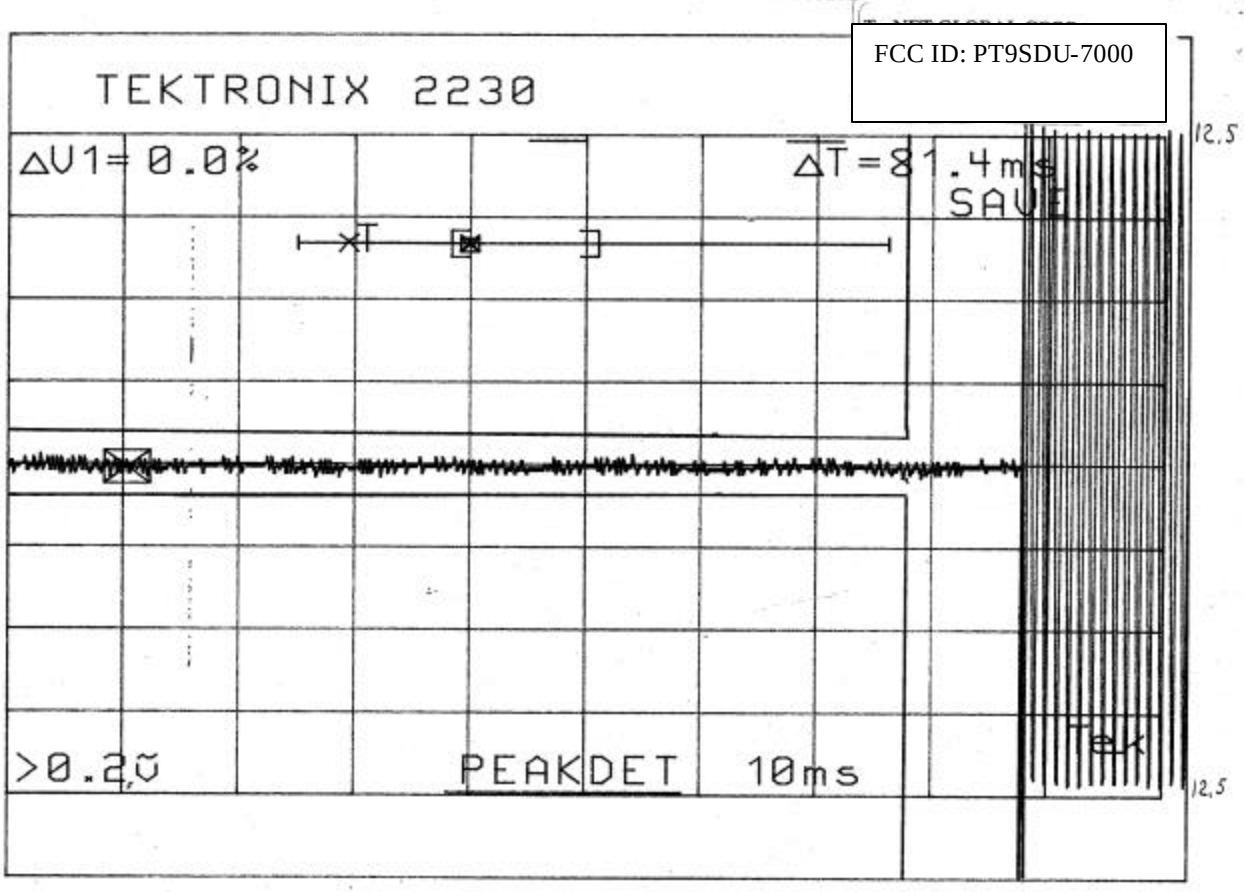

TRANSIENT FREQUENCY RESPONSE - 25 kHz DEVIATION

FCC ID: PT9SDU-7000

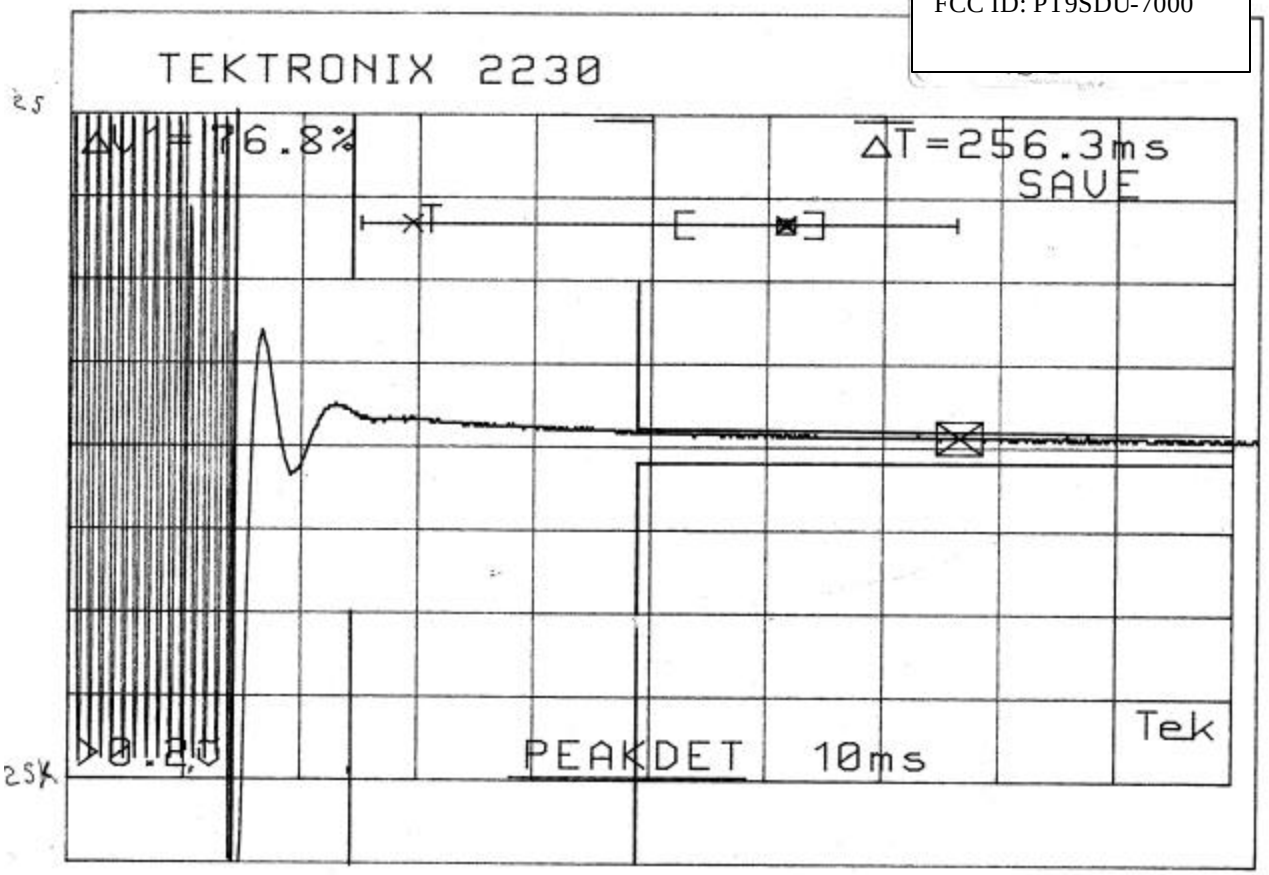

TRANSIENT FREQUENCYRESPONSE - 25 kHz DEVIATION

FCC ID: PT9SDU-7000

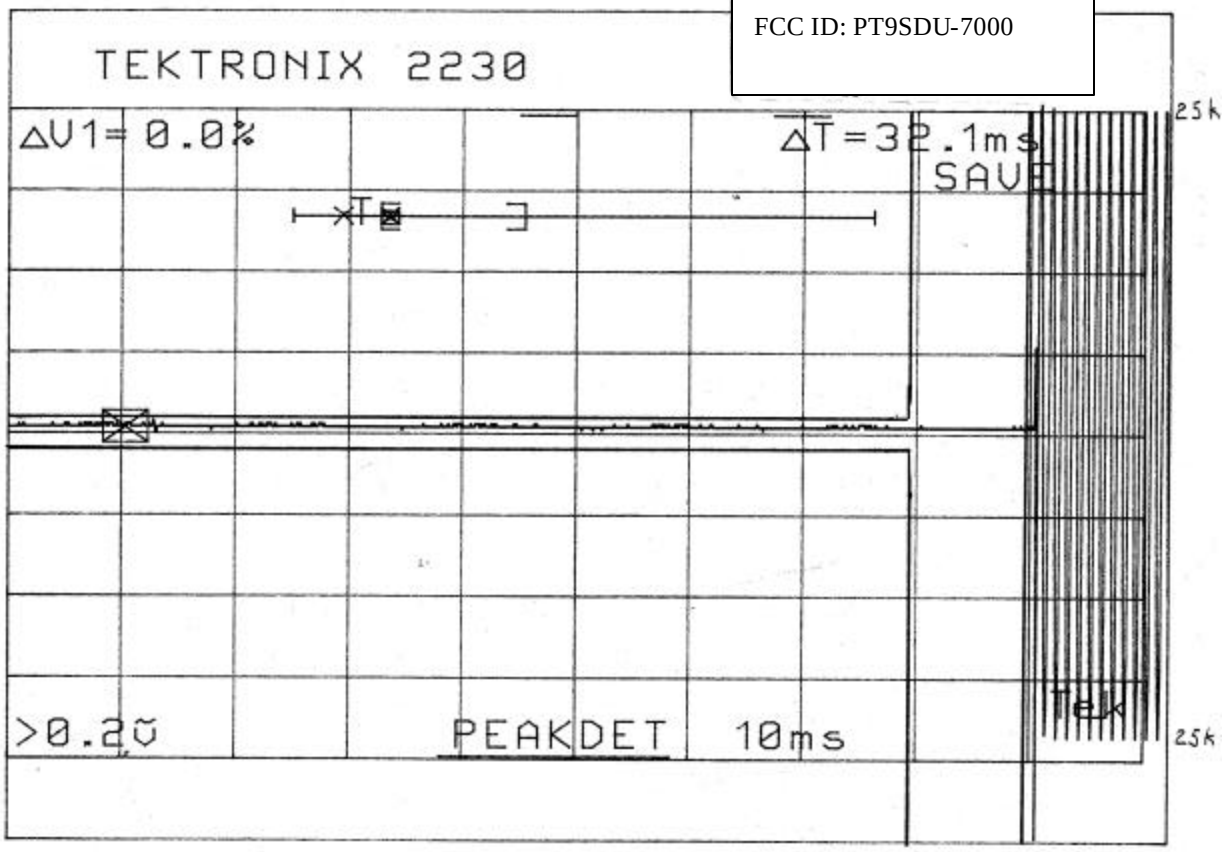

TEST EQUIPMENT LIST

1._X_Spectrum Analyzer: HP 8566B-Opt 462, S/N 3138A07786, w/ preselector HP 85685A, S/N 3221A01400, Quasi-Peak Adapter HP 8565OA, S/N 3303A01690 & Preamplifier HP 8449B-OPT H02, S/N 3008A00372 Cal. 8/31/01 Due 8/31/02
2._X_Biconnical Antenna: Eaton Model 94455-1, S/N 1057, Cal. 10/1/01 Due 10/1/02
3.___Biconnical Antenna: Electro-Metrics Model BIA-25, S/N 1171 Cal. 4/26/01 Due 4/26/03
4._X_Log-Periodic Antenna: Electro-Metrics Model EM-6950, S/N 632 Char. 3/15/00 Due 3/15/01
5.__ Log-Periodic Antenna: Electro-Metrics Model LPA-30, S/N 409 Char. 3/15/00 Due 3/15/01
6._X_Double-Ridged Horn Antenna: Electro-Metrics Model RGA-180, 1-18 GHz, S/N 2319 Cal. 4/27/99 Due 4/27/00
7.__ 18-26.3GHz Systron Donner Standard Gain Horn #DBE-520-20 No Cal Required
8.__ Horn 40-60GHz: ATM Part #19-443-6R No Cal Required
9.__ Line Impedance Stabilization Network: Electro-Metrics Model EM-7820, w/NEMA Adapter S/N 2682 Cal. 3/16/01 Due 3/16/02
10._X_Temperature Chamber: Tenney Engineering Model TTRC, S/N 11717-7 Char. 1/27/01 Due 1/27/02
11.__ Frequency Counter: HP Model 5385A, S/N 3242A07460 Char. 11/20/00 Due 11/20/01
12.__ Peak Power Meter: HP Model 8900C, S/N 2131A00545 Char. 1/26/01 Due 1/26/02
13._X_Open Area Test Site #1-3meters Cal. 12/22/99
14.__ Signal Generator: HP 8640B, S/N 2308A21464 Cal. 11/15/01 Due 11/15/02
15.__ Passive Loop Antenna: EMCO Model 6512, 9KHz to 30MHz, S/N 9706-1211 Char. 6/10/00 Due 6/10/01
16.__ Dipole Antenna Kit: Electro-Metrics Model TDA-30/1-4, S/N 153 Char. 11/24/00 Due 11/24/01
17.__ AC Voltmeter: HP Model 400FL, S/N 2213A14499 Cal. 10/9/01 Due 10/09/02
18._X_Digital Multimeter: Fluke Model 77, S/N 43850817 Cal. 11/16/00 Due 11/16/01
19._X_Oscilloscope: Tektronix Model 2230, S/N 300572 Char. 2/1/01 Due 2/1/02