MEASUREMENT REPORT

of

27MHz Wireless Mouse

Applicant	**:**	TopSeed Technology Corp.
FCC ID	**:**	PTITSCM-2704
EUT	**:**	Wireless Optical Mouse
Report No.	**:**	AA515996

Test by :

Training Research Co., Ltd.

TEL : 886-2-26935155 **FAX : 886-2-26934440**

No. 255, Nan-yang Street, Shijr, Taipei Hsien 221, Taiwan

CERTIFICATION

We here by verify that:

The test data, data evaluation, test procedures and equipment configurations shown in this report were made mainly in accordance with the procedures given in ANSI C63.4 (2003) as a reference. All tests were conducted by ***Training Research Co., Ltd.***, No. 255, Nan-yang Street, Shijr, Taipei Hsien 221, Taiwan. Also, we attest to the accuracy of each.

We further submit that the energy emitted by the sample EUT tested as described in the report is **in compliance with** the technical requirements set forth in the FCC Rules Part 15 Subpart C Section 15.227.

Applicant	:	TopSeed Technology Corp.
Applicant address	:	9F-3, No. 16, Jain Ba Road, Chung Ho City, Taipei Hsien, Taiwan 235
FCC ID	:	PTITSCM-2704
Test Date	:	September 13, 2004

Prepared by: *JACK TSAI*

Approved by: *FRANK TSAI*

Conditions of issue :

(1) ***This test report shall not be reproduced except in full, without written approval of TRC. And the test result contained within this report only relate to the sample submitted for testing.***

(2) ***This report must not be used by the client to claim product endorsement by NVLAP or any agency of U.S. Government.***

(3) ***This test report, measurements made by TRC are traceable to the NIST only Conducted and Radiated Method.***

★ NVLAP LAB CODE: 200174-0

Tables of Contents

CHAPTER 1 GENERAL 4

1.1 INTRODUCTION 4

1.2 DESCRIPTION OF EUT 4

1.3 TEST METHOD 4

1.4 DESCRIPTION OF SUPPORT EQUIPMENT 4

1.5 TEST PROCEDURE 5

1.6 LOCATION OF THE TEST SITE 5

1.7 GENERAL TEST CONDITION 5

CHAPTER 2 CONDUCTED EMISSIONS MEASUREMENTS 6

2.1 TEST CONDITION & SETUP 6

2.2 LIST OF TEST INSTRUMENTS 6

2.3 TEST RESULT OF CONDUCTED EMISSIONS 6

CHAPTER 3 RADIATED EMISSION MEASUREMENTS 7

3.1 HARMONIC AND SPURIOUS EMISSION 7

3.1.1 Test Condition and Setup 7

3.1.2 List of Test Instruments 8

3.1.3 Configuration of System Under Test 8

3.1.4 Test Result of Harmonic and Spurious Emission 9

3.2 PEAK POWER MEASUREMENT OF FUNDAMENTAL FREQUENCY 10

3.2.1 Test Condition and Setup 10

3.2.2 List of Test Instruments 10

3.2.3 Configuration of System Under Test 10

3.2.4 Test Result of Fundamental Emission 11

3.3 TEST RESULT OF THE BANDEDGE 12

Chapter 1 General

1.1 Introduction

The following measurement report is submitted on behalf of Applicant in support of a RF mouse certification in accordance with Part 2 Subpart J and Part 15 Subpart C of the Commission's Rules and Regulations.

1.2 Description of EUT

Product Name	:	Wireless Optical Mouse
Model	:	TSCM-2704
Part No.	:	MSCM0004-2704
Frequency Range	:	26.96MHz ~ 27.28MHz
Operating Frequency	:	27.04MHz
Modulation Skill	:	FSK
Power Type	:	Powered by DC3V (SIZE AA*2 batteries)

1.3 Test method

All measurements contained in this report were performed according to the techniques described in Measurement procedure ANSI C63.4 – 2003.

Pretest was found that the emission of operating mode is worse than standby mode. So, the final test is made at the operating mode (transmitted). The EUT set in 27.04MHz and continuously transmitting mode, which transmitted the maximum emission.

The test placement as the photographs showed is the worst case emission placed. (If the emission is close to the ambient, the resolution BW and view resolution will be reduced and the data will be recorded by detection of maximum hold peak mode.)

1.4 Description of Support Equipment

No support equipment: The EUT itself forms a system. No support equipment is requited for its normal operation.

1.5 Test Procedure

All measurements contained in this report were performed mainly according to the techniques described in Measurement procedure ANSI C63.4 (2003).

1.6 Location of the Test Site

The radiated emissions measurements required by the rules were performed on the **three-meter**, **Anechoic Chamber (FCC Registration Number: 93906)** maintained by *Training Research Co., Ltd.* 1F, No. 255, Nan-yang Street, Shijr, Taipei Hsien 221, Taiwan, R.O.C. Complete description and measurement data have been placed on file with the commission. The conducted power line emissions tests and other test items were performed in an anechoic chamber also located at Training Research Co., Ltd. 1F, No. 255, Nan-yang Street, Shijr, Taipei Hsien 221, Taiwan, R.O.C. *Training Research Co., Ltd.* is listed by the FCC as a facility available to do measurement work for others on a contract basis.

1.7 General Test Condition

The conditions under which the EUT operates were varied to determine their effect on the equipment's emission characteristics. The final configuration of the test system and the mode of operation used during these tests was chosen as that which produced the highest emission levels. However, only those conditions which the EUT was considered likely to encounter in normal use were investigated.

In test, they were set in high power and continuously transmitting mode. The setting up procedure is recorded on 1.3 Test Method.

Chapter 2 Conducted Emissions Measurements

2.1 Test Condition & Setup

The EUT operates solely by the batteries (SIZE AA battery * 2).

According to the rule of section 15.207(c). The EUT exempt to the power line conducted test.

2.2 List of Test Instruments

N/A (Not applicable)

2.3 Test Result of Conducted Emissions

N/A (Not applicable)

Chapter 3 Radiated Emission Measurements

3.1 Harmonic and Spurious Emission

3.1.1 Test Condition and Setup

Pretest:

Prior to the final test ,the EUT is placed in an anechoic chamber, and scan from 27MHz to 1GHz. The devices to determine which attitude and configuration produces the highest emission relative to the limit. This is done to ensure the radiation exactly emits form the EUT.

Final test:

Final radiation measurements is made on a **3–meter** anechoic chamber.. The EUT's maximum emission of radiation is placed on a nonconductive table, which is 0.8m height, the top surface is 1.0 x 1.5 meter. All placement is according to ANSI C63.4 - 2003.

The spectrum is examined from 30MHz to 1000MHz measured by HP spectrum. The whole range antenna is used to measure frequency from 30MHz to 1GHz.

The final test is used the spectrum analyzer. Measure more than six top marked frequencies generated form pretest by computer step by step at each frequency. The EUT is rotated 360 degrees, and antenna is raised and lowered from 1 to 4 meters to find the maximum emission levels. The antenna is used with both horizontal and vertical polarization.

Appropriated preamplifier, which is made by TRC is used for improving sensitivity and precautions is taken to avoid overloading. The spectrum analyzer's 6dB bandwidth is set to 120 kHz, and the EUT is measured at quasi-peak mode. (30MHz to 1GHz)

If the emission is close to the frequency band of ambient, the tester will recheck the data and the corrected data will be written in the test data sheet. If the emission is just within the ambient, the data from shield room will be taken as the final data.

3.1.2 List of Test Instruments

Instrument Name	Model	Brand	Serial No.	Calibration Date Next time
EMI Receiver	8546A	HP	3520A00242	08/05/05
RF Filter Section	85460A	HP	3448A00217	08/05/05
Small Biconical Antenna	UBAA9114 & BBVU9135	SCHWARZECK	127	09/21/04
Pre-amplifier	PA1F	TRC	1FAC	05/20/05
Auto Switch Box (>30MHz)	ASB-01	TRC	9904-01	05/20/05
Coaxial Cable (Double shielded, 15 meter)	A30A30-0058-50FS-15M	JYEBAO	SMA-01	05/20/05
Coaxial Cable (1.1 meter)	A30A30-0058-50FS-1M	JYEBAO	SMA-02	05/20/05

3.1.3 Configuration of System Under Test

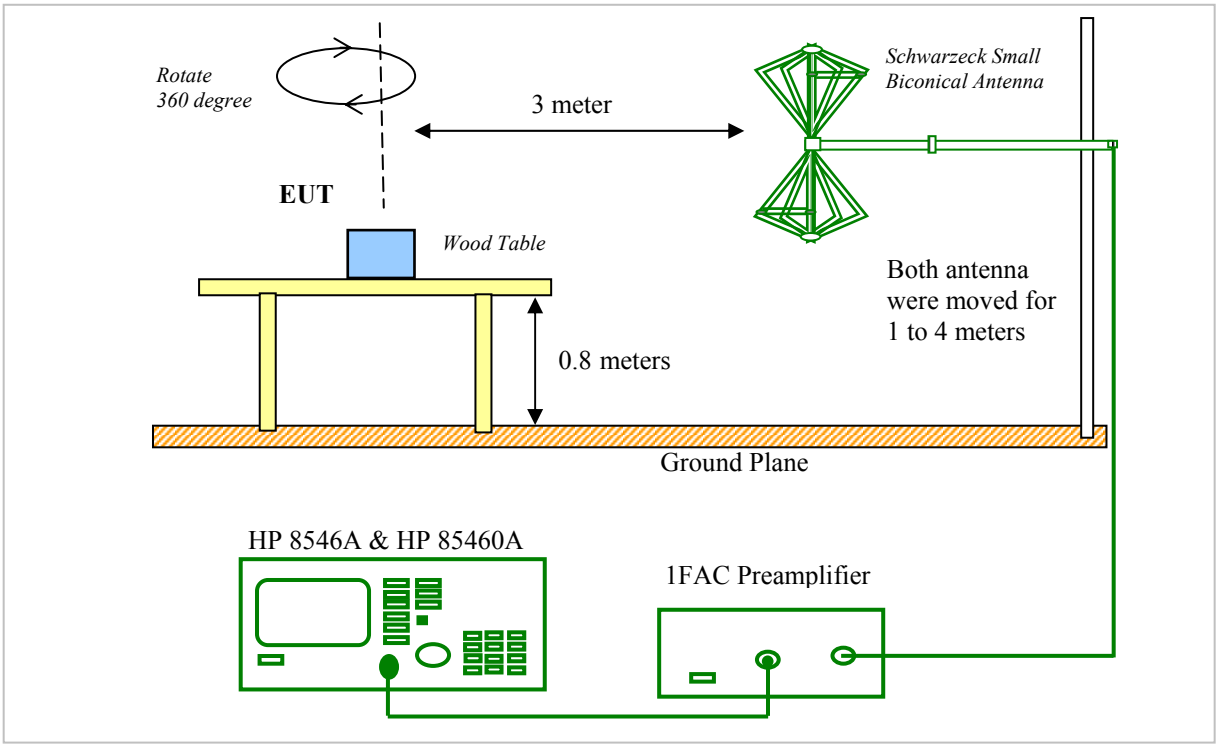

3.1.4 Test Result of Harmonic and Spurious Emission

The highest peak values of radiated emissions form the EUT at various antenna heights, antenna polarization, EUT orientation, etc. are recorded on the following.

Testing room : Temperature : 25 ° C Humidity : 73 % RH

Test Result of Harmonic and Spurious Emission for Horizontal

Frequency	Reading Amplitude	Ant. Height	Table	Correction Factors	Corrected Amplitude	Class B Limit	Margin
MHz	dBμV	m	degree	dB/m	dBμV/m	dBμV/m	dB
118.51	31.78	1.00	55	-2.09	29.69	43.50	-13.81
130.64	36.36	1.00	55	-2.65	33.71	43.50	-9.79
143.97	33.25	1.00	46	-2.97	30.28	43.50	-13.22
219.15	28.35	1.00	299	-3.96	24.39	46.00	-21.61
245.82	32.60	1.00	325	-4.01	28.59	46.00	-17.41
353.74	27.49	1.00	195	-2.60	24.89	46.00	-21.11

Test Result of Harmonic and Spurious Emission for Vertical

Frequency	Reading Amplitude	Ant. Height	Table	Correction Factors	Corrected Amplitude	Class B Limit	Margin
MHz	dBμV	m	degree	dB/m	dBμV/m	dBμV/m	dB
39.70	27.88	1.00	60	5.83	33.71	40.00	-6.29
68.80	23.96	1.00	29	1.45	25.41	40.00	-14.59
90.62	32.33	1.00	3	-0.47	31.86	43.50	-11.64
99.11	26.52	1.00	210	-1.15	25.37	43.50	-18.13
164.59	25.53	1.00	279	-3.62	21.91	43.50	-21.59
288.26	29.86	1.00	84	-3.80	26.06	46.00	-19.94

Note:

1. Margin = Amplitude – limit, *if margin is minus means under limit.*
2. Corrected Amplitude = Reading Amplitude + Correction Factors
3. Correction factor = Antenna factor + (Cable Loss – Amplitude gain) + Switching Box Loss

3.2 Peak Power Measurement of Fundamental Frequency

3.2.1 Test Condition and Setup

A) The EUT was setup in the anechoic chamber

B) Set the Loop Antenna height 1m, Vertical and rotate the antenna to find the azimuth of the highest emission and record the reading.

C) Keep the antenna azimuth and turn the EUT 360 degree and record the highest emission.

D) Raise the antenna to 2 meters and repeat set (B) and (C).

E) Change the antenna Horizontal and repeat (B) to (D).

F) Record the highest reading in test report.

3.2.2 List of Test Instruments

Instrument Name	Model	Brand	Serial No.
EMI Receiver	8546A	HP	3520A00242
RF Filter Section	85460A	HP	3448A00217
Active Loop Antenna	6502	EMCO	2777

3.2.3 Configuration of System Under Test

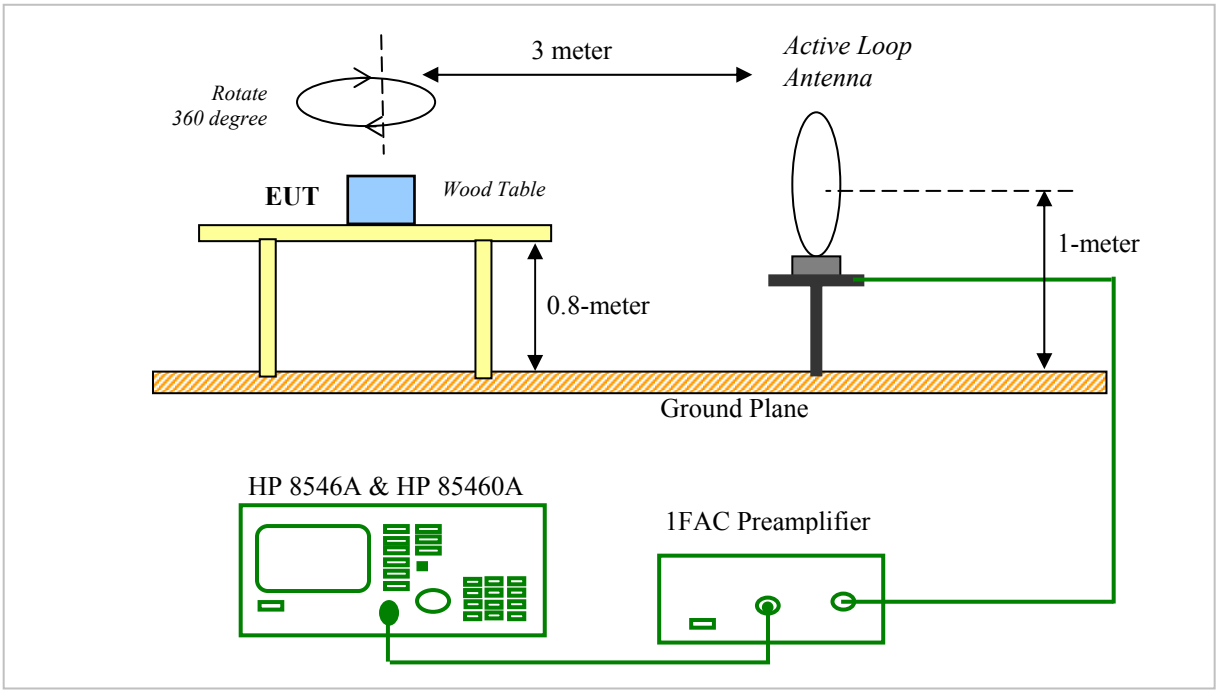

3.2.4 Test Result of Fundamental Emission

Testing room : Temperature : 25 ° C Humidity : 73 % RH

Test Result of Fundamental Emission for Horizontal

Frequency	Reading Amplitude	Ant. Height	Table	Correction Factors	Corrected Amplitude	Class B Limit	Margin
MHz	dBμV	m	degree	dB/m	dBμV/m	dBμV/m	dB
27.05	56.36	2.37	9	-13.24	43.12	80.00	-36.88

Frequency	Reading Amplitude	Ant. Height	Table	Correction Factors	Corrected Amplitude	Class B Limit	Margin
MHz	dBμV	m	degree	dB/m	dBμV/m	dBμV/m	dB
26.29	15.38	2.37	99	-13.21	2.17	48.52	-46.35
27.28	22.76	2.37	16	-13.25	9.51	48.52	-39.01
29.25	24.58	2.37	84	-13.32	11.26	48.52	-37.26

Test Result of Fundamental Emission for Vertical

Frequency	Reading Amplitude	Ant. Height	Table	Correction Factors	Corrected Amplitude	Class B Limit	Margin
MHz	dBμV	m	degree	dB/m	dBμV/m	dBμV/m	dB
27.05	47.31	1.00	250	-13.42	33.89	80.00	-46.11

Frequency	Reading Amplitude	Ant. Height	Table	Correction Factors	Corrected Amplitude	Class B Limit	Margin
MHz	dBμV	m	degree	dB/m	dBμV/m	dBμV/m	dB
26.29	13.18	1.00	323	-13.32	-0.14	48.52	-48.66
27.28	18.29	1.00	27	-13.47	4.82	48.52	-43.70
29.24	26.90	1.00	219	-13.81	13.09	48.52	-35.43

3.3 Test Result of the Bandedge

The following show our observations referring to the lowest channel and highest channel respectively. Test Condition & Setup same as 3.2.1 to 3.2.2.

Frequency Band: 26.96 ~ 27.28

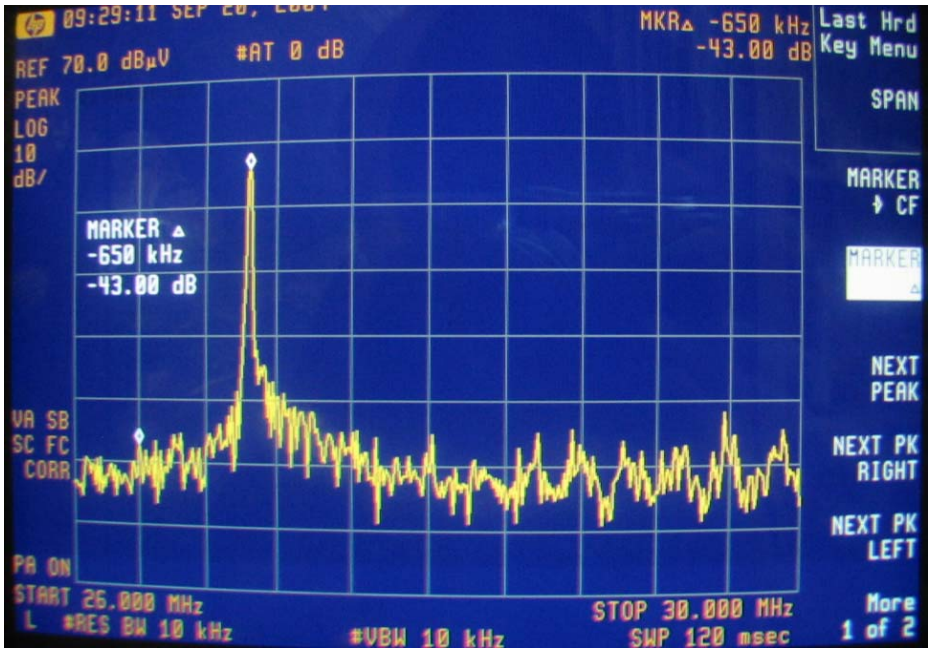

26.96MHz << Class B limit

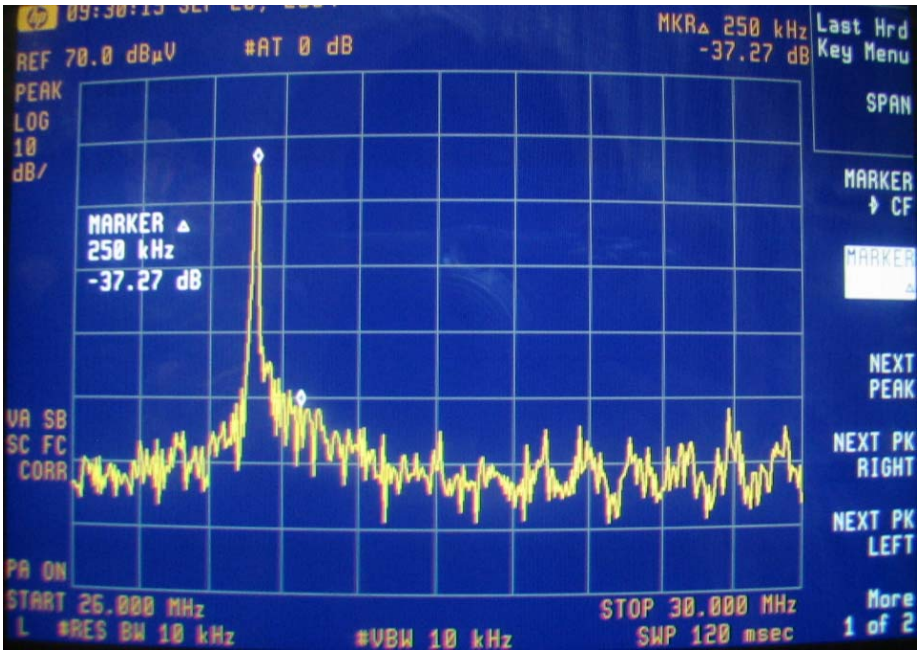

27.28MHz << Class B limit