FCC RF Test Report

APPLICANT	: Wistron Corporation
EQUIPMENT	: Notebook Computer
BRAND NAME	: Lenovo
MODEL NAME	: TP00076C
FCC ID	: PU5-TP00076CUC
STANDARD	: 47 CFR Part 2, 22(H), 24(E), 27
CLASSIFICATION	: PCS Licensed Transmitter (PCB)

Equipment: Sierra Wireless EM7455 and Intel 8265NGW tested inside of Lenovo Notebook Computer

This is a partial report which is included the radiated test item. The product was received on Nov. 03, 2016 and completely tested on Dec. 04, 2016. We, SPORTON INTERNATIONAL INC., would like to declare that the tested sample has been evaluated in accordance with the test procedures given in ANSI / TIA / EIA-603-D-2010 and the testing has shown the tested sample to be in compliance with the applicable technical standards.

The test results in this report apply exclusively to the tested model / sample. Without written approval of SPORTON INTERNATIONAL INC., the test report shall not be reproduced except in full.

Reviewed by: Joseph Lin / Supervisor

Approved by: Jones Tsai / Manager

Testing Laboratory
1190

SPORTON INTERNATIONAL INC.
No. 52, Hwa Ya 1st Rd., Hwa Ya Technology Park, Kwei-Shan District, Tao Yuan City, Taiwan, R.O.C.

TABLE OF CONTENTS

REVISION HISTORY **3**

SUMMARY OF TEST RESULT **4**

1 GENERAL DESCRIPTION **5**

1.1 Applicant 5
1.2 Manufacturer 5
1.3 Product Feature of Equipment Under Test 5
1.4 Product Specification of Equipment Under Test 6
1.5 Modification of EUT 6
1.6 Emission Designator 7
1.7 Testing Location 9
1.8 Applicable Standards 9

2 TEST CONFIGURATION OF EQUIPMENT UNDER TEST **10**

2.1 Test Mode 10
2.2 Connection Diagram of Test System 12
2.3 Support Unit used in test configuration and system 12
2.4 Frequency List of Low/Middle/High Channels 13

3 CONDUCTED TEST ITEMS **17**

3.1 Measuring Instruments 17
3.2 Test Setup 17
3.3 Test Result of Conducted Test 17
3.4 Conducted Output Power and ERP/EIRP 18

4 RADIATED TEST ITEMS **19**

4.1 Measuring Instruments 19
4.2 Test Setup 19
4.3 Test Result of Radiated Test 19
4.4 Radiated Spurious Emission 20

5 LIST OF MEASURING EQUIPMENT **21**

6 UNCERTAINTY OF EVALUATION **22**

APPENDIX A. TEST RESULTS OF CONDUCTED TEST

APPENDIX B. TEST RESULTS OF EIRP AND RADIATED TEST

APPENDIX C. TEST SETUP PHOTOGRAPHS

REVISION HISTORY

REPORT NO.	VERSION	DESCRIPTION	ISSUED DATE
FG6N0303-01B	Rev. 01	Initial issue of report	Dec. 19, 2016
FG6N0303-01B	Rev. 02	Revising frequency range of LTE band 41 in section 1.6	Dec. 23, 2016

SUMMARY OF TEST RESULT

Report Section	FCC Rule	Description	Limit	Result	Remark
3.4	§2.1046	Conducted Output Power	Reporting Only	PASS	-
	§22.913(a)(2)	Effective Radiated Power (Band 5) (Band 26)	ERP < 7 Watt		
	§27.50(b)(10) §27.50(c)(10)	Effective Radiated Power (Band 12) (Band 13)	ERP < 3 Watt		
	§24.232(c) §27.50(h)(2)	Equivalent Isotropic Radiated Power (Band 2)(Band 25) (Band 7)(Band 41)	EIRP < 2Watt		
	§27.50(d)(4)	Equivalent Isotropic Radiated Power (Band 4)	EIRP < 1Watt		
4.4	§2.1053 §22.917(a) §24.238(a) §27.53(c)(2) §27.53(f) §27.53(g) §27.53(h)	Radiated Spurious Emission (Band 2) (Band 4) (Band 5) (Band 12) (Band 13)(Band 25) (Band26)	< $43+10\log_{10}$(P[Watts])	PASS	Under limit 3.91 dB at 1568.000 MHz
	§2.1053 §27.53(m)(4)	Radiated Spurious Emission (Band 7)(Band 41)	< $55+10\log_{10}$(P[Watts])		

1 General Description

1.1 Applicant

Wistron Corporation
21F, No. 88, Sec. 1, Hsin Tai Wu Rd., Hsichih Dist, New Taipei City 221,Taiwan R.O.C.

1.2 Manufacturer

Wistron Corporation
21F, No. 88, Sec. 1, Hsin Tai Wu Rd., Hsichih Dist, New Taipei City 221,Taiwan R.O.C.

1.3 Product Feature of Equipment Under Test

Product Feature	
Equipment	Notebook Computer
Brand Name	Lenovo
Model Name	TP00076C
FCC ID	PU5-TP00076CUC
Integrated WWAN Module	Brand Name: Sierra Model Name: EM7455 FCC ID: N7NEM7455
Integrated WLAN Module	Brand Name: Intel Model Name: 8265NGW FCC ID: PD98265NG
EUT supports Radios application	WCDMA/HSPA/LTE WLAN 11a/b/g/n HT20/HT40 WLAN 11ac VHT20/VHT40/VHT80 Bluetooth BR/EDR/LE
EUT Stage	Production Unit

1.4 Product Specification of Equipment Under Test

Standards-related Product Specification	
Tx Frequency	LTE Band 2 : 1850.7 MHz ~ 1909.3 MHz LTE Band 4 : 1710.7 MHz ~ 1754.3 MHz LTE Band 5 : 824.7 MHz ~ 848.3 MHz LTE Band 7 : 2502.5 MHz ~ 2567.5 MHz LTE Band 12 : 699.7 MHz ~ 715.3 MHz LTE Band 13 : 779.5 MHz ~ 784.5 MHz LTE Band 25 : 1850.7MHz ~ 1914.3 MHz LTE Band 26 : 824.7MHz ~ 848.3 MHz LTE Band 41 : 2498.5 MHz ~ 2687.5 MHz
Rx Frequency	LTE Band 2 : 1930.7 MHz ~ 1989.3 MHz LTE Band 4 : 2110.7 MHz ~ 2154.3 MHz LTE Band 5 : 869.7 MHz ~ 893.3 MHz LTE Band 7 : 2622.5MHz ~ 2687.5 MHz LTE Band 12 : 729.7 MHz ~ 745.3 MHz LTE Band 13 : 748.5 MHz ~ 753.5 MHz LTE Band 25 : 1930.7MHz ~ 1994.3 MHz LTE Band 26 : 869.7MHz ~ 893.3MHz LTE Band 41 : 2498.5 MHz ~ 2687.5 MHz
Bandwidth	LTE Band 2 : 1.4MHz / 3MHz / 5MHz / 10MHz / 15MHz / 20MHz LTE Band 4 : 1.4MHz / 3MHz / 5MHz / 10MHz / 15MHz / 20MHz LTE Band 5 : 1.4MHz / 3MHz / 5MHz / 10MHz LTE Band 7 : 5MHz/ 10MHz / 15MHz / 20MHz LTE Band 12 : 1.4MHz / 3MHz / 5MHz / 10MHz LTE Band 13 : 5MHz / 10MHz LTE Band 25 : 1.4MHz / 3MHz / 5MHz / 10MHz / 15MHz / 20MHz LTE Band 26 : 1.4MHz / 3MHz / 5MHz / 10MHz / 15MHz LTE Band 41 : 5MHz / 10MHz / 15MHz / 20MHz
Maximum Output Power to Antenna	LTE Band 2 : 22.85 dBm LTE Band 4 : 23.83 dBm LTE Band 5 : 22.38 dBm LTE Band 7 : 21.80 dBm LTE Band 12 : 23.00 dBm LTE Band 13 : 22.57 dBm LTE Band 25 : 23.00 dBm LTE Band 26 : 22.74 dBm LTE Band 41 : 21.60 dBm
Type of Modulation	QPSK / 16QAM

1.5 Modification of EUT

No modifications are made to the EUT during all test items.

1.6 Emission Designator

LTE Band 2		QPSK	16QAM
BW(MHz)	Frequency Range (MHz)	Maximum EIRP(W)	Maximum EIRP(W)
1.4	1850.7 ~ 1909.3	0.1774	0.1489
3	1851.5 ~ 1908.5	0.1734	0.1479
5	1852.5 ~ 1907.5	0.1770	0.1524
10	1855.0 ~ 1905.0	0.1811	0.1521
15	1857.5 ~ 1902.5	0.1820	0.1521
20	1860.0 ~ 1900.0	0.1832	0.1528
LTE Band 25		QPSK	16QAM
BW(MHz)	Frequency Range (MHz)	Maximum EIRP(W)	Maximum EIRP(W)
1.4	1850.7 ~ 1914.3	0.1778	0.1521
3	1851.5 ~ 1913.5	0.1774	0.1486
5	1852.5 ~ 1912.5	0.1762	0.1535
10	1855.0 ~ 1910.0	0.1845	0.1521
15	1857.5 ~ 1907.5	0.1841	0.1581
20	1860.0 ~ 1905.0	0.1897	0.1589
LTE Band 4		QPSK	16QAM
BW(MHz)	Frequency Range (MHz)	Maximum EIRP(W)	Maximum EIRP(W)
1.4	1710.7 ~ 1754.3	0.1742	0.1503
3	1711.5 ~ 1753.5	0.1718	0.1466
5	1712.5 ~ 1752.5	0.1750	0.1510
10	1715.0 ~ 1750.0	0.1754	0.1489
15	1717.5 ~ 1747.5	0.1742	0.1514
20	1720.0 ~ 1745.0	0.1841	0.1507
LTE Band 5		QPSK	16QAM
BW(MHz)	Frequency Range (MHz)	Maximum ERP(W)	Maximum ERP(W)
1.4	824.7 ~ 848.3	0.0968	0.0843
3	825.5 ~ 847.5	0.0966	0.0817
5	826.5 ~ 846.5	0.0968	0.0838
10	829.0 ~ 844.0	0.0973	0.0818

LTE Band 7		QPSK	16QAM
BW(MHz)	Frequency Range (MHz)	Maximum EIRP(W)	Maximum EIRP(W)
5	2502.5 ~ 2567.5	0.1225	0.1045
10	2505.0 ~ 2565.0	0.1216	0.1042
15	2507.5 ~ 2562.5	0.1225	0.1035
20	2510.0 ~ 2560.0	0.1236	0.1067
LTE Band 12		QPSK	16QAM
BW(MHz)	Frequency Range (MHz)	Maximum ERP(W)	Maximum ERP(W)
1.4	699.7 ~ 715.3	0.1726	0.1452
3	700.5 ~ 714.5	0.1742	0.1449
5	701.5 ~ 713.5	0.1754	0.1545
10	704.0 ~ 711.0	0.1774	0.1503
LTE Band 26		QPSK	16QAM
BW(MHz)	Frequency Range (MHz)	Maximum ERP (W)	Maximum ERP (W)
1.4	824.7 ~ 848.3	0.1555	0.1366
3	825.5 ~ 847.5	0.1617	0.1382
5	826.5 ~ 846.5	0.1602	0.1414
10	829.0 ~ 844.0	0.1620	0.1389
15	831.5 ~ 841.5	0.1632	0.1389
LTE Band 13		QPSK	16QAM
BW(MHz)	Frequency Range (MHz)	Maximum ERP(W)	Maximum ERP(W)
5	779.5 ~ 784.5	0.1884	0.1603
10	782.0	0.1892	0.1589
LTE Band 41		QPSK	16QAM
BW(MHz)	Frequency Range (MHz)	Maximum EIRP(W)	Maximum EIRP(W)
5	2498.5 ~ 2687.5	0.1758	0.1489
10	2501.0 ~ 2685.0	0.1795	0.1469
15	2503.5 ~ 2682.5	0.1803	0.1510
20	2506.0 ~ 2680.0	0.1816	0.1439

1.7 Testing Location

Sporton Lab is accredited to ISO 17025 by Taiwan Accreditation Foundation (TAF code : 1190) and the FCC designation No. TW1022 under the FCC 2.948(e) by Mutual Recognition Agreement (MRA) in FCC Test.

Test Site	SPORTON INTERNATIONAL INC.
Test Site Location	No. 52, Hwa Ya 1st Rd., Hwa Ya Technology Park, Kwei-Shan District, Tao Yuan City, Taiwan, R.O.C. TEL: +886-3-327-3456 FAX: +886-3-328-4978
Test Site No.	**Sporton Site No.**
	TH02-HY

Test Site	SPORTON INTERNATIONAL INC.
Test Site Location	No.58, Aly. 75, Ln. 564, Wenhua 3rd Rd. Guishan Dist, Taoyuan City, Taiwan (R.O.C.) TEL: +886-3-327-0868 FAX: +886-3-327-0855
Test Site No.	**Sporton Site No.**
	03CH10-HY

1.8 Applicable Standards

According to the specifications of the manufacturer, the EUT must comply with the requirements of the following standards:

- 47 CFR Part 2, 22(H), 24(E), 27
- ANSI / TIA / EIA-603-D-2010
- FCC KDB 971168 D01 Power Meas. License Digital Systems v02r02
- FCC KDB 412172 D01 Determining ERP and EIRP v01r01

Remark: All test items were verified and recorded according to the standards and without any deviation during the test.

2 Test Configuration of Equipment Under Test

2.1 Test Mode

Radiated test items listed below are performed according to KDB 971168 D01 Power Meas. License Digital Systems v02r02 with maximum output power.

Radiated measurements are performed by rotating the EUT in three different orthogonal test planes to find the maximum emission.

Test Items	Band	Bandwidth (MHz)						Modulation		RB #			Test Channel		
		1.4	3	5	10	15	20	QPSK	16QAM	1	Half	Full	L	M	H
Max. Output Power	2	v	v	v	v	v	v	v	v	v	v	v	v	v	v
	4	v	v	v	v	v	v	v	v	v	v	v	v	v	v
	5	v	v	v	v	-	-	v	v	v	v	v	v	v	v
	7	-	-	v	v	v	v	v	v	v	v	v	v	v	v
	12	v	v	v	v	-	-	v	v	v	v	v	v	v	v
	13	-	-	v	v	-	-	v	v	v	v	v	v	v	v
	25	v	v	v	v	v	v	v	v	v	v	v	v	v	v
	26	v	v	v	v	v	-	v	v	v	v	v	v	v	v
	41	-	-	v	v	v	v	v	v	v	v	v	v	v	v
E.R.P./ E.I.R.P.	2	v	v	v	v	v	v	v	v	v			v	v	v
	4	v	v	v	v	v	v	v	v	v			v	v	v
	5	v	v	v	v	-	-	v	v	v			v	v	v
	7	-	-	v	v	v	v	v	v	v			v	v	v
	12	v	v	v	v	-	-	v	v	v			v	v	v
	13	-	-	v	v	-	-	v	v	v			v	v	v
	25	v	v	v	v	v	v	v	v	v			v	v	v
	26	v	v	v	v	v	-	v	v	v			v	v	v
	41	-	-	v	v	v	v	v	v	v			v	v	v

Radiated Spurious Emission	2	v	v	v	v	v	v	v		v			v	v	v
	4	v	v	v	v	v	v	v		v			v	v	v
	5	v	v	v	v	-	-	v		v			v	v	v
	7	-	-	v	v	v	v	v		v			v	v	v
	12	v	v	v	v	-	-	v		v			v	v	v
	13	-	-	v	v	-	-	v		v			v	v	v
	25	v	v	v	v	v	v	v		v			v	v	v
	26	v	v	v	v	v	-	v		v			v	v	v
	41	-	-	v	v	v	v	v		v			v	v	v
Note	1. The mark “v “ means that this configuration is chosen for testing 2. The mark “-“ means that this bandwidth is not supported. 3. The device is investigated from 30MHz to 10 times of fundamental signal for radiated spurious emission test under different RB size/offset and modulations in exploratory test. Subsequently, only the worst case emissions are reported.														

2.2 Connection Diagram of Test System

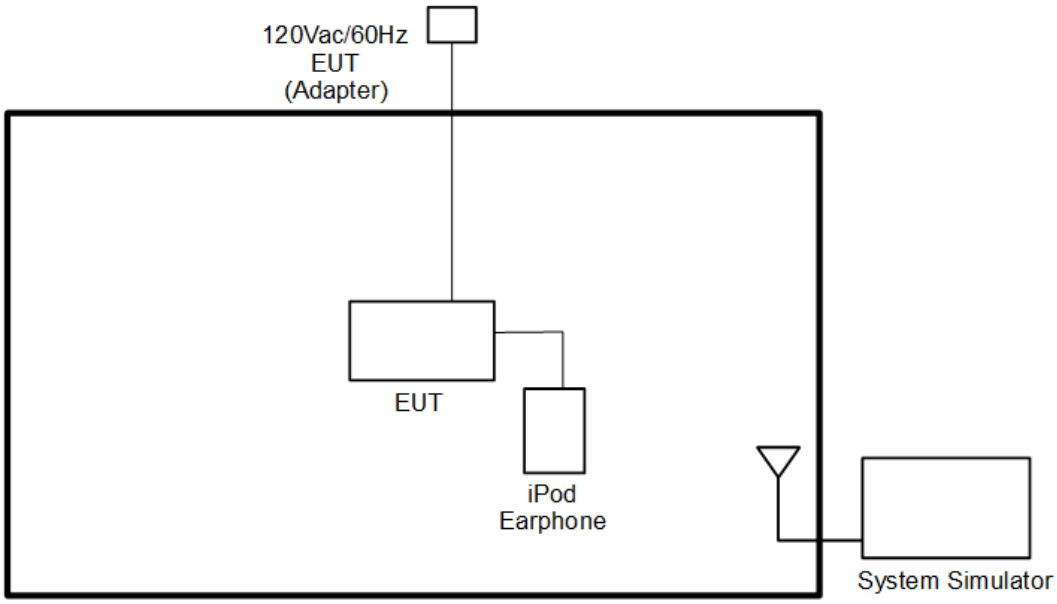

2.3 Support Unit used in test configuration and system

Item	Equipment	Trade Name	Model No.	FCC ID	Data Cable	Power Cord
1.	System Simulator	Anritsu	MT8820C	N/A	N/A	Unshielded, 1.8 m
2.	iPod Earphone	Apple	N/A	Verification	Unshielded, 1.0 m	N/A

2.4 Frequency List of Low/Middle/High Channels

LTE Band 2 Channel and Frequency List				
BW [MHz]	Channel/Frequency(MHz)	Lowest	Middle	Highest
20	Channel	18700	18900	19100
	Frequency	1860	1880	1900
15	Channel	18675	18900	19125
	Frequency	1857.5	1880	1902.5
10	Channel	18650	18900	19150
	Frequency	1855	1880	1905
5	Channel	18625	18900	19175
	Frequency	1852.5	1880	1907.5
3	Channel	18615	18900	19185
	Frequency	1851.5	1880	1908.5
1.4	Channel	18607	18900	19193
	Frequency	1850.7	1880	1909.3

LTE Band 4 Channel and Frequency List				
BW [MHz]	Channel/Frequency(MHz)	Lowest	Middle	Highest
20	Channel	20050	20175	20300
	Frequency	1720	1732.5	1745
15	Channel	20025	20175	20325
	Frequency	1717.5	1732.5	1747.5
10	Channel	20000	20175	20350
	Frequency	1715	1732.5	1750
5	Channel	19975	20175	20375
	Frequency	1712.5	1732.5	1752.5
3	Channel	19965	20175	20385
	Frequency	1711.5	1732.5	1753.5
1.4	Channel	19957	20175	20393
	Frequency	1710.7	1732.5	1754.3

LTE Band 5 Channel and Frequency List				
BW [MHz]	Channel/Frequency(MHz)	Lowest	Middle	Highest
10	Channel	20450	20525	20600
	Frequency	829	836.5	844
5	Channel	20425	20525	20625
	Frequency	826.5	836.5	846.5
3	Channel	20415	20525	20635
	Frequency	825.5	836.5	847.5
1.4	Channel	20407	20525	20643
	Frequency	824.7	836.5	848.3

LTE Band 7 Channel and Frequency List				
BW [MHz]	Channel/Frequency(MHz)	Lowest	Middle	Highest
20	Channel	20850	21100	21350
	Frequency	2510	2535	2560
15	Channel	20825	21100	21375
	Frequency	2507.5	2535	2562.5
10	Channel	20800	21100	21400
	Frequency	2505	2535	2565
5	Channel	20775	21100	21425
	Frequency	2502.5	2535	2567.5

LTE Band 12 Channel and Frequency List				
BW [MHz]	Channel/Frequency(MHz)	Lowest	Middle	Highest
10	Channel	23060	23095	23130
	Frequency	704	707.5	711
5	Channel	23035	23095	23155
	Frequency	701.5	707.5	713.5
3	Channel	23025	23095	23165
	Frequency	700.5	707.5	714.5
1.4	Channel	23017	23095	23173
	Frequency	699.7	707.5	715.3

LTE Band 13 Channel and Frequency List				
BW [MHz]	Channel/Frequency(MHz)	Lowest	Middle	Highest
10	Channel	-	23230	-
	Frequency	-	782	-
5	Channel	23205	23230	23255
	Frequency	779.5	782	784.5

LTE Band 25 Channel and Frequency List				
BW [MHz]	Channel/Frequency(MHz)	Lowest	Middle	Highest
20	Channel	26140	26340	26590
	Frequency	1860	1880	1905
15	Channel	26115	26340	26615
	Frequency	1857.5	1880	1907.5
10	Channel	26090	26340	26640
	Frequency	1855	1880	1910
5	Channel	26065	26340	26665
	Frequency	1852.5	1880	1912.5
3	Channel	26055	26340	26675
	Frequency	1851.5	1880	1913.5
1.4	Channel	26047	26340	26683
	Frequency	1850.7	1880	1914.3

LTE Band 26 Channel and Frequency List				
BW [MHz]	Channel/Frequency(MHz)	Lowest	Middle	Highest
15	Channel	26865	26915	26965
	Frequency	831.5	836.5	841.5
10	Channel	26840	26915	26990
	Frequency	829	836.5	844
5	Channel	26815	26915	27015
	Frequency	826.5	836.5	846.5
3	Channel	26805	26915	27025
	Frequency	825.5	836.5	847.5
1.4	Channel	26797	26915	27033
	Frequency	824.7	836.5	848.3

LTE Band 41 Channel and Frequency List				
BW [MHz]	Channel/Frequency(MHz)	Lowest	Middle	Highest
20	Channel	39750	40620	41490
	Frequency	2506	2593	2680
15	Channel	39725	40620	41515
	Frequency	2503.5	2593	2682.5
10	Channel	39700	40620	41540
	Frequency	2501	2593	2685
5	Channel	39675	40620	41565
	Frequency	2498.5	2593	2687.5

3 Conducted Test Items

3.1 Measuring Instruments

See list of measuring instruments of this test report.

3.2 Test Setup

3.2.1 Conducted Output Power

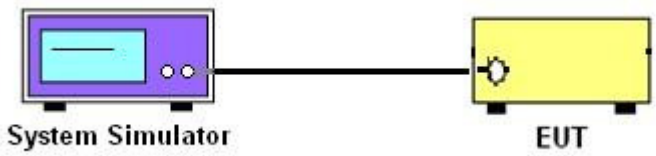

3.3 Test Result of Conducted Test

Please refer to Appendix A.

3.4 Conducted Output Power and ERP/EIRP

3.4.1 Description of the Conducted Output Power Measurement and ERP/EIRP Measurement

A system simulator was used to establish communication with the EUT. Its parameters were set to force the EUT transmitting at maximum output power. The measured power in the radio frequency on the transmitter output terminals shall be reported.

The ERP of mobile transmitters must not exceed 7 Watts for LTE Band 5.

The ERP of mobile transmitters must not exceed 3 Watts for LTE Band 12 and Band 13.

The EIRP of mobile transmitters must not exceed 2 Watts for LTE Band 2 and Band 25 and Band 7 and Band 41.

The EIRP of mobile transmitters must not exceed 1 Watts for LTE Band 4.

According to KDB 412172 D01 Power Approach,

EIRP = $P_T + G_T – L_C$, ERP = EIRP -2.15, where

P_T = transmitter output power in dBm

G_T = gain of the transmitting antenna in dBi

L_C = signal attenuation in the connecting cable between the transmitter and antenna in dB

3.4.2 Test Procedures

1. The transmitter output port was connected to the system simulator.
2. Set EUT at maximum power through the system simulator.
3. Select lowest, middle, and highest channels for each band and different modulation.
4. Measure and record the power level from the system simulator.

4 Radiated Test Items

4.1 Measuring Instruments

See list of measuring instruments of this test report.

4.2 Test Setup

4.2.1 For radiated test from 30MHz to 1GHz

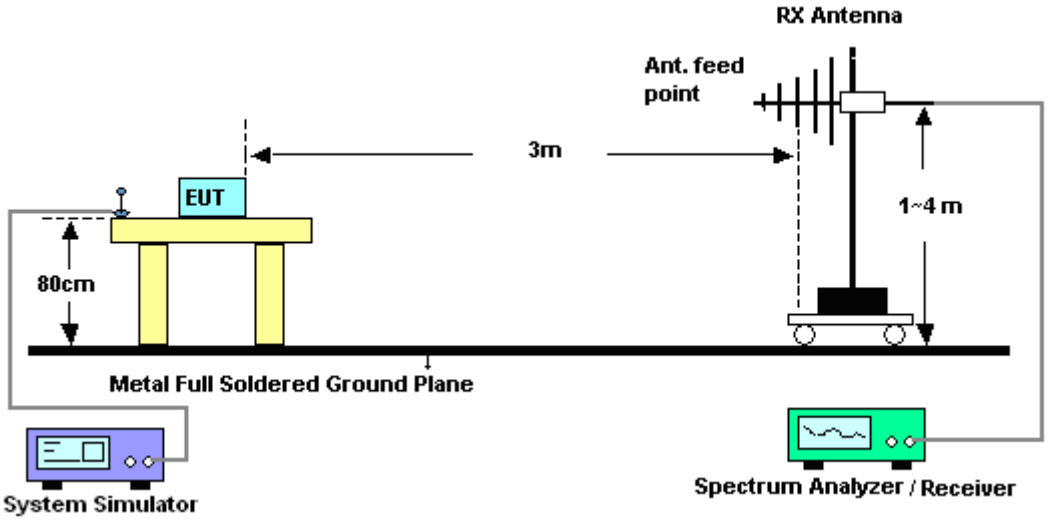

4.2.2 For radiated test above 1GHz

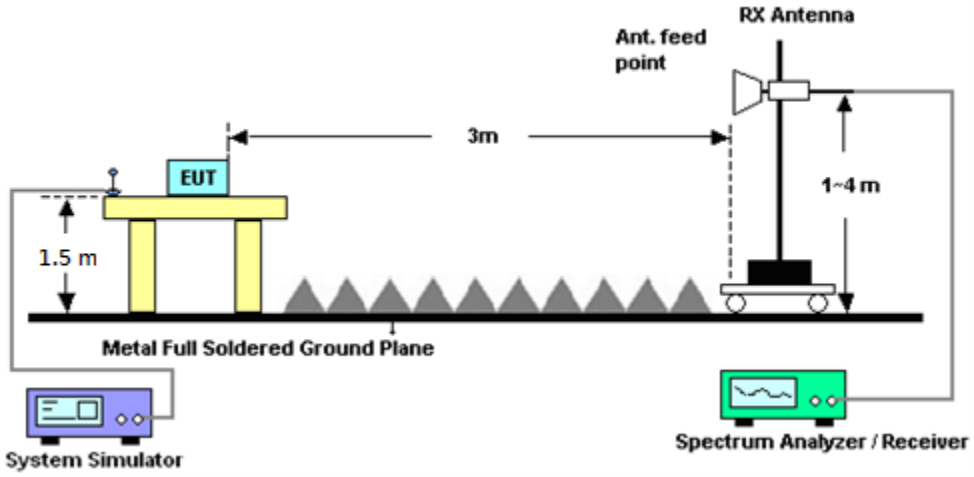

4.3 Test Result of Radiated Test

Please refer to Appendix B.

4.4 Radiated Spurious Emission

4.4.1 Description of Radiated Spurious Emission

The radiated spurious emission was measured by substitution method according to ANSI / TIA / EIA-603-D-2010. The power of any emission outside of the authorized operating frequency ranges must be attenuated below the transmitter power (P) by a factor of at least 43 + 10 log (P) dB.
For Band 7, 41
The power of any emission outside of the authorized operating frequency ranges must be attenuated below the transmitter power (P) by a factor of at least 55 + 10 log (P) dB.
For LTE Band 12,13
For operations in the 746-758 MHz, 775-788 MHz, and 805-806 MHz bands, emissions in the band 1559-1610 MHz shall be limited to −70 dBW/MHz equivalent isotropically radiated power (EIRP) for wideband signals, and −80 dBW EIRP for discrete emissions of less than 700 Hz bandwidth.
The spectrum is scanned from 30 MHz up to a frequency including its 10th harmonic.

4.4.2 Test Procedures

1. The testing follows FCC KDB 971168 v02r02 Section 5.8 and ANSI / TIA-603-D-2010 Section 2.2.12.
2. The EUT was placed on a turntable with 0.8 meter for frequency below 1GHz and 1.5 meter for frequency above 1GHz respectively above ground.
3. The EUT was set 3 meters from the receiving antenna, which was mounted on the antenna tower.
4. The table was rotated 360 degrees to determine the position of the highest spurious emission.
5. The height of the receiving antenna is varied between one meter and four meters to search the maximum spurious emission for both horizontal and vertical polarizations.
6. Make the measurement with the spectrum analyzer's RBW = 1MHz, VBW = 3MHz, taking the record of maximum spurious emission.
7. A horn antenna was substituted in place of the EUT and was driven by a signal generator.
8. Tune the output power of signal generator to the same emission level with EUT maximum spurious emission.
9. Taking the record of output power at antenna port.
10. Repeat step 7 to step 8 for another polarization.
11. The RF fundamental frequency should be excluded against the limit line in the operating frequency band.
    The limit line is derived from 43 + 10log(P)dB below the transmitter power P(Watts)
    = P(W)- [43 + 10log(P)] (dB)
    = [30 + 10log(P)] (dBm) - [43 + 10log(P)] (dB)
    = -13dBm.
12. For Band 7, 41:
    The limit line is derived from 55 + 10log(P)dB below the transmitter power P(Watts)
    EIRP (dBm) = S.G. Power – Tx Cable Loss + Tx Antenna Gain
    ERP (dBm) = EIRP - 2.15

5 List of Measuring Equipment

Instrument	Manufacturer	Model No.	Serial No.	Characteristics	Calibration Date	Test Date	Due Date	Remark
Base Station(Measu	Rohde & Schwarz	CMW500	116160	MIMO/LTE(FDD TDD with 42 43)	Mar. 02, 2016	Nov. 17, 2016 ~ Dec. 04, 2016	Mar. 01, 2017	Conducted (TH02-HY)
Amplifier	SONOMA	310N	187311	9kHz~1GHz	Oct. 26, 2016	Nov. 17, 2016 ~ Dec. 04, 2016	Oct. 25, 2017	Radiation (03CH10-HY)
Bilog Antenna	TESEQ	CBL 6111D&00800N	35413&02	30MHz~1GHz	Jan. 13, 2016	Nov. 17, 2016 ~ Dec. 04, 2016	Jan. 12, 2017	Radiation (03CH10-HY)
Horn Antenna	SCHWARZBECK	BBHA 9120 D	9120D-1325	1GHz ~ 18GHz	Sep. 30, 2016	Nov. 17, 2016 ~ Dec. 04, 2016	Sep. 29, 2017	Radiation (03CH10-HY)
Preamplifier	Keysight	83017A	MY53270078	1GHz~26.5GHz	Oct. 26, 2016	Nov. 17, 2016 ~ Dec. 04, 2016	Oct. 25, 2017	Radiation (03CH10-HY)
Spectrum Analyzer	Keysight	N9010A	MY54200485	10Hz ~ 44GHz	Oct. 17, 2016	Nov. 17, 2016 ~ Dec. 04, 2016	Oct. 16, 2017	Radiation (03CH10-HY)
Antenna Mast	EMEC	AM-BS-4500-B	N/A	1~4m	N/A	Nov. 17, 2016 ~ Dec. 04, 2016	N/A	Radiation (03CH10-HY)
Turn Table	EMEC	TT 2200	N/A	0~360 Degree	N/A	Nov. 17, 2016 ~ Dec. 04, 2016	N/A	Radiation (03CH10-HY)
SHF-EHF Horn Antenna	SCHWARZBECK	BBHA 9170	BBHA9170576	18GHz - 40GHz	Apr. 15, 2016	Nov. 17, 2016 ~ Dec. 04, 2016	Apr. 14, 2017	Radiation (03CH10-HY)
Preamplifier	MITEQ	JS44-18004000 -33-8P	1840917	18GHz- 40GHz	Jun. 14, 2016	Nov. 17, 2016 ~ Dec. 04, 2016	Jun. 13, 2017	Radiation (03CH10-HY)
Signal Generator	Anritsu	MG3694C	163401	0.1Hz~40GHz	Aug. 19, 2016	Nov. 17, 2016 ~ Dec. 04, 2016	Aug. 18, 2017	Radiation (03CH10-HY)
SHF-EHF Horn Antenna	SCHWARZBECK	BBHA 9170	BBHA9170584	18GHz- 40GHz	Nov. 08, 2016	Nov. 17, 2016 ~ Dec. 04, 2016	Nov. 07, 2017	Radiation (03CH10-HY)
Horn Antenna	SCHWARZBECK	BBHA 9120 D	9120D-1522	1G~18GHz	Mar. 31, 2016	Nov. 17, 2016 ~ Dec. 04, 2016	Mar. 30, 2017	Radiation (03CH10-HY)

6 Uncertainty of Evaluation

Uncertainty of Radiated Emission Measurement (30 MHz ~ 1000 MHz)

Measuring Uncertainty for a Level of Confidence of 95% (U = 2Uc(y))	3.17

Uncertainty of Radiated Emission Measurement (1 GHz ~ 18 GHz)

Measuring Uncertainty for a Level of Confidence of 95% (U = 2Uc(y))	3.48

Uncertainty of Radiated Emission Measurement (18 GHz ~ 40 GHz)

Measuring Uncertainty for a Level of Confidence of 95% (U = 2Uc(y))	4.00

Appendix A. Test Results of Conducted Test

Conducted Output Power(Average power)

LTE Band 2 Maximum Average Power [dBm]						
BW [MHz]	RB Size	RB Offset	Mod	Lowest	Middle	Highest
20	1	0	QPSK	22.77	**22.85**	22.84
20	1	49		22.57	22.72	22.75
20	1	99		22.35	22.51	22.63
20	50	0		21.66	21.78	21.77
20	50	24		21.74	21.73	21.77
20	50	50		21.61	21.74	21.67
20	100	0		21.60	21.75	21.73
20	1	0	16-QAM	22.02	22.06	22.06
20	1	49		21.79	22.03	21.98
20	1	99		21.64	21.72	21.88
20	50	0		20.68	20.76	20.62
20	50	24		20.71	20.73	20.71
20	50	50		20.57	20.69	20.64
20	100	0		20.61	20.75	20.72
15	1	0	QPSK	22.73	22.78	22.82
15	1	37		22.59	22.60	22.79
15	1	74		22.49	22.58	22.68
15	36	0		21.67	21.72	21.69
15	36	20		21.64	21.72	21.72
15	36	39		21.54	21.71	21.74
15	75	0		21.58	21.71	21.65
15	1	0	16-QAM	21.94	22.04	21.94
15	1	37		21.89	22.02	21.98
15	1	74		21.71	21.80	21.91
15	36	0		20.64	20.70	20.62
15	36	20		20.63	20.70	20.71
15	36	39		20.50	20.72	20.66
15	75	0		20.61	20.71	20.76

LTE Band 2 Maximum Average Power [dBm]						
BW [MHz]	RB Size	RB Offset	Mod	Lowest	Middle	Highest
10	1	0	QPSK	22.74	22.78	22.62
10	1	25		22.74	22.80	22.79
10	1	49		22.71	22.67	22.62
10	25	0		21.66	21.64	21.57
10	25	12		21.62	21.72	21.59
10	25	25		21.60	21.64	21.62
10	50	0		21.63	21.66	21.60
10	1	0	16-QAM	22.01	21.98	21.91
10	1	25		21.91	22.04	21.93
10	1	49		21.88	21.89	21.83
10	25	0		20.68	20.64	20.54
10	25	12		20.57	20.67	20.54
10	25	25		20.60	20.65	20.61
10	50	0		20.61	20.64	20.58
5	1	0	QPSK	22.67	22.70	22.66
5	1	12		22.68	22.69	22.63
5	1	24		22.64	22.58	22.59
5	12	0		21.59	21.60	21.55
5	12	7		21.66	21.68	21.55
5	12	13		21.54	21.55	21.51
5	25	0		21.62	21.67	21.52
5	1	0	16-QAM	21.93	21.96	21.96
5	1	12		21.92	22.05	21.95
5	1	24		21.90	21.83	21.89
5	12	0		20.62	20.62	20.55
5	12	7		20.62	20.66	20.57
5	12	13		20.55	20.58	20.53
5	25	0		20.61	20.66	20.50

LTE Band 2 Maximum Average Power [dBm]						
BW [MHz]	RB Size	RB Offset	Mod	Lowest	Middle	Highest
3	1	0	QPSK	22.51	22.56	22.51
3	1	8		22.54	22.61	22.53
3	1	14		22.59	22.56	22.57
3	8	0		21.51	21.60	21.48
3	8	4		21.56	21.63	21.53
3	8	7		21.54	21.52	21.53
3	15	0		21.55	21.58	21.50
3	1	0	16-QAM	21.80	21.77	21.69
3	1	8		21.85	21.92	21.87
3	1	14		21.83	21.73	21.78
3	8	0		20.61	20.67	20.52
3	8	4		20.65	20.67	20.58
3	8	7		20.61	20.59	20.58
3	15	0		20.45	20.58	20.53
1.4	1	0	QPSK	22.71	22.56	22.67
1.4	1	3		22.63	22.67	22.66
1.4	1	5		22.60	22.68	22.61
1.4	3	0		22.49	22.54	22.52
1.4	3	1		22.56	22.64	22.59
1.4	3	3		22.49	22.61	22.57
1.4	6	0		21.48	21.54	21.51
1.4	1	0	16-QAM	21.85	21.89	21.88
1.4	1	3		21.88	21.95	21.94
1.4	1	5		21.85	21.87	21.87
1.4	3	0		21.56	21.61	21.55
1.4	3	1		21.53	21.63	21.55
1.4	3	3		21.54	21.65	21.57
1.4	6	0		20.55	20.64	20.56

LTE Band 25 Maximum Average Power [dBm]						
BW [MHz]	RB Size	RB Offset	Mod	Lowest	Middle	Highest
20	1	0	QPSK	22.85	**23.00**	22.99
20	1	49		22.79	22.67	22.90
20	1	99		22.66	22.54	22.67
20	50	0		21.78	21.88	21.86
20	50	24		21.85	21.77	21.81
20	50	50		21.83	21.72	21.76
20	100	0		21.71	21.92	21.90
20	1	0	16-QAM	22.12	22.22	22.23
20	1	49		22.13	21.97	22.18
20	1	99		21.98	21.76	21.96
20	50	0		20.75	20.85	20.88
20	50	24		20.77	20.78	20.83
20	50	50		20.76	20.73	20.75
20	100	0		20.73	20.82	20.82
15	1	0	QPSK	22.80	22.87	22.83
15	1	37		22.84	22.80	22.85
15	1	74		22.71	22.64	22.80
15	36	0		21.72	21.79	21.84
15	36	20		21.79	21.86	21.82
15	36	39		21.75	21.71	21.80
15	75	0		21.65	21.80	21.87
15	1	0	16-QAM	22.06	22.13	22.21
15	1	37		21.99	21.96	22.09
15	1	74		21.99	21.88	22.04
15	36	0		20.74	20.81	20.77
15	36	20		20.82	20.90	20.76
15	36	39		20.74	20.75	20.78
15	75	0		20.67	20.81	20.82

LTE Band 25 Maximum Average Power [dBm]						
BW [MHz]	RB Size	RB Offset	Mod	Lowest	Middle	Highest
10	1	0	QPSK	22.75	22.88	22.79
10	1	25		22.79	22.85	22.75
10	1	49		22.55	22.57	22.68
10	25	0		21.52	21.67	21.69
10	25	12		21.48	21.59	21.72
10	25	25		21.50	21.60	21.70
10	50	0		21.57	21.60	21.69
10	1	0	16-QAM	21.96	22.04	22.03
10	1	25		21.84	21.97	21.97
10	1	49		21.74	21.78	22.01
10	25	0		20.53	20.69	20.70
10	25	12		20.52	20.61	20.68
10	25	25		20.55	20.62	20.69
10	50	0		20.56	20.60	20.65
5	1	0	QPSK	22.62	22.63	22.66
5	1	12		22.61	22.59	22.65
5	1	24		22.46	22.60	22.68
5	12	0		21.53	21.53	21.55
5	12	7		21.55	21.59	21.66
5	12	13		21.45	21.55	21.73
5	25	0		21.49	21.55	21.68
5	1	0	16-QAM	21.90	22.05	21.94
5	1	12		21.84	21.85	22.08
5	1	24		21.71	21.85	21.97
5	12	0		20.64	20.62	20.58
5	12	7		20.61	20.67	20.68
5	12	13		20.51	20.65	20.75
5	25	0		20.53	20.58	20.68

LTE Band 25 Maximum Average Power [dBm]						
BW [MHz]	RB Size	RB Offset	Mod	Lowest	Middle	Highest
3	1	0	QPSK	22.66	22.71	22.66
3	1	8		22.54	22.57	22.53
3	1	14		22.58	22.67	22.54
3	8	0		21.64	21.63	21.63
3	8	4		21.63	21.66	21.68
3	8	7		21.49	21.64	21.55
3	15	0		21.46	21.56	21.63
3	1	0	16-QAM	21.84	21.91	21.76
3	1	8		21.89	21.94	21.89
3	1	14		21.77	21.85	21.81
3	8	0		20.73	20.71	20.69
3	8	4		20.74	20.72	20.71
3	8	7		20.56	20.69	20.63
3	15	0		20.50	20.56	20.67
1.4	1	0	QPSK	22.71	22.68	22.69
1.4	1	3		22.63	22.64	22.72
1.4	1	5		22.51	22.66	22.61
1.4	3	0		22.52	22.61	22.56
1.4	3	1		22.58	22.62	22.67
1.4	3	3		22.44	22.55	22.54
1.4	6	0		21.51	21.50	21.55
1.4	1	0	16-QAM	21.89	22.04	22.00
1.4	1	3		21.88	21.88	22.00
1.4	1	5		21.82	21.92	21.94
1.4	3	0		21.51	21.64	21.64
1.4	3	1		21.67	21.72	21.66
1.4	3	3		21.57	21.61	21.58
1.4	6	0		20.63	20.69	20.66

LTE Band 4 Maximum Average Power [dBm]						
BW [MHz]	RB Size	RB Offset	Mod	Lowest	Middle	Highest
20	1	0	QPSK	23.63	**23.83**	23.71
20	1	49		23.59	23.64	23.60
20	1	99		23.48	23.49	23.46
20	50	0		22.64	22.73	22.70
20	50	24		22.69	22.64	22.68
20	50	50		22.67	22.67	22.66
20	100	0		22.61	22.65	22.63
20	1	0	16-QAM	22.89	22.92	22.83
20	1	49		22.88	22.93	22.96
20	1	99		22.72	22.66	22.76
20	50	0		21.70	21.71	21.67
20	50	24		21.78	21.61	21.70
20	50	50		21.69	21.53	21.59
20	100	0		21.72	21.63	21.74
15	1	0	QPSK	23.52	23.56	23.59
15	1	37		23.51	23.32	23.40
15	1	74		23.52	23.44	23.41
15	36	0		22.49	22.53	22.54
15	36	20		22.57	22.52	22.44
15	36	39		22.52	22.50	22.57
15	75	0		22.57	22.61	22.60
15	1	0	16-QAM	22.98	22.86	22.91
15	1	37		22.94	22.66	22.86
15	1	74		22.80	22.75	22.73
15	36	0		21.64	21.52	21.51
15	36	20		21.64	21.45	21.61
15	36	39		21.59	21.45	21.52
15	75	0		21.69	21.57	21.60

LTE Band 4 Maximum Average Power [dBm]						
BW [MHz]	RB Size	RB Offset	Mod	Lowest	Middle	Highest
10	1	0	QPSK	23.48	23.53	23.44
10	1	25		23.55	23.62	23.59
10	1	49		23.48	23.33	23.48
10	25	0		22.58	22.46	22.40
10	25	12		22.55	22.53	22.51
10	25	25		22.48	22.42	22.54
10	50	0		22.54	22.47	22.46
10	1	0	16-QAM	22.88	22.77	22.91
10	1	25		22.86	22.73	22.79
10	1	49		22.71	22.57	22.75
10	25	0		21.58	21.45	21.39
10	25	12		21.51	21.46	21.53
10	25	25		21.49	21.37	21.55
10	50	0		21.53	21.44	21.45
5	1	0	QPSK	23.54	23.51	23.58
5	1	12		23.56	23.44	23.57
5	1	24		23.45	23.39	23.61
5	12	0		22.53	22.44	22.63
5	12	7		22.55	22.42	22.65
5	12	13		22.43	22.38	22.55
5	25	0		22.55	22.38	22.62
5	1	0	16-QAM	22.82	22.75	22.89
5	1	12		22.96	22.71	22.90
5	1	24		22.84	22.65	22.97
5	12	0		21.53	21.47	21.63
5	12	7		21.54	21.38	21.63
5	12	13		21.44	21.35	21.53
5	25	0		21.56	21.32	21.59

LTE Band 4 Maximum Average Power [dBm]						
BW [MHz]	RB Size	RB Offset	Mod	Lowest	Middle	Highest
3	1	0	QPSK	23.53	23.51	23.53
3	1	8		23.49	23.39	23.45
3	1	14		23.51	23.43	23.48
3	8	0		22.56	22.42	22.53
3	8	4		22.54	22.44	22.50
3	8	7		22.47	22.47	22.53
3	15	0		22.50	22.39	22.49
3	1	0	16-QAM	22.74	22.72	22.75
3	1	8		22.78	22.71	22.84
3	1	14		22.82	22.62	22.80
3	8	0		21.64	21.44	21.60
3	8	4		21.58	21.45	21.54
3	8	7		21.51	21.48	21.55
3	15	0		21.50	21.37	21.29
1.4	1	0	QPSK	23.47	23.45	23.56
1.4	1	3		23.54	23.47	23.55
1.4	1	5		23.50	23.53	23.59
1.4	3	0		23.52	23.45	23.47
1.4	3	1		23.54	23.51	23.55
1.4	3	3		23.54	23.43	23.52
1.4	6	0		22.42	22.33	22.50
1.4	1	0	16-QAM	22.85	22.76	22.85
1.4	1	3		22.94	22.77	22.95
1.4	1	5		22.84	22.78	22.84
1.4	3	0		22.58	22.48	22.59
1.4	3	1		22.58	22.50	22.57
1.4	3	3		22.63	22.45	22.60
1.4	6	0		21.51	21.40	21.57

LTE Band 5 Maximum Average Power [dBm]						
BW [MHz]	RB Size	RB Offset	Mod	Lowest	Middle	Highest
10	1	0	QPSK	22.20	**22.38**	22.24
10	1	25		22.30	22.32	22.35
10	1	49		22.14	22.00	22.37
10	25	0		21.03	21.25	21.14
10	25	12		21.19	21.15	21.23
10	25	25		21.16	21.02	21.24
10	50	0		21.15	21.20	21.11
10	1	0	16-QAM	21.54	21.63	21.58
10	1	25		21.53	21.53	21.58
10	1	49		21.43	21.24	21.57
10	25	0		20.06	20.14	20.17
10	25	12		20.21	20.19	20.20
10	25	25		20.19	20.04	20.22
10	50	0		20.14	20.07	20.22
5	1	0	QPSK	22.36	22.12	22.13
5	1	12		22.35	22.10	22.06
5	1	24		22.19	22.14	22.23
5	12	0		21.27	21.05	21.13
5	12	7		21.35	21.13	21.18
5	12	13		21.24	21.06	21.14
5	25	0		21.24	21.13	21.16
5	1	0	16-QAM	21.67	21.36	21.38
5	1	12		21.73	21.50	21.50
5	1	24		21.47	21.44	21.53
5	12	0		20.30	20.11	20.18
5	12	7		20.32	20.20	20.24
5	12	13		20.20	20.19	20.21
5	25	0		20.25	20.19	20.12

LTE Band 5 Maximum Average Power [dBm]						
BW [MHz]	RB Size	RB Offset	Mod	Lowest	Middle	Highest
3	1	0	QPSK	22.35	22.14	22.24
3	1	8		22.25	22.19	22.31
3	1	14		22.30	22.12	22.22
3	8	0		21.26	21.07	21.14
3	8	4		21.36	21.15	21.29
3	8	7		21.24	21.07	21.27
3	15	0		21.34	21.07	21.23
3	1	0	16-QAM	21.57	21.34	21.36
3	1	8		21.62	21.44	21.55
3	1	14		21.59	21.38	21.49
3	8	0		20.33	20.14	20.15
3	8	4		20.37	20.22	20.28
3	8	7		20.29	20.17	20.30
3	15	0		20.35	20.12	20.24
1.4	1	0	QPSK	22.32	22.21	22.28
1.4	1	3		22.35	22.20	22.22
1.4	1	5		22.35	22.15	22.36
1.4	3	0		22.30	22.07	22.31
1.4	3	1		22.35	22.14	22.29
1.4	3	3		22.30	22.08	22.23
1.4	6	0		21.24	21.03	21.17
1.4	1	0	16-QAM	21.71	21.47	21.63
1.4	1	3		21.64	21.46	21.61
1.4	1	5		21.76	21.50	21.58
1.4	3	0		21.36	21.09	21.25
1.4	3	1		21.39	21.14	21.29
1.4	3	3		21.36	21.10	21.26
1.4	6	0		20.33	20.15	20.27

LTE Band 7 Maximum Average Power [dBm]						
BW [MHz]	RB Size	RB Offset	Mod	Lowest	Middle	Highest
20	1	0	QPSK	21.68	**21.80**	21.53
20	1	49		21.67	21.79	21.59
20	1	99		21.63	21.64	21.48
20	50	0		20.69	20.90	20.54
20	50	24		20.67	20.87	20.62
20	50	50		20.75	20.84	20.58
20	100	0		20.72	20.79	20.52
20	1	0	16-QAM	20.95	21.08	20.83
20	1	49		20.96	21.16	20.90
20	1	99		20.93	20.94	20.78
20	50	0		19.74	19.85	19.55
20	50	24		19.72	19.89	19.61
20	50	50		19.76	19.87	19.59
20	100	0		19.74	19.83	19.54
15	1	0	QPSK	21.46	21.71	21.27
15	1	37		21.59	21.76	21.63
15	1	74		21.49	21.60	21.33
15	36	0		20.56	20.71	20.27
15	36	20		20.69	20.75	20.45
15	36	39		20.56	20.71	20.43
15	75	0		20.56	20.68	20.41
15	1	0	16-QAM	20.77	21.01	20.57
15	1	37		20.99	21.03	20.76
15	1	74		20.80	20.92	20.65
15	36	0		19.57	19.74	19.25
15	36	20		19.65	19.74	19.41
15	36	39		19.57	19.70	19.39
15	75	0		19.56	19.65	19.39

LTE Band 7 Maximum Average Power [dBm]						
BW [MHz]	RB Size	RB Offset	Mod	Lowest	Middle	Highest
10	1	0	QPSK	21.41	21.73	21.41
10	1	25		21.73	21.72	21.55
10	1	49		21.53	21.70	21.40
10	25	0		20.47	20.74	20.34
10	25	12		20.58	20.72	20.41
10	25	25		20.51	20.68	20.43
10	50	0		20.53	20.67	20.38
10	1	0	16-QAM	20.74	21.06	20.74
10	1	25		20.93	21.06	20.77
10	1	49		20.87	21.05	20.73
10	25	0		19.49	19.71	19.35
10	25	12		19.62	19.69	19.42
10	25	25		19.48	19.69	19.43
10	50	0		19.54	19.63	19.36
5	1	0	QPSK	21.52	21.76	21.40
5	1	12		21.51	21.76	21.47
5	1	24		21.60	21.73	21.40
5	12	0		20.52	20.64	20.34
5	12	7		20.54	20.73	20.42
5	12	13		20.55	20.70	20.35
5	25	0		20.47	20.70	20.39
5	1	0	16-QAM	20.75	21.04	20.69
5	1	12		20.87	21.07	20.83
5	1	24		20.90	21.04	20.74
5	12	0		19.54	19.72	19.44
5	12	7		19.55	19.78	19.48
5	12	13		19.58	19.76	19.44
5	25	0		19.51	19.73	19.40

LTE Band 12 Maximum Average Power [dBm]						
BW [MHz]	RB Size	RB Offset	Mod	Lowest	Middle	Highest
10	1	0	QPSK	22.97	**23.00**	22.84
10	1	25		22.96	22.98	22.99
10	1	49		22.91	22.98	22.82
10	25	0		21.93	22.00	21.77
10	25	12		21.90	21.86	21.76
10	25	25		21.77	21.76	21.75
10	50	0		21.84	21.92	21.72
10	1	0	16-QAM	22.22	22.14	22.13
10	1	25		22.28	22.17	22.15
10	1	49		22.11	22.14	22.09
10	25	0		20.89	20.81	20.79
10	25	12		20.91	20.87	20.77
10	25	25		20.83	20.75	20.72
10	50	0		20.92	20.82	20.72
5	1	0	QPSK	22.95	22.82	22.72
5	1	12		22.94	22.69	22.67
5	1	24		22.79	22.73	22.68
5	12	0		21.77	21.72	21.59
5	12	7		21.83	21.68	21.71
5	12	13		21.77	21.69	21.57
5	25	0		21.87	21.69	21.70
5	1	0	16-QAM	22.17	22.04	21.93
5	1	12		22.40	22.11	22.18
5	1	24		22.10	21.99	21.95
5	12	0		20.75	20.74	20.59
5	12	7		20.78	20.69	20.72
5	12	13		20.79	20.69	20.64
5	25	0		20.88	20.72	20.65

LTE Band 12 Maximum Average Power [dBm]						
BW [MHz]	RB Size	RB Offset	Mod	Lowest	Middle	Highest
3	1	0	QPSK	22.92	22.78	22.69
3	1	8		22.85	22.70	22.73
3	1	14		22.83	22.66	22.65
3	8	0		21.82	21.67	21.70
3	8	4		21.89	21.68	21.66
3	8	7		21.78	21.64	21.69
3	15	0		21.88	21.67	21.69
3	1	0	16-QAM	22.12	22.01	21.88
3	1	8		22.12	21.91	21.89
3	1	14		22.11	21.89	21.95
3	8	0		20.91	20.73	20.75
3	8	4		20.94	20.76	20.68
3	8	7		20.83	20.71	20.71
3	15	0		20.85	20.70	20.71
1.4	1	0	QPSK	22.88	22.80	22.77
1.4	1	3		22.86	22.80	22.78
1.4	1	5		22.83	22.80	22.74
1.4	3	0		22.65	22.68	22.62
1.4	3	1		22.69	22.75	22.73
1.4	3	3		22.62	22.69	22.65
1.4	6	0		21.60	21.64	21.62
1.4	1	0	16-QAM	22.04	22.08	22.04
1.4	1	3		22.06	22.09	22.05
1.4	1	5		22.13	22.09	22.09
1.4	3	0		21.73	21.73	21.65
1.4	3	1		21.63	21.70	21.66
1.4	3	3		21.66	21.72	21.69
1.4	6	0		20.66	20.72	20.67

LTE Band 13 Maximum Average Power [dBm]						
BW [MHz]	RB Size	RB Offset	Mod	Lowest	Middle	Highest
10	1	0	QPSK	-	22.57	-
10	1	25			22.53	
10	1	49			22.44	
10	25	0			21.45	
10	25	12			21.42	
10	25	25			21.34	
10	50	0			21.15	
10	1	0	16-QAM		21.59	
10	1	25			21.81	
10	1	49			21.74	
10	25	0			20.39	
10	25	12			20.44	
10	25	25			20.36	
10	50	0			20.44	
5	1	0	QPSK	22.17	22.45	22.55
5	1	12		22.50	22.43	22.46
5	1	24		22.51	22.34	22.51
5	12	0		21.49	21.38	21.45
5	12	7		21.49	21.46	21.54
5	12	13		21.50	21.42	21.47
5	25	0		21.51	21.36	21.49
5	1	0	16-QAM	21.46	21.67	21.79
5	1	12		21.84	21.84	21.85
5	1	24		21.74	21.63	21.83
5	12	0		20.42	20.37	20.49
5	12	7		20.49	20.41	20.59
5	12	13		20.48	20.44	20.58
5	25	0		20.53	20.43	20.45

LTE Band 26 Maximum Average Power [dBm]						
BW [MHz]	RB Size	RB Offset	Mod	Lowest	Middle	Highest
15	1	0	QPSK	22.65	**22.74**	22.39
15	1	37		22.49	22.26	22.34
15	1	74		22.35	22.37	22.34
15	36	0		21.71	21.73	21.50
15	36	20		21.69	21.51	21.46
15	36	39		21.54	21.32	21.40
15	75	0		21.55	21.58	21.52
15	1	0	16-QAM	21.81	22.04	21.59
15	1	37		21.68	22.01	21.65
15	1	74		21.71	21.66	21.61
15	36	0		20.54	20.71	20.34
15	36	20		20.51	20.66	20.47
15	36	39		20.32	20.52	20.48
15	75	0		20.46	20.73	20.55
10	1	0	QPSK	22.48	22.70	22.42
10	1	25		22.52	22.71	22.56
10	1	49		22.33	22.51	22.38
10	25	0		21.36	21.66	21.42
10	25	12		21.34	21.56	21.47
10	25	25		21.31	21.58	21.36
10	50	0		21.33	21.64	21.44
10	1	0	16-QAM	21.80	22.04	21.78
10	1	25		21.74	21.97	21.84
10	1	49		21.64	21.85	21.64
10	25	0		20.37	20.67	20.41
10	25	12		20.33	20.51	20.46
10	25	25		20.24	20.56	20.34
10	50	0		20.33	20.60	20.42

LTE Band 26 Maximum Average Power [dBm]						
BW [MHz]	RB Size	RB Offset	Mod	Lowest	Middle	Highest
5	1	0	QPSK	22.36	22.66	22.46
5	1	12		22.30	22.65	22.46
5	1	24		22.30	22.56	22.40
5	12	0		21.23	21.71	21.34
5	12	7		21.37	21.73	21.39
5	12	13		21.26	21.65	21.35
5	25	0		21.31	21.70	21.39
5	1	0	16-QAM	21.64	22.12	21.75
5	1	12		21.75	22.11	21.78
5	1	24		21.62	22.00	21.67
5	12	0		20.27	20.74	20.38
5	12	7		20.35	20.71	20.45
5	12	13		20.26	20.67	20.41
5	25	0		20.32	20.73	20.36
3	1	0	QPSK	22.38	22.70	22.41
3	1	8		22.38	22.66	22.47
3	1	14		22.33	22.67	22.38
3	8	0		21.35	21.79	21.38
3	8	4		21.37	21.79	21.46
3	8	7		21.30	21.69	21.41
3	15	0		21.32	21.73	21.40
3	1	0	16-QAM	21.62	22.02	21.68
3	1	8		21.65	21.99	21.73
3	1	14		21.55	21.98	21.67
3	8	0		20.37	20.85	20.41
3	8	4		20.40	20.85	20.47
3	8	7		20.36	20.75	20.43
3	15	0		20.34	20.77	20.40

LTE Band 26 Maximum Average Power [dBm]						
BW [MHz]	RB Size	RB Offset	Mod	Lowest	Middle	Highest
1.4	1	0	QPSK	22.28	22.53	22.30
1.4	1	3		22.27	22.52	22.30
1.4	1	5		22.20	22.50	22.24
1.4	3	0		22.13	22.50	22.24
1.4	3	1		22.20	22.42	22.29
1.4	3	3		22.16	22.52	22.24
1.4	6	0		21.13	21.51	21.18
1.4	1	0	16-QAM	21.64	21.97	21.61
1.4	1	3		21.56	21.93	21.59
1.4	1	5		21.55	21.89	21.56
1.4	3	0		21.16	21.57	21.24
1.4	3	1		21.19	21.66	21.32
1.4	3	3		21.21	21.64	21.27
1.4	6	0		20.21	20.66	20.30

LTE Band 41 Maximum Average Power [dBm]						
BW [MHz]	RB Size	RB Offset	Mod	Lowest	Middle	Highest
20	1	0	QPSK	21.38	**21.60**	21.55
20	1	49		21.44	21.55	21.32
20	1	99		21.34	21.44	21.26
20	50	0		20.47	20.68	20.41
20	50	24		20.53	20.58	20.43
20	50	50		20.47	20.46	20.37
20	100	0		20.46	20.54	20.34
20	1	0	16-QAM	20.42	20.44	20.57
20	1	49		20.59	20.59	20.48
20	1	99		20.42	20.48	20.23
20	50	0		19.46	19.50	19.46
20	50	24		19.53	19.54	19.44
20	50	50		19.49	19.44	19.42
20	100	0		19.51	19.51	19.42
15	1	0	QPSK	21.44	21.52	21.57
15	1	37		21.47	21.50	21.55
15	1	74		21.40	21.51	21.23
15	36	0		20.58	20.55	20.52
15	36	20		20.67	20.61	20.48
15	36	39		20.45	20.60	20.39
15	75	0		20.43	20.48	20.37
15	1	0	16-QAM	20.51	20.47	20.50
15	1	37		20.57	20.80	20.66
15	1	74		20.54	20.48	20.33
15	36	0		19.49	19.45	19.43
15	36	20		19.59	19.53	19.37
15	36	39		19.41	19.49	19.30
15	75	0		19.49	19.52	19.38

LTE Band 41 Maximum Average Power [dBm]						
BW [MHz]	RB Size	RB Offset	Mod	Lowest	Middle	Highest
10	1	0	QPSK	21.41	21.53	21.35
10	1	25		21.53	21.54	21.34
10	1	49		21.48	21.55	21.16
10	25	0		20.48	20.39	20.38
10	25	12		20.47	20.48	20.34
10	25	25		20.52	20.44	20.31
10	50	0		20.42	20.43	20.31
10	1	0	16-QAM	20.59	20.57	20.58
10	1	25		20.68	20.65	20.56
10	1	49		20.58	20.55	20.34
10	25	0		19.55	19.45	19.31
10	25	12		19.55	19.55	19.31
10	25	25		19.54	19.49	19.22
10	50	0		19.49	19.50	19.28
5	1	0	QPSK	21.39	21.39	21.12
5	1	12		21.46	21.41	21.12
5	1	24		21.44	21.40	21.04
5	12	0		20.50	20.50	20.24
5	12	7		20.60	20.51	20.29
5	12	13		20.56	20.44	20.22
5	25	0		20.52	20.44	20.26
5	1	0	16-QAM	20.55	20.51	20.39
5	1	12		20.74	20.50	20.40
5	1	24		20.69	20.58	20.38
5	12	0		19.48	19.53	19.27
5	12	7		19.59	19.53	19.32
5	12	13		19.55	19.47	19.27
5	25	0		19.58	19.53	19.30

Appendix B. Test Results of ERP/EIRP and Radiated Test

ERP/EIRP

LTE Band 2 / 1.4MHz (Average) (GT - LC = -0.22 dB)							
Channel	Mode	RB		Conducted		EIRP	
		Size	Offset	Power (dBm)	Power (Watts)	EIRP(dBm)	EIRP(W)
Lowest	QPSK	1	0	22.71	0.1866	22.49	0.1774
Middle		1	0	22.56	0.1803	22.34	0.1714
Highest		1	0	22.67	0.1849	22.45	0.1758
Lowest	16QAM	1	3	21.88	0.1542	21.66	0.1466
Middle		1	3	21.95	0.1567	21.73	0.1489
Highest		1	3	21.94	0.1563	21.72	0.1486
Limit	EIRP < 2W			Result		PASS	

LTE Band 2 / 3MHz (Average) (GT - LC = -0.22 dB)							
Channel	Mode	RB		Conducted		EIRP	
		Size	Offset	Power (dBm)	Power (Watts)	EIRP(dBm)	EIRP(W)
Lowest	QPSK	1	8	22.54	0.1795	22.32	0.1706
Middle		1	8	22.61	0.1824	22.39	0.1734
Highest		1	8	22.53	0.1791	22.31	0.1702
Lowest	16QAM	1	8	21.85	0.1531	21.63	0.1455
Middle		1	8	21.92	0.1556	21.70	0.1479
Highest		1	8	21.87	0.1538	21.65	0.1462
Limit	EIRP < 2W			Result		PASS	

LTE Band 2 / 5MHz (Average) (GT - LC = -0.22 dB)							
Channel	Mode	RB		Conducted		EIRP	
		Size	Offset	Power (dBm)	Power (Watts)	EIRP(dBm)	EIRP(W)
Lowest	QPSK	1	0	22.67	0.1849	22.45	0.1758
Middle		1	0	22.70	0.1862	22.48	0.1770
Highest		1	0	22.66	0.1845	22.44	0.1754
Lowest	16QAM	1	12	21.92	0.1556	21.70	0.1479
Middle		1	12	22.05	0.1603	21.83	0.1524
Highest		1	12	21.95	0.1567	21.73	0.1489
Limit	EIRP < 2W			Result		PASS	

LTE Band 2 / 10MHz (Average) (GT - LC = -0.22 dB)							
Channel	Mode	RB		Conducted		EIRP	
		Size	Offset	Power (dBm)	Power (Watts)	EIRP(dBm)	EIRP(W)
Lowest	QPSK	1	25	22.74	0.1879	22.52	0.1786
Middle		1	25	22.80	0.1905	22.58	0.1811
Highest		1	25	22.79	0.1901	22.57	0.1807
Lowest	16QAM	1	25	21.91	0.1552	21.69	0.1476
Middle		1	25	22.04	0.1600	21.82	0.1521
Highest		1	25	21.93	0.1560	21.71	0.1483
Limit	EIRP < 2W			Result		PASS	

LTE Band 2 / 15MHz (Average) (GT - LC = -0.22 dB)							
Channel	Mode	RB		Conducted		EIRP	
		Size	Offset	Power (dBm)	Power (Watts)	EIRP(dBm)	EIRP(W)
Lowest	QPSK	1	0	22.73	0.1875	22.51	0.1782
Middle		1	0	22.78	0.1897	22.56	0.1803
Highest		1	0	22.82	0.1914	22.60	0.1820
Lowest	16QAM	1	0	21.94	0.1563	21.72	0.1486
Middle		1	0	22.04	0.1600	21.82	0.1521
Highest		1	0	21.94	0.1563	21.72	0.1486
Limit	EIRP < 2W			Result		PASS	

LTE Band 2 / 20MHz (Average) (GT - LC = -0.22 dB)							
Channel	Mode	RB		Conducted		EIRP	
		Size	Offset	Power (dBm)	Power (Watts)	EIRP(dBm)	EIRP(W)
Lowest	QPSK	1	0	22.77	0.1892	22.55	0.1799
Middle		1	0	22.85	0.1928	22.63	0.1832
Highest		1	0	22.84	0.1923	22.62	0.1828
Lowest	16QAM	1	0	22.02	0.1592	21.80	0.1514
Middle		1	0	22.06	0.1607	21.84	0.1528
Highest		1	0	22.06	0.1607	21.84	0.1528
Limit	EIRP < 2W			Result		PASS	

LTE Band 25 / 1.4MHz (Average) (GT - LC = -0.22 dB)							
Channel	Mode	RB		Conducted		EIRP	
		Size	Offset	Power (dBm)	Power (Watts)	EIRP(dBm)	EIRP(W)
Lowest	QPSK	1	3	22.63	0.1832	22.41	0.1742
Middle		1	3	22.64	0.1837	22.42	0.1746
Highest		1	3	22.72	0.1871	22.50	0.1778
Lowest	16QAM	1	0	21.89	0.1545	21.67	0.1469
Middle		1	0	22.04	0.1600	21.82	0.1521
Highest		1	0	22.00	0.1585	21.78	0.1507
Limit	EIRP < 2W			Result		PASS	

LTE Band 25 / 3MHz (Average) (GT - LC = -0.22 dB)							
Channel	Mode	RB		Conducted		EIRP	
		Size	Offset	Power (dBm)	Power (Watts)	EIRP(dBm)	EIRP(W)
Lowest	QPSK	1	0	22.66	0.1845	22.44	0.1754
Middle		1	0	22.71	0.1866	22.49	0.1774
Highest		1	0	22.66	0.1845	22.44	0.1754
Lowest	16QAM	1	8	21.89	0.1545	21.67	0.1469
Middle		1	8	21.94	0.1563	21.72	0.1486
Highest		1	8	21.89	0.1545	21.67	0.1469
Limit	EIRP < 2W			Result		PASS	

LTE Band 25 / 5MHz (Average) (GT - LC = -0.22 dB)							
Channel	Mode	RB		Conducted		EIRP	
		Size	Offset	Power (dBm)	Power (Watts)	EIRP(dBm)	EIRP(W)
Lowest	QPSK	1	24	22.46	0.1762	22.24	0.1675
Middle		1	24	22.60	0.1820	22.38	0.1730
Highest		1	24	22.68	0.1854	22.46	0.1762
Lowest	16QAM	1	12	21.84	0.1528	21.62	0.1452
Middle		1	12	21.85	0.1531	21.63	0.1455
Highest		1	12	22.08	0.1614	21.86	0.1535
Limit	EIRP < 2W			Result		PASS	

LTE Band 25 / 10MHz (Average) (GT - LC = -0.22 dB)							
Channel	Mode	RB		Conducted		EIRP	
		Size	Offset	Power (dBm)	Power (Watts)	EIRP(dBm)	EIRP(W)
Lowest	QPSK	1	0	22.75	0.1884	22.53	0.1791
Middle		1	0	22.88	0.1941	22.66	0.1845
Highest		1	0	22.79	0.1901	22.57	0.1807
Lowest	16QAM	1	0	21.96	0.1570	21.74	0.1493
Middle		1	0	22.04	0.1600	21.82	0.1521
Highest		1	0	22.03	0.1596	21.81	0.1517
Limit	EIRP < 2W			Result		PASS	

LTE Band 25 / 15MHz (Average) (GT - LC = -0.22 dB)							
Channel	Mode	RB		Conducted		EIRP	
		Size	Offset	Power (dBm)	Power (Watts)	EIRP(dBm)	EIRP(W)
Lowest	QPSK	1	0	22.80	0.1905	22.58	0.1811
Middle		1	0	22.87	0.1936	22.65	0.1841
Highest		1	0	22.83	0.1919	22.61	0.1824
Lowest	16QAM	1	0	22.06	0.1607	21.84	0.1528
Middle		1	0	22.13	0.1633	21.91	0.1552
Highest		1	0	22.21	0.1663	21.99	0.1581
Limit	EIRP < 2W			Result		PASS	

LTE Band 25 / 20MHz (Average) (GT - LC = -0.22 dB)							
Channel	Mode	RB		Conducted		EIRP	
		Size	Offset	Power (dBm)	Power (Watts)	EIRP(dBm)	EIRP(W)
Lowest	QPSK	1	0	22.85	0.1928	22.63	0.1832
Middle		1	0	23.00	0.1995	22.78	0.1897
Highest		1	0	22.99	0.1991	22.77	0.1892
Lowest	16QAM	1	0	22.12	0.1629	21.90	0.1549
Middle		1	0	22.22	0.1667	22.00	0.1585
Highest		1	0	22.23	0.1671	22.01	0.1589
Limit	EIRP < 2W			Result		PASS	

LTE Band 4 / 1.4MHz (Average) (GT - LC = -1.18 dB)							
Channel	Mode	RB		Conducted		EIRP	
		Size	Offset	Power (dBm)	Power (Watts)	EIRP(dBm)	EIRP(W)
Lowest	QPSK	1	5	23.50	0.2239	22.32	0.1706
Middle		1	5	23.53	0.2254	22.35	0.1718
Highest		1	5	23.59	0.2286	22.41	0.1742
Lowest	16QAM	1	3	22.94	0.1968	21.76	0.1500
Middle		1	3	22.77	0.1892	21.59	0.1442
Highest		1	3	22.95	0.1972	21.77	0.1503
Limit	EIRP < 1W			Result		PASS	

LTE Band 4 / 3MHz (Average) (GT - LC = -1.18 dB)							
Channel	Mode	RB		Conducted		EIRP	
		Size	Offset	Power (dBm)	Power (Watts)	EIRP(dBm)	EIRP(W)
Lowest	QPSK	1	0	23.53	0.2254	22.35	0.1718
Middle		1	0	23.51	0.2244	22.33	0.1710
Highest		1	0	23.53	0.2254	22.35	0.1718
Lowest	16QAM	1	8	22.78	0.1897	21.60	0.1445
Middle		1	8	22.71	0.1866	21.53	0.1422
Highest		1	8	22.84	0.1923	21.66	0.1466
Limit	EIRP < 1W			Result		PASS	

LTE Band 4 / 5MHz (Average) (GT - LC = -1.18 dB)							
Channel	Mode	RB		Conducted		EIRP	
		Size	Offset	Power (dBm)	Power (Watts)	EIRP(dBm)	EIRP(W)
Lowest	QPSK	1	24	23.45	0.2213	22.27	0.1687
Middle		1	24	23.39	0.2183	22.21	0.1663
Highest		1	24	23.61	0.2296	22.43	0.1750
Lowest	16QAM	1	24	22.84	0.1923	21.66	0.1466
Middle		1	24	22.65	0.1841	21.47	0.1403
Highest		1	24	22.97	0.1982	21.79	0.1510
Limit	EIRP < 1W			Result		PASS	

LTE Band 4 / 10MHz (Average) (GT - LC = -1.18 dB)							
Channel	Mode	RB		Conducted		EIRP	
		Size	Offset	Power (dBm)	Power (Watts)	EIRP(dBm)	EIRP(W)
Lowest	QPSK	1	25	23.55	0.2265	22.37	0.1726
Middle		1	25	23.62	0.2301	22.44	0.1754
Highest		1	25	23.59	0.2286	22.41	0.1742
Lowest	16QAM	1	0	22.88	0.1941	21.70	0.1479
Middle		1	0	22.77	0.1892	21.59	0.1442
Highest		1	0	22.91	0.1954	21.73	0.1489
Limit	EIRP < 1W			Result		PASS	

LTE Band 4 / 15MHz (Average) (GT - LC = -1.18 dB)							
Channel	Mode	RB		Conducted		EIRP	
		Size	Offset	Power (dBm)	Power (Watts)	EIRP(dBm)	EIRP(W)
Lowest	QPSK	1	0	23.52	0.2249	22.34	0.1714
Middle		1	0	23.56	0.2270	22.38	0.1730
Highest		1	0	23.59	0.2286	22.41	0.1742
Lowest	16QAM	1	0	22.98	0.1986	21.80	0.1514
Middle		1	0	22.86	0.1932	21.68	0.1472
Highest		1	0	22.91	0.1954	21.73	0.1489
Limit	EIRP < 1W			Result		PASS	

LTE Band 4 / 20MHz (Average) (GT - LC = -1.18 dB)							
Channel	Mode	RB		Conducted		EIRP	
		Size	Offset	Power (dBm)	Power (Watts)	EIRP(dBm)	EIRP(W)
Lowest	QPSK	1	0	23.63	0.2307	22.45	0.1758
Middle		1	0	23.83	0.2415	22.65	0.1841
Highest		1	0	23.71	0.2350	22.53	0.1791
Lowest	16QAM	1	49	22.88	0.1941	21.70	0.1479
Middle		1	49	22.93	0.1963	21.75	0.1496
Highest		1	49	22.96	0.1977	21.78	0.1507
Limit	EIRP < 1W			Result		PASS	

LTE Band 5 / 1.4MHz (Average) (GT - LC = -0.35 dB)							
Channel	Mode	RB		Conducted		ERP	
		Size	Offset	Power (dBm)	Power (Watts)	ERP(dBm)	ERP(W)
Lowest	QPSK	1	5	22.35	0.1718	19.85	0.0966
Middle		1	5	22.15	0.1641	19.65	0.0923
Highest		1	5	22.36	0.1722	19.86	0.0968
Lowest	16QAM	1	5	21.76	0.1500	19.26	0.0843
Middle		1	5	21.50	0.1413	19.00	0.0794
Highest		1	5	21.58	0.1439	19.08	0.0809
Limit	ERP < 7W			Result		PASS	

LTE Band 5 / 3MHz (Average) (GT - LC = -0.35 dB)							
Channel	Mode	RB		Conducted		ERP	
		Size	Offset	Power (dBm)	Power (Watts)	ERP(dBm)	ERP(W)
Lowest	QPSK	1	0	22.35	0.1718	19.85	0.0966
Middle		1	0	22.14	0.1637	19.64	0.0920
Highest		1	0	22.24	0.1675	19.74	0.0942
Lowest	16QAM	1	8	21.62	0.1452	19.12	0.0817
Middle		1	8	21.44	0.1393	18.94	0.0783
Highest		1	8	21.55	0.1429	19.05	0.0804
Limit	ERP < 7W			Result		PASS	

LTE Band 5 / 5MHz (Average) (GT - LC = -0.35 dB)							
Channel	Mode	RB		Conducted		ERP	
		Size	Offset	Power (dBm)	Power (Watts)	ERP(dBm)	ERP(W)
Lowest	QPSK	1	0	22.36	0.1722	19.86	0.0968
Middle		1	0	22.12	0.1629	19.62	0.0916
Highest		1	0	22.13	0.1633	19.63	0.0918
Lowest	16QAM	1	12	21.73	0.1489	19.23	0.0838
Middle		1	12	21.50	0.1413	19.00	0.0794
Highest		1	12	21.50	0.1413	19.00	0.0794
Limit	ERP < 7W			Result		PASS	

LTE Band 5 / 10MHz (Average) (GT - LC = -0.35 dB)							
Channel	Mode	RB		Conducted		ERP	
		Size	Offset	Power (dBm)	Power (Watts)	ERP(dBm)	ERP(W)
Lowest	QPSK	1	0	22.20	0.1660	19.70	0.0933
Middle		1	0	22.38	0.1730	19.88	0.0973
Highest		1	0	22.24	0.1675	19.74	0.0942
Lowest	16QAM	1	0	21.54	0.1426	19.04	0.0802
Middle		1	0	21.63	0.1455	19.13	0.0818
Highest		1	0	21.58	0.1439	19.08	0.0809
Limit	ERP < 7W			Result		PASS	

LTE Band 7 / 5MHz (Average) (GT - LC = -0.88 dB)							
Channel	Mode	RB		Conducted		EIRP	
		Size	Offset	Power (dBm)	Power (Watts)	EIRP(dBm)	EIRP(W)
Lowest	QPSK	1.00	0.00	21.52	0.1419	20.64	0.1159
Middle		1.00	0.00	21.76	0.1500	20.88	0.1225
Highest		1.00	0.00	21.40	0.1380	20.52	0.1127
Lowest	16QAM	1.00	12.00	20.87	0.1222	19.99	0.0998
Middle		1.00	12.00	21.07	0.1279	20.19	0.1045
Highest		1.00	12.00	20.83	0.1211	19.95	0.0989
Limit	EIRP < 2W			Result		PASS	

LTE Band 7 / 10MHz (Average) (GT - LC = -0.88 dB)							
Channel	Mode	RB		Conducted		EIRP	
		Size	Offset	Power (dBm)	Power (Watts)	EIRP(dBm)	EIRP(W)
Lowest	QPSK	1.00	0.00	21.41	0.1384	20.53	0.1130
Middle		1.00	0.00	21.73	0.1489	20.85	0.1216
Highest		1.00	0.00	21.41	0.1384	20.53	0.1130
Lowest	16QAM	1.00	0.00	20.74	0.1186	19.86	0.0968
Middle		1.00	0.00	21.06	0.1276	20.18	0.1042
Highest		1.00	0.00	20.74	0.1186	19.86	0.0968
Limit	EIRP < 2W			Result		PASS	

LTE Band 7 / 15MHz (Average) (GT - LC = -0.88 dB)							
Channel	Mode	RB		Conducted		EIRP	
		Size	Offset	Power (dBm)	Power (Watts)	EIRP(dBm)	EIRP(W)
Lowest	QPSK	1.00	37.00	21.59	0.1442	20.71	0.1178
Middle		1.00	37.00	21.76	0.1500	20.88	0.1225
Highest		1.00	37.00	21.63	0.1455	20.75	0.1189
Lowest	16QAM	1.00	37.00	20.99	0.1256	20.11	0.1026
Middle		1.00	37.00	21.03	0.1268	20.15	0.1035
Highest		1.00	37.00	20.76	0.1191	19.88	0.0973
Limit	EIRP < 2W			Result		PASS	

LTE Band 7 / 20MHz (Average) (GT - LC = -0.88 dB)							
Channel	Mode	RB		Conducted		EIRP	
		Size	Offset	Power (dBm)	Power (Watts)	EIRP(dBm)	EIRP(W)
Lowest	QPSK	1.00	0.00	21.68	0.1472	20.80	0.1202
Middle		1.00	0.00	21.80	0.1514	20.92	0.1236
Highest		1.00	0.00	21.53	0.1422	20.65	0.1161
Lowest	16QAM	1.00	49.00	20.96	0.1247	20.08	0.1019
Middle		1.00	49.00	21.16	0.1306	20.28	0.1067
Highest		1.00	49.00	20.90	0.1230	20.02	0.1005
Limit	EIRP < 2W			Result		PASS	

LTE Band 12 / 1.4MHz (Average) (GT - LC = 1.64 dB)							
Channel	Mode	RB		Conducted		ERP	
		Size	Offset	Power (dBm)	Power (Watts)	ERP(dBm)	ERP(W)
Lowest	QPSK	1	0	22.88	0.1941	22.37	0.1726
Middle		1	0	22.80	0.1905	22.29	0.1694
Highest		1	0	22.77	0.1892	22.26	0.1683
Lowest	16QAM	1	5	22.13	0.1633	21.62	0.1452
Middle		1	5	22.09	0.1618	21.58	0.1439
Highest		1	5	22.09	0.1618	21.58	0.1439
Limit	ERP < 3W			Result		PASS	

LTE Band 12 / 3MHz (Average) (GT - LC = 1.64 dB)							
Channel	Mode	RB		Conducted		ERP	
		Size	Offset	Power (dBm)	Power (Watts)	ERP(dBm)	ERP(W)
Lowest	QPSK	1	0	22.92	0.1959	22.41	0.1742
Middle		1	0	22.78	0.1897	22.27	0.1687
Highest		1	0	22.69	0.1858	22.18	0.1652
Lowest	16QAM	1	0	22.12	0.1629	21.61	0.1449
Middle		1	0	22.01	0.1589	21.50	0.1413
Highest		1	0	21.88	0.1542	21.37	0.1371
Limit	ERP < 3W			Result		PASS	

LTE Band 12 / 5MHz (Average) (GT - LC = 1.64 dB)							
Channel	Mode	RB		Conducted		ERP	
		Size	Offset	Power (dBm)	Power (Watts)	ERP(dBm)	ERP(W)
Lowest	QPSK	1	0	22.95	0.1972	22.44	0.1754
Middle		1	0	22.82	0.1914	22.31	0.1702
Highest		1	0	22.72	0.1871	22.21	0.1663
Lowest	16QAM	1	12	22.40	0.1738	21.89	0.1545
Middle		1	12	22.11	0.1626	21.60	0.1445
Highest		1	12	22.18	0.1652	21.67	0.1469
Limit	ERP < 3W			Result		PASS	

LTE Band 12 / 10MHz (Average) (GT - LC = 1.64 dB)							
Channel	Mode	RB		Conducted		ERP	
		Size	Offset	Power (dBm)	Power (Watts)	ERP(dBm)	ERP(W)
Lowest	QPSK	1	0	22.97	0.1982	22.46	0.1762
Middle		1	0	23.00	0.1995	22.49	0.1774
Highest		1	0	22.84	0.1923	22.33	0.1710
Lowest	16QAM	1	25	22.28	0.1690	21.77	0.1503
Middle		1	25	22.17	0.1648	21.66	0.1466
Highest		1	25	22.15	0.1641	21.64	0.1459
Limit	ERP < 3W			Result		PASS	

LTE Band 13 / 5MHz (Average) (GT - LC = 2.35 dB)							
Channel	Mode	RB		Conducted		ERP	
		Size	Offset	Power (dBm)	Power (Watts)	ERP(dBm)	ERP(W)
Lowest	QPSK	1	0	22.17	0.1648	22.37	0.1726
Middle		1	0	22.45	0.1758	22.65	0.1841
Highest		1	0	22.55	0.1799	22.75	0.1884
Lowest	16QAM	1	12	21.84	0.1528	22.04	0.1600
Middle		1	12	21.84	0.1528	22.04	0.1600
Highest		1	12	21.85	0.1531	22.05	0.1603
Limit	ERP < 3W			Result		PASS	

LTE Band 13 / 10MHz (Average) (GT - LC = 2.35 dB)							
Channel	Mode	RB		Conducted		ERP	
		Size	Offset	Power (dBm)	Power (Watts)	ERP(dBm)	ERP(W)
Lowest	QPSK	-	-	-	-	-	-
Middle		1	0	22.57	0.1807	22.77	0.1892
Highest		-	-	-	-	-	-
Lowest	16QAM	-	-	-	-	-	-
Middle		1	25	21.81	0.1517	22.01	0.1589
Highest		-	-	-	-	-	-
Limit	ERP < 3W			Result		PASS	

LTE Band 41 / 5MHz (Average) (GT - LC = 0.99 dB)							
Channel	Mode	RB		Conducted		EIRP	
		Size	Offset	Power (dBm)	Power (Watts)	EIRP(dBm)	EIRP(W)
Lowest	QPSK	1.00	12.00	21.46	0.1400	22.45	0.1758
Middle		1.00	12.00	21.41	0.1384	22.40	0.1738
Highest		1.00	12.00	21.12	0.1294	22.11	0.1626
Lowest	16QAM	1.00	12.00	20.74	0.1186	21.73	0.1489
Middle		1.00	12.00	20.50	0.1122	21.49	0.1409
Highest		1.00	12.00	20.40	0.1096	21.39	0.1377
Limit	EIRP < 2W			Result		PASS	

LTE Band 41 / 10MHz (Average) (GT - LC = 0.99 dB)							
Channel	Mode	RB		Conducted		EIRP	
		Size	Offset	Power (dBm)	Power (Watts)	EIRP(dBm)	EIRP(W)
Lowest	QPSK	1.00	49	21.48	0.1406	22.47	0.1766
Middle		1.00	49	21.55	0.1429	22.54	0.1795
Highest		1.00	49	21.16	0.1306	22.15	0.1641
Lowest	16QAM	1.00	25	20.68	0.1169	21.67	0.1469
Middle		1.00	25	20.65	0.1161	21.64	0.1459
Highest		1.00	25	20.56	0.1138	21.55	0.1429
Limit	EIRP < 2W			Result		PASS	

LTE Band 41 / 15MHz (Average) (GT - LC = 0.99 dB)							
Channel	Mode	RB		Conducted		EIRP	
		Size	Offset	Power (dBm)	Power (Watts)	EIRP(dBm)	EIRP(W)
Lowest	QPSK	1.00	0.00	21.44	0.1393	22.43	0.1750
Middle		1.00	0.00	21.52	0.1419	22.51	0.1782
Highest		1.00	0.00	21.57	0.1435	22.56	0.1803
Lowest	16QAM	1.00	37.00	20.57	0.1140	21.56	0.1432
Middle		1.00	37.00	20.80	0.1202	21.79	0.1510
Highest		1.00	37.00	20.66	0.1164	21.65	0.1462
Limit	EIRP < 2W			Result		PASS	

LTE Band 41 / 20MHz (Average) (GT - LC = 0.99 dB)							
Channel	Mode	RB		Conducted		EIRP	
		Size	Offset	Power (dBm)	Power (Watts)	EIRP(dBm)	EIRP(W)
Lowest	QPSK	1.00	0.00	21.38	0.1374	22.37	0.1726
Middle		1.00	0.00	21.60	0.1445	22.59	0.1816
Highest		1.00	0.00	21.55	0.1429	22.54	0.1795
Lowest	16QAM	1.00	49.00	20.59	0.1146	21.58	0.1439
Middle		1.00	49.00	20.59	0.1146	21.58	0.1439
Highest		1.00	49.00	20.48	0.1117	21.47	0.1403
Limit	EIRP < 2W			Result		PASS	

LTE Band 26 / 1.4MHz (Average) (GT - LC = 1.54 dB)							
Channel	Mode	RB		Conducted		ERP	
		Size	Offset	Power (dBm)	Power (Watts)	ERP(dBm)	ERP(W)
Lowest	QPSK	1	0	22.28	0.1689	21.67	0.1468
Middle		1	0	22.53	0.1789	21.92	0.1555
Highest		1	0	22.30	0.1697	21.69	0.1474
Lowest	16QAM	1	0	21.64	0.1457	21.03	0.1266
Middle		1	0	21.97	0.1573	21.36	0.1366
Highest		1	0	21.61	0.1447	21.00	0.1258
Limit	ERP < 7W			Result		PASS	

LTE Band 26 / 3MHz (Average) (GT - LC = 1.54 dB)							
Channel	Mode	RB		Conducted		ERP	
		Size	Offset	Power (dBm)	Power (Watts)	ERP(dBm)	ERP(W)
Lowest	QPSK	1	0	22.38	0.1728	21.77	0.1502
Middle		1	0	22.70	0.1860	22.09	0.1617
Highest		1	0	22.41	0.1740	21.80	0.1512
Lowest	16QAM	1	0	21.62	0.1451	21.01	0.1261
Middle		1	0	22.02	0.1591	21.41	0.1382
Highest		1	0	21.68	0.1471	21.07	0.1278
Limit	ERP < 7W			Result		PASS	

LTE Band 26 / 5MHz (Average) (GT - LC = 1.54 dB)							
Channel	Mode	RB		Conducted		ERP	
		Size	Offset	Power (dBm)	Power (Watts)	ERP(dBm)	ERP(W)
Lowest	QPSK	1	0	22.36	0.1720	21.75	0.1495
Middle		1	0	22.66	0.1843	22.05	0.1602
Highest		1	0	22.46	0.1760	21.85	0.1530
Lowest	16QAM	1	0	21.64	0.1457	21.03	0.1266
Middle		1	0	22.12	0.1628	21.51	0.1414
Highest		1	0	21.75	0.1495	21.14	0.1299
Limit	ERP < 7W			Result		PASS	

LTE Band 26 / 10MHz (Average) (GT - LC = 1.54 dB)							
Channel	Mode	RB		Conducted		ERP	
		Size	Offset	Power (dBm)	Power (Watts)	ERP(dBm)	ERP(W)
Lowest	QPSK	1	25	22.52	0.1785	21.91	0.1551
Middle		1	25	22.71	0.1865	22.10	0.1620
Highest		1	25	22.56	0.1801	21.95	0.1565
Lowest	16QAM	1	0	21.80	0.1512	21.19	0.1314
Middle		1	0	22.04	0.1598	21.43	0.1389
Highest		1	0	21.78	0.1505	21.17	0.1308
Limit	ERP < 7W			Result		PASS	

LTE Band 26 / 15MHz (Average) (GT - LC = 1.54 dB)							
Channel	Mode	RB		Conducted		ERP	
		Size	Offset	Power (dBm)	Power (Watts)	ERP(dBm)	ERP(W)
Lowest	QPSK	1	0	22.65	0.1839	22.04	0.1598
Middle		1	0	22.74	0.1878	22.13	0.1632
Highest		1	0	22.39	0.1732	21.78	0.1505
Lowest	16QAM	1	0	21.81	0.1516	21.20	0.1317
Middle		1	0	22.04	0.1598	21.43	0.1389
Highest		1	0	21.59	0.1441	20.98	0.1252
Limit	ERP < 7W			Result		PASS	

Radiated Spurious Emission

LTE Band 2

LTE Band 2 / 1.4MHz / 16QAM									
Channel	Frequency (MHz)	EIRP (dBm)	Limit (dBm)	Over Limit (dB)	SPA Reading (dBm)	S.G. Power (dBm)	TX Cable loss (dB)	TX Antenna Gain (dBi)	Polarization (H/V)
Lowest	3702	-53.28	-13	-40.28	-70.12	-59.85	1.67	8.24	H
	5550	-55.31	-13	-42.31	-77.97	-62.38	2.65	9.72	H
	7400	-50.24	-13	-37.24	-77.28	-59.38	2.46	11.60	H
									H
									H
									H
	3702	-50.32	-13	-37.32	-67.32	-56.89	1.67	8.24	V
	5550	-55.32	-13	-42.32	-77.81	-62.39	2.65	9.72	V
	7400	-50.39	-13	-37.39	-77.46	-59.53	2.46	11.60	V
									V
									V
									V
Middle	3762	-50.42	-13	-37.42	-67.42	-57.05	1.69	8.31	H
	5638	-54.40	-13	-41.40	-77.2	-61.45	2.70	9.76	H
	7517	-50.08	-13	-37.08	-77.35	-59.47	2.42	11.81	H
									H
									H
									H
	3762	-49.27	-13	-36.27	-66.4	-55.9	1.69	8.31	V
	5638	-54.60	-13	-41.60	-77.24	-61.65	2.70	9.76	V
	7517	-50.09	-13	-37.09	-77.48	-59.48	2.42	11.81	V
									V
									V
									V
Highest	3816	-46.01	-13	-33.01	-63.21	-52.69	1.70	8.38	H
	5726	-54.41	-13	-41.41	-77.35	-61.45	2.76	9.79	H
	7634	-49.60	-13	-36.60	-77	-59.09	2.39	11.88	H
									H
									H
									H
	3816	-45.39	-13	-32.39	-62.68	-52.07	1.70	8.38	V
	5726	-54.55	-13	-41.55	-77.35	-61.59	2.76	9.79	V
	7634	-49.70	-13	-36.70	-77.18	-59.19	2.39	11.88	V
									V
									V
									V

Remark: Spurious emissions within 30-1000MHz were found more than 20dB below limit line.

LTE Band 2 / 3MHz / 16QAM									
Channel	Frequency (MHz)	EIRP (dBm)	Limit (dBm)	Over Limit (dB)	SPA Reading (dBm)	S.G. Power (dBm)	TX Cable loss (dB)	TX Antenna Gain (dBi)	Polarization (H/V)
Lowest	3702	-53.90	-13	-40.90	-70.74	-60.47	1.67	8.24	H
	5550	-55.36	-13	-42.36	-78.02	-62.43	2.65	9.72	H
	7400	-50.42	-13	-37.42	-77.46	-59.56	2.46	11.60	H
									H
									H
									H
									H
	3702	-50.43	-13	-37.43	-67.43	-57	1.67	8.24	V
	5550	-55.37	-13	-42.37	-77.86	-62.44	2.65	9.72	V
	7400	-50.29	-13	-37.29	-77.36	-59.43	2.46	11.60	V
									V
									V
									V
									V
Middle	3756	-46.76	-13	-33.76	-63.76	-53.38	1.68	8.31	H
	5636	-54.71	-13	-41.71	-77.51	-61.76	2.70	9.75	H
	7514	-49.90	-13	-36.90	-77.17	-59.28	2.42	11.81	H
									H
									H
									H
									H
	3756	-49.40	-13	-36.40	-66.53	-56.02	1.68	8.31	V
	5634	-54.59	-13	-41.59	-77.23	-61.64	2.70	9.75	V
	7514	-49.61	-13	-36.61	-77	-58.99	2.42	11.81	V
									V
									V
									V
									V
Highest	3814	-47.07	-13	-34.07	-64.27	-53.74	1.70	8.38	H
	5721	-54.29	-13	-41.29	-77.23	-61.33	2.75	9.79	H
	7628	-49.71	-13	-36.71	-77.11	-59.2	2.39	11.88	H
									H
									H
									H
									H
	3814	-44.76	-13	-31.76	-62.05	-51.43	1.70	8.38	V
	5721	-54.53	-13	-41.53	-77.33	-61.57	2.75	9.79	V
	7628	-49.31	-13	-36.31	-76.79	-58.8	2.39	11.88	V
									V
									V
									V
									V

Remark: Spurious emissions within 30-1000MHz were found more than 20dB below limit line.

LTE Band 2 / 5MHz / 16QAM									
Channel	Frequency (MHz)	EIRP (dBm)	Limit (dBm)	Over Limit (dB)	SPA Reading (dBm)	S.G. Power (dBm)	TX Cable loss (dB)	TX Antenna Gain (dBi)	Polarization (H/V)
Lowest	3702	-54.57	-13	-41.57	-71.41	-61.14	1.67	8.24	H
	5550	-55.10	-13	-42.10	-77.76	-62.17	2.65	9.72	H
	7400	-50.25	-13	-37.25	-77.29	-59.39	2.46	11.60	H
									H
									H
									H
									H
	3702	-45.60	-13	-32.60	-62.6	-52.17	1.67	8.24	V
	5550	-55.54	-13	-42.54	-78.03	-62.61	2.65	9.72	V
	7400	-50.42	-13	-37.42	-77.49	-59.56	2.46	11.60	V
									V
									V
									V
									V
Middle	3756	-50.63	-13	-37.63	-67.63	-57.25	1.68	8.31	H
	5633	-54.26	-13	-41.26	-77.06	-61.31	2.70	9.75	H
	7510	-49.96	-13	-36.96	-77.23	-59.34	2.43	11.81	H
									H
									H
									H
									H
	3756	-49.22	-13	-36.22	-66.35	-55.84	1.68	8.31	V
	5633	-54.62	-13	-41.62	-77.26	-61.67	2.70	9.75	V
	7510	-49.75	-13	-36.75	-77.14	-59.13	2.43	11.81	V
									V
									V
									V
									V
Highest	3810	-46.58	-13	-33.58	-63.73	-53.25	1.70	8.37	H
	5715	-54.54	-13	-41.54	-77.44	-61.58	2.75	9.79	H
	7620	-49.72	-13	-36.72	-77.09	-59.2	2.39	11.87	H
									H
									H
									H
									H
	3810	-43.71	-13	-30.71	-60.96	-50.38	1.70	8.37	V
	5715	-54.75	-13	-41.75	-77.52	-61.79	2.75	9.79	V
	7620	-49.57	-13	-36.57	-77.03	-59.05	2.39	11.87	V
									V
									V
									V
									V

Remark: Spurious emissions within 30-1000MHz were found more than 20dB below limit line.

LTE Band 2 / 10MHz / 16QAM									
Channel	Frequency (MHz)	EIRP (dBm)	Limit (dBm)	Over Limit (dB)	SPA Reading (dBm)	S.G. Power (dBm)	TX Cable loss (dB)	TX Antenna Gain (dBi)	Polarization (H/V)
Lowest	3702	-54.00	-13	-41.00	-70.84	-60.57	1.67	8.24	H
	5550	-55.28	-13	-42.28	-77.94	-62.35	2.65	9.72	H
	7400	-50.76	-13	-37.76	-77.8	-59.9	2.46	11.60	H
									H
									H
									H
									H
	3702	-52.05	-13	-39.05	-69.05	-58.62	1.67	8.24	V
	5550	-55.47	-13	-42.47	-77.96	-62.54	2.65	9.72	V
	7400	-50.80	-13	-37.80	-77.87	-59.94	2.46	11.60	V
									V
									V
									V
									V
Middle	3750	-51.32	-13	-38.32	-68.32	-57.94	1.68	8.30	H
	5628	-50.40	-13	-37.40	-73.17	-57.45	2.70	9.75	H
	7500	-50.03	-13	-37.03	-77.28	-59.4	2.43	11.80	H
									H
									H
									H
									H
	3760	-51.30	-13	-38.30	-68.43	-57.93	1.69	8.31	V
	5628	-54.72	-13	-41.72	-77.34	-61.77	2.70	9.75	V
	7520	-49.87	-13	-36.87	-77.24	-59.26	2.42	11.81	V
									V
									V
									V
									V
Highest	3804	-46.22	-13	-33.22	-63.37	-52.89	1.70	8.36	H
	5700	-54.81	-13	-41.81	-77.69	-61.85	2.74	9.78	H
	7600	-50.40	-13	-37.40	-77.76	-59.86	2.40	11.86	H
									H
									H
									H
									H
	3804	-46.21	-13	-33.21	-63.46	-52.88	1.70	8.36	V
	5700	-54.73	-13	-41.73	-77.47	-61.77	2.74	9.78	V
	7600	-50.06	-13	-37.06	-77.51	-59.52	2.40	11.86	V
									V
									V
									V
									V

Remark: Spurious emissions within 30-1000MHz were found more than 20dB below limit line.

LTE Band 2 / 15MHz / 16QAM									
Channel	Frequency (MHz)	EIRP (dBm)	Limit (dBm)	Over Limit (dB)	SPA Reading (dBm)	S.G. Power (dBm)	TX Cable loss (dB)	TX Antenna Gain (dBi)	Polarization (H/V)
Lowest	3702	-45.44	-13	-32.44	-62.28	-52.01	1.67	8.24	H
	5550	-55.43	-13	-42.43	-78.09	-62.5	2.65	9.72	H
	7400	-50.55	-13	-37.55	-77.59	-59.69	2.46	11.60	H
									H
									H
									H
									H
	3702	-50.32	-13	-37.32	-67.32	-56.89	1.67	8.24	V
	5550	-55.48	-13	-42.48	-77.97	-62.55	2.65	9.72	V
	7400	-50.38	-13	-37.38	-77.45	-59.52	2.46	11.60	V
									V
									V
									V
									V
Middle	3750	-51.68	-13	-38.68	-68.68	-58.3	1.68	8.30	H
	5618	-54.74	-13	-41.74	-77.51	-61.79	2.69	9.75	H
	7490	-50.06	-13	-37.06	-77.31	-59.41	2.43	11.78	H
									H
									H
									H
									H
	3750	-49.53	-13	-36.53	-66.66	-56.15	1.68	8.30	V
	5618	-55.04	-13	-42.04	-77.66	-62.09	2.69	9.75	V
	7490	-49.83	-13	-36.83	-77.2	-59.18	2.43	11.78	V
									V
									V
									V
									V
Highest	3792	-45.84	-13	-32.84	-62.94	-52.49	1.70	8.35	H
	5685	-54.61	-13	-41.61	-77.49	-61.65	2.73	9.77	H
	7580	-49.57	-13	-36.57	-76.91	-59.01	2.40	11.85	H
									H
									H
									H
									H
	3792	-46.33	-13	-33.33	-63.53	-52.98	1.70	8.35	V
	5685	-54.31	-13	-41.31	-77.05	-61.35	2.73	9.77	V
	7580	-49.53	-13	-36.53	-76.97	-58.97	2.40	11.85	V
									V
									V
									V
									V

Remark: Spurious emissions within 30-1000MHz were found more than 20dB below limit line.

LTE Band 2 / 20MHz / 16QAM									
Channel	Frequency (MHz)	EIRP (dBm)	Limit (dBm)	Over Limit (dB)	SPA Reading (dBm)	S.G. Power (dBm)	TX Cable loss (dB)	TX Antenna Gain (dBi)	Polarization (H/V)
Lowest	3702	-53.70	-13	-40.70	-70.54	-60.27	1.67	8.24	H
	5550	-55.30	-13	-42.30	-77.96	-62.37	2.65	9.72	H
	7400	-50.23	-13	-37.23	-77.27	-59.37	2.46	11.60	H
									H
									H
									H
									H
	3702	-51.16	-13	-38.16	-68.16	-57.73	1.67	8.24	V
	5550	-55.45	-13	-42.45	-77.94	-62.52	2.65	9.72	V
	7400	-50.14	-13	-37.14	-77.21	-59.28	2.46	11.60	V
									V
									V
									V
									V
Middle	3744	-52.05	-13	-39.05	-69.01	-58.66	1.68	8.29	H
	5610	-54.62	-13	-41.62	-77.36	-61.68	2.69	9.74	H
	7480	-50.16	-13	-37.16	-77.37	-59.48	2.44	11.76	H
									H
									H
									H
									H
	3744	-49.32	-13	-36.32	-66.41	-55.93	1.68	8.29	V
	5610	-54.86	-13	-41.86	-77.44	-61.92	2.69	9.74	V
	7480	-49.99	-13	-36.99	-77.31	-59.31	2.44	11.76	V
									V
									V
									V
									V
Highest	3780	-47.09	-13	-34.09	-64.19	-53.73	1.69	8.34	H
	5670	-54.64	-13	-41.64	-77.49	-61.69	2.72	9.77	H
	7560	-49.72	-13	-36.72	-77.04	-59.15	2.41	11.84	H
									H
									H
									H
									H
	3780	-45.60	-13	-32.60	-62.8	-52.24	1.69	8.34	V
	5670	-54.84	-13	-41.84	-77.55	-61.89	2.72	9.77	V
	7560	-49.70	-13	-36.70	-77.12	-59.13	2.41	11.84	V
									V
									V
									V
									V

Remark: Spurious emissions within 30-1000MHz were found more than 20dB below limit line.

LTE Band 25

LTE Band 25 / 1.4MHz / 16QAM									
Channel	Frequency (MHz)	EIRP (dBm)	Limit (dBm)	Over Limit (dB)	SPA Reading (dBm)	S.G. Power (dBm)	TX Cable loss (dB)	TX Antenna Gain (dBi)	Polarization (H/V)
Lowest	3702	-47.94	-13	-34.94	-64.78	-54.51	1.67	8.24	H
	5550	-55.61	-13	-42.61	-78.27	-62.68	2.65	9.72	H
	7400	-50.76	-13	-37.76	-77.8	-59.9	2.46	11.60	H
									H
									H
									H
									H
	3702	-50.33	-13	-37.33	-67.33	-56.9	1.67	8.24	V
	5550	-55.56	-13	-42.56	-78.05	-62.63	2.65	9.72	V
	7400	-50.84	-13	-37.84	-77.91	-59.98	2.46	11.60	V
									V
									V
									V
									V
Middle	3762	-47.00	-13	-34.00	-64	-53.63	1.69	8.31	H
	5637	-54.67	-13	-41.67	-77.47	-61.72	2.70	9.75	H
	7512	-50.21	-13	-37.21	-77.48	-59.59	2.43	11.81	H
									H
									H
									H
									H
	3762	-47.71	-13	-34.71	-64.84	-54.34	1.69	8.31	V
	5637	-54.98	-13	-41.98	-77.62	-62.03	2.70	9.75	V
	7512	-49.87	-13	-36.87	-77.26	-59.25	2.43	11.81	V
									V
									V
									V
Highest	3828	-44.31	-13	-31.31	-61.52	-51	1.71	8.39	H
	5742	-54.82	-13	-41.82	-77.81	-61.85	2.76	9.80	H
	7656	-50.07	-13	-37.07	-77.61	-59.58	2.38	11.89	H
									H
									H
									H
									H
	3828	-44.18	-13	-31.18	-61.4	-50.87	1.71	8.39	V
	5742	-54.42	-13	-41.42	-77.28	-61.45	2.76	9.80	V
	7656	-50.15	-13	-37.15	-77.62	-59.66	2.38	11.89	V
									V
									V
									V

Remark: Spurious emissions within 30-1000MHz were found more than 20dB below limit line.

LTE Band 25 / 3MHz / 16QAM									
Channel	Frequency (MHz)	EIRP (dBm)	Limit (dBm)	Over Limit (dB)	SPA Reading (dBm)	S.G. Power (dBm)	TX Cable loss (dB)	TX Antenna Gain (dBi)	Polarization (H/V)
Lowest	3702	-46.99	-13	-33.99	-63.83	-53.56	1.67	8.24	H
	5550	-55.57	-13	-42.57	-78.23	-62.64	2.65	9.72	H
	7400	-50.78	-13	-37.78	-77.82	-59.92	2.46	11.60	H
									H
									H
									H
									H
	3702	-49.88	-13	-36.88	-66.88	-56.45	1.67	8.24	V
	5550	-55.78	-13	-42.78	-78.27	-62.85	2.65	9.72	V
	7400	-50.85	-13	-37.85	-77.92	-59.99	2.46	11.60	V
									V
									V
									V
									V
Middle	3756	-46.34	-13	-33.34	-63.34	-52.96	1.68	8.31	H
	5636	-54.98	-13	-41.98	-77.78	-62.03	2.70	9.75	H
	7514	-50.11	-13	-37.11	-77.38	-59.49	2.42	11.81	H
									H
									H
									H
									H
	3756	-47.20	-13	-34.20	-64.33	-53.82	1.68	8.31	V
	5636	-54.90	-13	-41.90	-77.54	-61.95	2.70	9.75	V
	7514	-50.21	-13	-37.21	-77.6	-59.59	2.42	11.81	V
									V
									V
									V
									V
Highest	3822	-43.33	-13	-30.33	-60.52	-50.01	1.71	8.39	H
	5736	-54.33	-13	-41.33	-77.26	-61.36	2.76	9.79	H
	7650	-50.38	-13	-37.38	-77.76	-59.89	2.38	11.89	H
									H
									H
									H
									H
	3822	-44.37	-13	-31.37	-61.69	-51.05	1.71	8.39	V
	5736	-54.70	-13	-41.70	-77.56	-61.73	2.76	9.79	V
	7650	-50.30	-13	-37.30	-77.77	-59.81	2.38	11.89	V
									V
									V
									V
									V

Remark: Spurious emissions within 30-1000MHz were found more than 20dB below limit line.

LTE Band 25 / 5MHz / 16QAM									
Channel	Frequency (MHz)	EIRP (dBm)	Limit (dBm)	Over Limit (dB)	SPA Reading (dBm)	S.G. Power (dBm)	TX Cable loss (dB)	TX Antenna Gain (dBi)	Polarization (H/V)
Lowest	3702	-46.36	-13	-33.36	-63.2	-52.93	1.67	8.24	H
	5550	-55.59	-13	-42.59	-78.25	-62.66	2.65	9.72	H
	7400	-50.98	-13	-37.98	-78.02	-60.12	2.46	11.60	H
									H
									H
									H
									H
	3702	-50.35	-13	-37.35	-67.35	-56.92	1.67	8.24	V
	5550	-55.61	-13	-42.61	-78.1	-62.68	2.65	9.72	V
	7400	-50.78	-13	-37.78	-77.85	-59.92	2.46	11.60	V
									V
									V
									V
									V
Middle	3756	-46.36	-13	-33.36	-63.36	-52.98	1.68	8.31	H
	5633	-54.82	-13	-41.82	-77.62	-61.87	2.70	9.75	H
	7510	-50.15	-13	-37.15	-77.42	-59.53	2.43	11.81	H
									H
									H
									H
									H
	3756	-48.13	-13	-35.13	-65.26	-54.75	1.68	8.31	V
	5633	-54.96	-13	-41.96	-77.6	-62.01	2.70	9.75	V
	7510	-49.91	-13	-36.91	-77.3	-59.29	2.43	11.81	V
									V
									V
									V
									V
Highest	3822	-43.60	-13	-30.60	-60.76	-50.28	1.71	8.39	H
	5730	-53.70	-13	-40.70	-76.64	-60.73	2.76	9.79	H
	7638	-49.38	-13	-36.38	-76.77	-58.88	2.38	11.88	H
									H
									H
									H
									H
	3822	-42.86	-13	-29.86	-60.14	-49.54	1.71	8.39	V
	5730	-54.45	-13	-41.45	-77.23	-61.48	2.76	9.79	V
	7638	-49.28	-13	-36.28	-76.76	-58.78	2.38	11.88	V
									V
									V
									V
									V

Remark: Spurious emissions within 30-1000MHz were found more than 20dB below limit line.

LTE Band 25 / 10MHz / 16QAM									
Channel	Frequency (MHz)	EIRP (dBm)	Limit (dBm)	Over Limit (dB)	SPA Reading (dBm)	S.G. Power (dBm)	TX Cable loss (dB)	TX Antenna Gain (dBi)	Polarization (H/V)
Lowest	3700	-48.63	-13	-35.63	-65.47	-55.2	1.67	8.24	H
	5550	-55.26	-13	-42.26	-77.92	-62.33	2.65	9.72	H
	7400	-50.57	-13	-37.57	-77.51	-59.71	2.46	11.60	H
									H
									H
									H
									H
	3700	-47.75	-13	-34.75	-64.75	-54.32	1.67	8.24	V
	5550	-55.45	-13	-42.45	-77.94	-62.52	2.65	9.72	V
	7400	-50.49	-13	-37.49	-77.56	-59.63	2.46	11.60	V
									V
									V
									V
									V
Middle	3750	-49.77	-13	-36.77	-66.77	-56.39	1.68	8.30	H
	5625	-54.40	-13	-41.40	-77.17	-61.45	2.70	9.75	H
	7500	-49.94	-13	-36.94	-77.19	-59.31	2.43	11.80	H
									H
									H
									H
									H
	3750	-49.57	-13	-36.57	-66.7	-56.19	1.68	8.30	V
	5625	-54.58	-13	-41.58	-77.2	-61.63	2.70	9.75	V
	7500	-49.95	-13	-36.95	-77.32	-59.32	2.43	11.80	V
									V
									V
									V
									V
Highest	3810	-44.97	-13	-31.97	-62.12	-51.64	1.70	8.37	H
	5715	-54.63	-13	-41.63	-77.57	-61.67	2.75	9.79	H
	7620	-49.72	-13	-36.72	-77.09	-59.2	2.39	11.87	H
									H
									H
									H
									H
	3810	-43.44	-13	-30.44	-60.69	-50.11	1.70	8.37	V
	5715	-54.89	-13	-41.89	-77.66	-61.93	2.75	9.79	V
	7620	-49.86	-13	-36.86	-77.32	-59.34	2.39	11.87	V
									V
									V
									V
									V

Remark: Spurious emissions within 30-1000MHz were found more than 20dB below limit line.

LTE Band 25 / 15MHz / 16QAM									
Channel	Frequency (MHz)	EIRP (dBm)	Limit (dBm)	Over Limit (dB)	SPA Reading (dBm)	S.G. Power (dBm)	TX Cable loss (dB)	TX Antenna Gain (dBi)	Polarization (H/V)
Lowest	3702	-45.85	-13	-32.85	-62.69	-52.42	1.67	8.24	H
	5556	-55.14	-13	-42.14	-77.79	-62.21	2.66	9.72	H
	7404	-50.57	-13	-37.57	-77.65	-59.72	2.46	11.61	H
									H
									H
									H
									H
	3702	-49.14	-13	-36.14	-66.14	-55.71	1.67	8.24	V
	5556	-55.18	-13	-42.18	-77.66	-62.25	2.66	9.72	V
	7404	-50.26	-13	-37.26	-77.39	-59.41	2.46	11.61	V
									V
									V
									V
									V
Middle	3750	-49.26	-13	-36.26	-66.26	-55.88	1.68	8.30	H
	5628	-54.26	-13	-41.26	-77.03	-61.31	2.70	9.75	H
	7500	-49.86	-13	-36.86	-77.11	-59.23	2.43	11.80	H
									H
									H
									H
									H
	3750	-47.95	-13	-34.95	-65.08	-54.57	1.68	8.30	V
	5628	-54.44	-13	-41.44	-77.06	-61.49	2.70	9.75	V
	7500	-49.49	-13	-36.49	-76.86	-58.86	2.43	11.80	V
									V
									V
									V
									V
Highest	3804	-42.76	-13	-29.76	-59.91	-49.43	1.70	8.36	H
	5706	-54.31	-13	-41.31	-77.21	-61.35	2.74	9.78	H
	7608	-50.34	-13	-37.34	-77.72	-59.81	2.39	11.86	H
									H
									H
									H
									H
	3804	-44.75	-13	-31.75	-62	-51.42	1.70	8.36	V
	5706	-54.90	-13	-41.90	-77.67	-61.94	2.74	9.78	V
	7608	-50.26	-13	-37.26	-77.73	-59.73	2.39	11.86	V
									V
									V
									V
									V

Remark: Spurious emissions within 30-1000MHz were found more than 20dB below limit line.

LTE Band 25 / 20MHz / 16QAM									
Channel	Frequency (MHz)	EIRP (dBm)	Limit (dBm)	Over Limit (dB)	SPA Reading (dBm)	S.G. Power (dBm)	TX Cable loss (dB)	TX Antenna Gain (dBi)	Polarization (H/V)
Lowest	3702	-47.03	-13	-34.03	-63.87	-53.6	1.67	8.24	H
	5556	-55.00	-13	-42.00	-77.65	-62.07	2.66	9.72	H
	7404	-50.58	-13	-37.58	-77.66	-59.73	2.46	11.61	H
									H
									H
									H
									H
	3702	-50.14	-13	-37.14	-67.14	-56.71	1.67	8.24	V
	5556	-54.90	-13	-41.90	-77.38	-61.97	2.66	9.72	V
	7404	-50.40	-13	-37.40	-77.53	-59.55	2.46	11.61	V
									V
									V
									V
									V
Middle	3744	-47.45	-13	-34.45	-64.41	-54.06	1.68	8.29	H
	5616	-55.09	-13	-42.09	-77.86	-62.14	2.69	9.75	H
	7488	-49.95	-13	-36.95	-77.21	-59.29	2.43	11.78	H
									H
									H
									H
									H
	3744	-48.60	-13	-35.60	-65.69	-55.21	1.68	8.29	V
	5616	-55.07	-13	-42.07	-77.69	-62.12	2.69	9.75	V
	7488	-49.86	-13	-36.86	-77.24	-59.2	2.43	11.78	V
									V
									V
									V
									V
Highest	3792	-41.67	-13	-28.67	-58.77	-48.32	1.70	8.35	H
	5688	-54.32	-13	-41.32	-77.23	-61.36	2.73	9.78	H
	7584	-50.08	-13	-37.08	-77.42	-59.53	2.40	11.85	H
									H
									H
									H
									H
	3792	-45.41	-13	-32.41	-62.61	-52.06	1.70	8.35	V
	5688	-54.88	-13	-41.88	-77.62	-61.92	2.73	9.78	V
	7584	-49.94	-13	-36.94	-77.38	-59.39	2.40	11.85	V
									V
									V
									V
									V

Remark: Spurious emissions within 30-1000MHz were found more than 20dB below limit line.

LTE Band 4

LTE Band 4 / 1.4MHz / 16QAM									
Channel	Frequency (MHz)	EIRP (dBm)	Limit (dBm)	Over Limit (dB)	SPA Reading (dBm)	S.G. Power (dBm)	TX Cable loss (dB)	TX Antenna Gain (dBi)	Polarization (H/V)
Lowest	3420	-41.99	-13	-28.99	-58.1	-48.06	1.58	7.65	H
	5130	-48.84	-13	-35.84	-70.32	-56.13	2.41	9.70	H
	6840	-52.10	-13	-39.10	-77.8	-60.07	2.64	10.61	H
									H
									H
									H
									H
	3420	-44.22	-13	-31.22	-60.45	-50.29	1.58	7.65	V
	5130	-51.11	-13	-38.11	-72.71	-58.4	2.41	9.70	V
	6840	-52.34	-13	-39.34	-77.81	-60.31	2.64	10.61	V
									V
									V
									V
									V
Middle	3462	-48.15	-13	-35.15	-64.32	-54.39	1.59	7.83	H
	5193	-55.67	-13	-42.67	-77.35	-62.92	2.45	9.70	H
	6927	-52.00	-13	-39.00	-78	-60.1	2.61	10.71	H
									H
									H
									H
									H
	3462	-50.18	-13	-37.18	-66.55	-56.42	1.59	7.83	V
	5193	-55.81	-13	-42.81	-77.55	-63.06	2.45	9.70	V
	6927	-52.28	-13	-39.28	-78.01	-60.38	2.61	10.71	V
									V
									V
									V
Highest	3510	-56.96	-13	-43.96	-73.22	-63.36	1.61	8.01	H
	5261	-55.81	-13	-42.81	-77.69	-63.02	2.49	9.70	H
	7014	-51.36	-13	-38.36	-77.62	-59.6	2.59	10.83	H
									H
									H
									H
									H
	3510	-54.09	-13	-41.09	-70.59	-60.49	1.61	8.01	V
	5261	-55.87	-13	-42.87	-77.76	-63.08	2.49	9.70	V
	7014	-51.58	-13	-38.58	-77.55	-59.82	2.59	10.83	V
									V
									V
									V

Remark: Spurious emissions within 30-1000MHz were found more than 20dB below limit line.

LTE Band 4 / 3MHz / 16QAM									
Channel	Frequency (MHz)	EIRP (dBm)	Limit (dBm)	Over Limit (dB)	SPA Reading (dBm)	S.G. Power (dBm)	TX Cable loss (dB)	TX Antenna Gain (dBi)	Polarization (H/V)
Lowest	3420	-41.18	-13	-28.18	-57.29	-47.25	1.58	7.65	H
	5130	-48.49	-13	-35.49	-69.97	-55.78	2.41	9.70	H
	6840	-52.06	-13	-39.06	-77.76	-60.03	2.64	10.61	H
									H
									H
									H
									H
	3420	-44.25	-13	-31.25	-60.48	-50.32	1.58	7.65	V
	5130	-50.33	-13	-37.33	-71.93	-57.62	2.41	9.70	V
	6840	-52.25	-13	-39.25	-77.72	-60.22	2.64	10.61	V
									V
									V
									V
									V
Middle	3462	-48.49	-13	-35.49	-64.66	-54.73	1.59	7.83	H
	5193	-55.64	-13	-42.64	-77.32	-62.89	2.45	9.70	H
	6924	-51.79	-13	-38.79	-77.72	-59.88	2.62	10.71	H
									H
									H
									H
									H
	3462	-51.29	-13	-38.29	-67.66	-57.53	1.59	7.83	V
	5193	-55.58	-13	-42.58	-77.32	-62.83	2.45	9.70	V
	6924	-52.25	-13	-39.25	-77.92	-60.34	2.62	10.71	V
									V
									V
									V
									V
Highest	3504	-56.33	-13	-43.33	-72.54	-62.73	1.61	8.00	H
	5256	-56.08	-13	-43.08	-77.91	-63.3	2.48	9.70	H
	7008	-51.42	-13	-38.42	-77.63	-59.65	2.59	10.82	H
									H
									H
									H
									H
	3504	-54.59	-13	-41.59	-71.05	-60.99	1.61	8.00	V
	5256	-55.99	-13	-42.99	-77.85	-63.21	2.48	9.70	V
	7008	-51.57	-13	-38.57	-77.48	-59.8	2.59	10.82	V
									V
									V
									V
									V

Remark: Spurious emissions within 30-1000MHz were found more than 20dB below limit line.

LTE Band 4 / 5MHz / 16QAM									
Channel	Frequency (MHz)	EIRP (dBm)	Limit (dBm)	Over Limit (dB)	SPA Reading (dBm)	S.G. Power (dBm)	TX Cable loss (dB)	TX Antenna Gain (dBi)	Polarization (H/V)
Lowest	3420	-40.66	-13	-27.66	-56.77	-46.73	1.58	7.65	H
	5130	-48.62	-13	-35.62	-70.1	-55.91	2.41	9.70	H
	6840	-51.54	-13	-38.54	-77.24	-59.51	2.64	10.61	H
									H
									H
									H
									H
	3420	-41.98	-13	-28.98	-58.21	-48.05	1.58	7.65	V
	5130	-50.59	-13	-37.59	-72.19	-57.88	2.41	9.70	V
	6840	-52.21	-13	-39.21	-77.68	-60.18	2.64	10.61	V
									V
									V
									V
									V
Middle	3462	-47.83	-13	-34.83	-64	-54.07	1.59	7.83	H
	5190	-54.91	-13	-41.91	-76.54	-62.16	2.45	9.70	H
	6920	-51.65	-13	-38.65	-77.58	-59.74	2.62	10.70	H
									H
									H
									H
									H
	3462	-50.12	-13	-37.12	-66.49	-56.36	1.59	7.83	V
	5190	-55.55	-13	-42.55	-77.26	-62.8	2.45	9.70	V
	6920	-51.77	-13	-38.77	-77.44	-59.86	2.62	10.70	V
									V
									V
									V
									V
Highest	3498	-55.34	-13	-42.34	-71.55	-61.73	1.60	7.99	H
	5250	-55.78	-13	-42.78	-77.61	-63	2.48	9.70	H
	7000	-51.49	-13	-38.49	-77.71	-59.7	2.59	10.80	H
									H
									H
									H
									H
	3504	-54.51	-13	-41.51	-70.97	-60.91	1.61	8.00	V
	5250	-55.97	-13	-42.97	-77.83	-63.19	2.48	9.70	V
	7000	-51.48	-13	-38.48	-77.4	-59.69	2.59	10.80	V
									V
									V
									V
									V

Remark: Spurious emissions within 30-1000MHz were found more than 20dB below limit line.

LTE Band 4 / 10MHz / 16QAM									
Channel	Frequency (MHz)	EIRP (dBm)	Limit (dBm)	Over Limit (dB)	SPA Reading (dBm)	S.G. Power (dBm)	TX Cable loss (dB)	TX Antenna Gain (dBi)	Polarization (H/V)
Lowest	3420	-42.40	-13	-29.40	-58.48	-48.47	1.58	7.65	H
	5130	-48.75	-13	-35.75	-70.23	-56.04	2.41	9.70	H
	6840	-52.05	-13	-39.05	-77.72	-60.02	2.64	10.61	H
									H
									H
									H
									H
	3420	-43.28	-13	-30.28	-59.48	-49.35	1.58	7.65	V
	5130	-50.72	-13	-37.72	-72.32	-58.01	2.41	9.70	V
	6840	-52.06	-13	-39.06	-77.52	-60.03	2.64	10.61	V
									V
									V
									V
									V
Middle	3456	-47.56	-13	-34.56	-63.74	-53.78	1.59	7.81	H
	5184	-53.80	-13	-40.80	-75.43	-61.06	2.44	9.70	H
	6912	-51.54	-13	-38.54	-77.55	-59.62	2.62	10.69	H
									H
									H
									H
									H
	3456	-49.79	-13	-36.79	-66.11	-56.01	1.59	7.81	V
	5184	-54.38	-13	-41.38	-75.93	-61.64	2.44	9.70	V
	6912	-52.01	-13	-39.01	-77.67	-60.09	2.62	10.69	V
									V
									V
									V
									V
Highest	3492	-51.64	-13	-38.64	-67.85	-58	1.60	7.96	H
	5232	-56.18	-13	-43.18	-77.94	-63.41	2.47	9.70	H
	6978	-50.94	-13	-37.94	-77.14	-59.12	2.60	10.77	H
									H
									H
									H
									H
	3492	-54.10	-13	-41.10	-70.49	-60.46	1.60	7.96	V
	5232	-55.98	-13	-42.98	-77.74	-63.21	2.47	9.70	V
	6978	-51.64	-13	-38.64	-77.52	-59.82	2.60	10.77	V
									V
									V
									V
									V

Remark: Spurious emissions within 30-1000MHz were found more than 20dB below limit line.

LTE Band 4 / 15MHz / 16QAM									
Channel	Frequency (MHz)	EIRP (dBm)	Limit (dBm)	Over Limit (dB)	SPA Reading (dBm)	S.G. Power (dBm)	TX Cable loss (dB)	TX Antenna Gain (dBi)	Polarization (H/V)
Lowest	3420	-40.22	-13	-27.22	-56.34	-46.29	1.58	7.65	H
	5130	-48.55	-13	-35.55	-70.05	-55.84	2.41	9.70	H
	6840	-52.25	-13	-39.25	-77.92	-60.22	2.64	10.61	H
									H
									H
									H
									H
	3420	-43.28	-13	-30.28	-59.51	-49.35	1.58	7.65	V
	5130	-51.76	-13	-38.76	-73.36	-59.05	2.41	9.70	V
	6840	-52.24	-13	-39.24	-77.74	-60.21	2.64	10.61	V
									V
									V
									V
									V
Middle	3450	-47.62	-13	-34.62	-63.68	-53.81	1.59	7.78	H
	5178	-54.88	-13	-41.88	-76.52	-62.14	2.44	9.70	H
	6900	-52.40	-13	-39.40	-78	-60.46	2.62	10.68	H
									H
									H
									H
									H
	3450	-49.95	-13	-36.95	-66.29	-56.14	1.59	7.78	V
	5178	-54.48	-13	-41.48	-76.37	-61.74	2.44	9.70	V
	6900	-52.38	-13	-39.38	-77.97	-60.44	2.62	10.68	V
									V
									V
									V
									V
Highest	3480	-50.38	-13	-37.38	-66.31	-56.69	1.60	7.91	H
	5220	-56.39	-13	-43.39	-77.83	-63.63	2.46	9.70	H
	6960	-51.70	-13	-38.70	-77.7	-59.85	2.60	10.75	H
									H
									H
									H
									H
	3480	-50.74	-13	-37.74	-67.16	-57.05	1.60	7.91	V
	5220	-56.23	-13	-43.23	-77.92	-63.47	2.46	9.70	V
	6960	-51.74	-13	-38.74	-77.57	-59.89	2.60	10.75	V
									V
									V
									V
									V

Remark: Spurious emissions within 30-1000MHz were found more than 20dB below limit line.

LTE Band 4 / 20MHz / 16QAM									
Channel	Frequency (MHz)	EIRP (dBm)	Limit (dBm)	Over Limit (dB)	SPA Reading (dBm)	S.G. Power (dBm)	TX Cable loss (dB)	TX Antenna Gain (dBi)	Polarization (H/V)
Lowest	3420	-41.36	-13	-28.36	-57.41	-47.43	1.58	7.65	H
	5136	-49.47	-13	-36.47	-70.99	-56.75	2.42	9.70	H
	6840	-51.90	-13	-38.90	-77.68	-59.87	2.64	10.61	H
									H
									H
									H
									H
	3420	-43.02	-13	-30.02	-59.32	-49.09	1.58	7.65	V
	5136	-51.11	-13	-38.11	-72.65	-58.39	2.42	9.70	V
	6840	-52.27	-13	-39.27	-77.75	-60.24	2.64	10.61	V
									V
									V
									V
									V
Middle	3450	-48.24	-13	-35.24	-64.28	-54.43	1.59	7.78	H
	5172	-52.20	-13	-39.20	-73.84	-59.46	2.44	9.70	H
	6888	-51.55	-13	-38.55	-77.4	-59.59	2.63	10.67	H
									H
									H
									H
									H
	3450	-49.45	-13	-36.45	-65.56	-55.64	1.59	7.78	V
	5172	-53.78	-13	-40.78	-75.46	-61.04	2.44	9.70	V
	6888	-51.98	-13	-38.98	-77.54	-60.02	2.63	10.67	V
									V
									V
									V
									V
Highest	3474	-47.71	-13	-34.71	-63.89	-54	1.60	7.89	H
	5208	-55.26	-13	-42.26	-76.99	-62.5	2.46	9.70	H
	6944	-51.05	-13	-38.05	-77.1	-59.17	2.61	10.73	H
									H
									H
									H
									H
	3474	-51.07	-13	-38.07	-67.47	-57.36	1.60	7.89	V
	5208	-55.73	-13	-42.73	-77.51	-62.97	2.46	9.70	V
	6944	-51.35	-13	-38.35	-77.12	-59.47	2.61	10.73	V
									V
									V
									V
									V

Remark: Spurious emissions within 30-1000MHz were found more than 20dB below limit line.

LTE Band 5

LTE Band 5 / 1.4MHz / QPSK									
Channel	Frequency (MHz)	ERP (dBm)	Limit (dBm)	Over Limit (dB)	SPA Reading (dBm)	S.G. Power (dBm)	TX Cable loss (dB)	TX Antenna Gain (dBi)	Polarization (H/V)
Lowest	1648	-42.57	-13	-29.57	-52.34	-44.33	0.98	4.89	H
	2472	-43.47	-13	-30.47	-57.17	-45.35	1.28	5.32	H
	3296	-54.34	-13	-41.34	-70.3	-57.75	1.54	7.10	H
									H
									H
									H
									H
	1648	-39.65	-13	-26.65	-49.36	-41.41	0.98	4.89	V
	2472	-47.65	-13	-34.65	-61.39	-49.53	1.28	5.32	V
	3296	-54.11	-13	-41.11	-70.01	-57.52	1.54	7.10	V
									V
									V
									V
									V
Middle	1672	-40.62	-13	-27.62	-50.52	-42.3	0.99	4.82	H
	2512	-44.22	-13	-31.22	-58.07	-46.19	1.29	5.41	H
	3344	-53.36	-13	-40.36	-69.39	-56.97	1.56	7.31	H
									H
									H
									H
									H
	1672	-36.49	-13	-23.49	-46.33	-38.17	0.99	4.82	V
	2512	-44.45	-13	-31.45	-58.32	-46.42	1.29	5.41	V
	3344	-54.41	-13	-41.41	-70.45	-58.02	1.56	7.31	V
									V
									V
									V
Highest	1696	-38.31	-13	-25.31	-48.3	-39.91	1.00	4.75	H
	2544	-40.07	-13	-27.07	-54.04	-42.05	1.30	5.44	H
	3391	-54.03	-13	-41.03	-70.11	-57.83	1.57	7.52	H
									H
									H
									H
									H
	1696	-35.75	-13	-22.75	-45.68	-37.35	1.00	4.75	V
	2544	-42.58	-13	-29.58	-56.54	-44.56	1.30	5.44	V
	3391	-53.47	-13	-40.47	-69.65	-57.27	1.57	7.52	V
									V
									V
									V

Remark: Spurious emissions within 30-1000MHz were found more than 20dB below limit line.

LTE Band 5 / 3MHz / QPSK									
Channel	Frequency (MHz)	ERP (dBm)	Limit (dBm)	Over Limit (dB)	SPA Reading (dBm)	S.G. Power (dBm)	TX Cable loss (dB)	TX Antenna Gain (dBi)	Polarization (H/V)
Lowest	1648	-43.96	-13	-30.96	-53.73	-45.72	0.98	4.89	H
	2472	-44.86	-13	-31.86	-58.56	-46.74	1.28	5.32	H
	3296	-53.51	-13	-40.51	-69.47	-56.92	1.54	7.10	H
									H
									H
									H
									H
	1648	-40.16	-13	-27.16	-49.87	-41.92	0.98	4.89	V
	2472	-47.19	-13	-34.19	-60.93	-49.07	1.28	5.32	V
	3296	-54.52	-13	-41.52	-70.42	-57.93	1.54	7.10	V
									V
									V
									V
									V
Middle	1672	-39.48	-13	-26.48	-49.38	-41.16	0.99	4.82	H
	2504	-41.25	-13	-28.25	-55.04	-43.21	1.29	5.40	H
	1672	-39.48	-13	-26.48	-49.38	-41.16	0.99	4.82	H
									H
									H
									H
									H
	1672	-38.00	-13	-25.00	-47.84	-39.68	0.99	4.82	V
	2504	-48.20	-13	-35.20	-62.03	-50.16	1.29	5.40	V
	3340	-53.55	-13	-40.55	-69.59	-57.14	1.55	7.30	V
									V
									V
									V
									V
Highest	1696	-37.65	-13	-24.65	-47.64	-39.25	1.00	4.75	H
	2536	-40.71	-13	-27.71	-54.62	-42.69	1.30	5.43	H
	3380	-53.25	-13	-40.25	-69.32	-57.01	1.57	7.47	H
									H
									H
									H
									H
	1696	-35.30	-13	-22.30	-45.23	-36.9	1.00	4.75	V
	2536	-45.02	-13	-32.02	-58.94	-47	1.30	5.43	V
	3380	-53.46	-13	-40.46	-69.6	-57.22	1.57	7.47	V
									V
									V
									V
									V

Remark: Spurious emissions within 30-1000MHz were found more than 20dB below limit line.

LTE Band 5 / 5MHz / QPSK									
Channel	Frequency (MHz)	ERP (dBm)	Limit (dBm)	Over Limit (dB)	SPA Reading (dBm)	S.G. Power (dBm)	TX Cable loss (dB)	TX Antenna Gain (dBi)	Polarization (H/V)
Lowest	1648	-43.95	-13	-30.95	-53.72	-45.71	0.98	4.89	H
	2472	-45.22	-13	-32.22	-58.92	-47.1	1.28	5.32	H
	3296	-54.12	-13	-41.12	-70.08	-57.53	1.54	7.10	H
									H
									H
									H
									H
	1648	-41.36	-13	-28.36	-51.07	-43.12	0.98	4.89	V
	2472	-48.68	-13	-35.68	-62.42	-50.56	1.28	5.32	V
	3296	-53.78	-13	-40.78	-69.68	-57.19	1.54	7.10	V
									V
									V
									V
									V
Middle	1672	-39.76	-13	-26.76	-49.66	-41.44	0.99	4.82	H
	2504	-42.59	-13	-29.59	-56.38	-44.55	1.29	5.40	H
	3336	-53.91	-13	-40.91	-69.92	-57.49	1.55	7.28	H
									H
									H
									H
									H
	1672	-37.26	-13	-24.26	-47.1	-38.94	0.99	4.82	V
	2504	-45.77	-13	-32.77	-59.6	-47.73	1.29	5.40	V
	3336	-54.01	-13	-41.01	-70.01	-57.59	1.55	7.28	V
									V
									V
									V
									V
Highest	1688	-39.86	-13	-26.86	-49.8	-41.49	1.00	4.77	H
	2536	-43.40	-13	-30.40	-57.31	-45.38	1.30	5.43	H
	3376	-53.84	-13	-40.84	-69.91	-57.58	1.57	7.45	H
									H
									H
									H
									H
	1688	-36.75	-13	-23.75	-46.63	-38.38	1.00	4.77	V
	2536	-46.28	-13	-33.28	-60.2	-48.26	1.30	5.43	V
	3376	-52.94	-13	-39.94	-69.08	-56.68	1.57	7.45	V
									V
									V
									V
									V

Remark: Spurious emissions within 30-1000MHz were found more than 20dB below limit line.

LTE Band 5 / 10MHz / QPSK									
Channel	Frequency (MHz)	ERP (dBm)	Limit (dBm)	Over Limit (dB)	SPA Reading (dBm)	S.G. Power (dBm)	TX Cable loss (dB)	TX Antenna Gain (dBi)	Polarization (H/V)
Lowest	1648	-44.29	-13	-31.29	-54.06	-46.05	0.98	4.89	H
	2472	-45.00	-13	-32.00	-58.7	-46.88	1.28	5.32	H
	3296	-53.48	-13	-40.48	-69.44	-56.89	1.54	7.10	H
									H
									H
									H
									H
	1648	-41.25	-13	-28.25	-50.96	-43.01	0.98	4.89	V
	2472	-48.84	-13	-35.84	-62.58	-50.72	1.28	5.32	V
	3296	-51.78	-13	-38.78	-67.68	-55.19	1.54	7.10	V
									V
									V
									V
									V
Middle	1664	-41.68	-13	-28.68	-51.53	-43.39	0.98	4.84	H
	2496	-42.29	-13	-29.29	-56.08	-44.24	1.29	5.39	H
	3328	-54.02	-13	-41.02	-70.02	-57.56	1.55	7.24	H
									H
									H
									H
									H
	1664	-39.59	-13	-26.59	-49.38	-41.3	0.98	4.84	V
	2496	-46.00	-13	-33.00	-59.83	-47.95	1.29	5.39	V
	3328	-53.32	-13	-40.32	-69.31	-56.86	1.55	7.24	V
									V
									V
									V
									V
Highest	1680	-38.11	-13	-25.11	-48.05	-39.76	0.99	4.80	H
	2520	-42.93	-13	-29.93	-56.79	-44.9	1.30	5.42	H
	3358	-53.86	-13	-40.86	-69.9	-57.53	1.56	7.38	H
									H
									H
									H
									H
	1680	-37.14	-13	-24.14	-47.02	-38.79	0.99	4.80	V
	2520	-46.05	-13	-33.05	-59.93	-48.02	1.30	5.42	V
	3358	-54.23	-13	-41.23	-70.32	-57.9	1.56	7.38	V
									V
									V
									V
									V

Remark: Spurious emissions within 30-1000MHz were found more than 20dB below limit line.

LTE Band 26

LTE Band 26 / 1.4MHz / 16QAM									
Channel	Frequency (MHz)	EIRP (dBm)	Limit (dBm)	Over Limit (dB)	SPA Reading (dBm)	S.G. Power (dBm)	TX Cable loss (dB)	TX Antenna Gain (dBi)	Polarization (H/V)
Lowest	1648	-45.89	-13	-32.89	-55.66	-47.65	0.98	4.89	H
	2472	-41.11	-13	-28.11	-54.81	-42.99	1.28	5.32	H
	3296	-52.87	-13	-39.87	-68.83	-56.28	1.54	7.10	H
									H
									H
									H
									H
	1648	-41.69	-13	-28.69	-51.4	-43.45	0.98	4.89	V
	2472	-40.79	-13	-27.79	-54.53	-42.67	1.28	5.32	V
	3296	-54.52	-13	-41.52	-70.42	-57.93	1.54	7.10	V
									V
									V
									V
									V
Middle	1672	-41.99	-13	-28.99	-51.89	-43.67	0.99	4.82	H
	2512	-39.60	-13	-26.60	-53.45	-41.57	1.29	5.41	H
	3344	-53.24	-13	-40.24	-69.27	-56.85	1.56	7.31	H
									H
									H
									H
									H
	1672	-38.81	-13	-25.81	-48.65	-40.49	0.99	4.82	V
	2512	-39.52	-13	-26.52	-53.39	-41.49	1.29	5.41	V
	3344	-54.13	-13	-41.13	-70.17	-57.74	1.56	7.31	V
									V
									V
									V
Highest	1696	-39.62	-13	-26.62	-49.61	-41.22	1.00	4.75	H
	2544	-38.68	-13	-25.68	-52.65	-40.66	1.30	5.44	H
	3392	-52.05	-13	-39.05	-70.13	-55.85	1.57	7.52	H
									H
									H
									H
									H
	1696	-37.63	-13	-24.63	-47.56	-39.23	1.00	4.75	V
	2544	-40.63	-13	-27.63	-54.55	-42.61	1.30	5.44	V
	3392	-53.47	-13	-40.47	-69.65	-57.27	1.57	7.52	V
									V
									V
									V

Remark: Spurious emissions within 30-1000MHz were found more than 20dB below limit line.

LTE Band 26 / 3MHz / 16QAM									
Channel	Frequency (MHz)	EIRP (dBm)	Limit (dBm)	Over Limit (dB)	SPA Reading (dBm)	S.G. Power (dBm)	TX Cable loss (dB)	TX Antenna Gain (dBi)	Polarization (H/V)
Lowest	1648	-44.54	-13	-31.54	-54.31	-46.3	0.98	4.89	H
	2472	-38.70	-13	-25.70	-52.4	-40.58	1.28	5.32	H
	3296	-54.03	-13	-41.03	-69.99	-57.44	1.54	7.10	H
									H
									H
									H
									H
	1648	-42.21	-13	-29.21	-51.92	-43.97	0.98	4.89	V
	2472	-41.78	-13	-28.78	-55.52	-43.66	1.28	5.32	V
	3296	-53.82	-13	-40.82	-69.72	-57.23	1.54	7.10	V
									V
									V
									V
									V
Middle	1672	-39.29	-13	-26.29	-49.19	-40.97	0.99	4.82	H
	2504	-39.33	-13	-26.33	-53.12	-41.29	1.29	5.40	H
	3344	-54.60	-13	-41.60	-70.33	-58.21	1.56	7.31	H
									H
									H
									H
									H
	1672	-38.39	-13	-25.39	-48.23	-40.07	0.99	4.82	V
	2504	-40.92	-13	-27.92	-54.75	-42.88	1.29	5.40	V
	3344	-54.18	-13	-41.18	-70.22	-57.79	1.56	7.31	V
									V
									V
									V
									V
Highest	1696	-39.35	-13	-26.35	-49.34	-40.95	1.00	4.75	H
	2536	-39.56	-13	-26.56	-53.47	-41.54	1.30	5.43	H
	3392	-54.18	-13	-41.18	-70.26	-57.98	1.57	7.52	H
									H
									H
									H
									H
	1696	-36.93	-13	-23.93	-46.86	-38.53	1.00	4.75	V
	2536	-41.59	-13	-28.59	-55.51	-43.57	1.30	5.43	V
	3392	-53.23	-13	-40.23	-69.41	-57.03	1.57	7.52	V
									V
									V
									V
									V

Remark: Spurious emissions within 30-1000MHz were found more than 20dB below limit line.

LTE Band 26 / 5MHz / 16QAM									
Channel	Frequency (MHz)	EIRP (dBm)	Limit (dBm)	Over Limit (dB)	SPA Reading (dBm)	S.G. Power (dBm)	TX Cable loss (dB)	TX Antenna Gain (dBi)	Polarization (H/V)
Lowest	1648	-45.98	-13	-32.98	-55.75	-47.74	0.98	4.89	H
	2472	-39.34	-13	-26.34	-53.04	-41.22	1.28	5.32	H
	3296	-53.94	-13	-40.94	-69.9	-57.35	1.54	7.10	H
									H
									H
									H
									H
	1648	-42.87	-13	-29.87	-52.58	-44.63	0.98	4.89	V
	2472	-42.26	-13	-29.26	-56	-44.14	1.28	5.32	V
	3296	-54.05	-13	-41.05	-69.95	-57.46	1.54	7.10	V
									V
									V
									V
									V
Middle	1672	-41.95	-13	-28.95	-51.85	-43.63	0.99	4.82	H
	2504	-40.59	-13	-27.59	-54.38	-42.55	1.29	5.40	H
	3344	-53.70	-13	-40.70	-69.73	-57.31	1.56	7.31	H
									H
									H
									H
									H
	1672	-39.65	-13	-26.65	-49.49	-41.33	0.99	4.82	V
	2504	-41.18	-13	-28.18	-55.01	-43.14	1.29	5.40	V
	3344	-54.14	-13	-41.14	-70.18	-57.75	1.56	7.31	V
									V
									V
									V
									V
Highest	1688	-40.06	-13	-27.06	-50	-41.69	1.00	4.77	H
	2536	-39.49	-13	-26.49	-53.4	-41.47	1.30	5.43	H
	3376	-53.81	-13	-40.81	-69.88	-57.55	1.57	7.45	H
									H
									H
									H
									H
	1688	-37.08	-13	-24.08	-46.96	-38.71	1.00	4.77	V
	2536	-42.23	-13	-29.23	-56.15	-44.21	1.30	5.43	V
	3376	-54.10	-13	-41.10	-70.24	-57.84	1.57	7.45	V
									V
									V
									V
									V

Remark: Spurious emissions within 30-1000MHz were found more than 20dB below limit line.

LTE Band 26 / 10MHz / 16QAM									
Channel	Frequency (MHz)	EIRP (dBm)	Limit (dBm)	Over Limit (dB)	SPA Reading (dBm)	S.G. Power (dBm)	TX Cable loss (dB)	TX Antenna Gain (dBi)	Polarization (H/V)
Lowest	1648	-45.96	-13	-32.96	-55.73	-47.72	0.98	4.89	H
	2472	-37.40	-13	-24.40	-51.1	-39.28	1.28	5.32	H
	3298	-53.69	-13	-40.69	-69.65	-57.11	1.54	7.11	H
									H
									H
									H
									H
	1648	-43.26	-13	-30.26	-52.97	-45.02	0.98	4.89	V
	2472	-40.63	-13	-27.63	-54.37	-42.51	1.28	5.32	V
	3298	-54.03	-13	-41.03	-69.93	-57.45	1.54	7.11	V
									V
									V
									V
									V
Middle	1664	-40.46	-13	-27.46	-50.31	-42.17	0.98	4.84	H
	2496	-35.49	-13	-22.49	-49.28	-37.44	1.29	5.39	H
	3328	-54.22	-13	-41.22	-70.22	-57.76	1.55	7.24	H
									H
									H
									H
									H
	1664	-40.61	-13	-27.61	-50.4	-42.32	0.98	4.84	V
	2496	-37.96	-13	-24.96	-51.79	-39.91	1.29	5.39	V
	3328	-53.78	-13	-40.78	-69.77	-57.32	1.55	7.24	V
									V
									V
									V
									V
Highest	1680	-40.08	-13	-27.08	-50.02	-41.73	0.99	4.80	H
	2520	-40.23	-13	-27.23	-54.09	-42.2	1.30	5.42	H
	3358	-54.37	-13	-41.37	-70.41	-58.04	1.56	7.38	H
									H
									H
									H
									H
	1680	-37.30	-13	-24.30	-47.18	-38.95	0.99	4.80	V
	2520	-42.30	-13	-29.30	-56.18	-44.27	1.30	5.42	V
	3358	-53.13	-13	-40.13	-69.22	-56.8	1.56	7.38	V
									V
									V
									V
									V

Remark: Spurious emissions within 30-1000MHz were found more than 20dB below limit line.

LTE Band 26 / 15MHz / 16QAM									
Channel	Frequency (MHz)	EIRP (dBm)	Limit (dBm)	Over Limit (dB)	SPA Reading (dBm)	S.G. Power (dBm)	TX Cable loss (dB)	TX Antenna Gain (dBi)	Polarization (H/V)
Lowest	1648	-46.57	-13	-33.57	-56.34	-48.33	0.98	4.89	H
	2472	-39.81	-13	-26.81	-53.51	-41.69	1.28	5.32	H
	3296	-53.37	-13	-40.37	-69.33	-56.78	1.54	7.10	H
									H
									H
									H
									H
	1648	-42.98	-13	-29.98	-52.69	-44.74	0.98	4.89	V
	2472	-42.08	-13	-29.08	-55.82	-43.96	1.28	5.32	V
	3296	-53.76	-13	-40.76	-69.66	-57.17	1.54	7.10	V
									V
									V
									V
									V
Middle	1656	-43.04	-13	-30.04	-52.89	-44.77	0.98	4.86	H
	2488	-38.60	-13	-25.60	-52.38	-40.53	1.29	5.36	H
	3320	-54.16	-13	-41.16	-70.15	-57.67	1.55	7.21	H
									H
									H
									H
									H
	1656	-39.12	-13	-26.12	-48.91	-40.85	0.98	4.86	V
	2488	-38.72	-13	-25.72	-52.54	-40.65	1.29	5.36	V
	3320	-54.07	-13	-41.07	-70.02	-57.58	1.55	7.21	V
									V
									V
									V
									V
Highest	1672	-42.07	-13	-29.07	-51.97	-43.75	0.99	4.82	H
	2504	-36.74	-13	-23.74	-50.53	-38.7	1.29	5.40	H
	3336	-53.94	-13	-40.94	-69.95	-57.52	1.55	7.28	H
									H
									H
									H
									H
	1672	-38.59	-13	-25.59	-48.43	-40.27	0.99	4.82	V
	2504	-38.82	-13	-25.82	-52.65	-40.78	1.29	5.40	V
	3336	-53.37	-13	-40.37	-69.37	-56.95	1.55	7.28	V
									V
									V
									V
									V

Remark: Spurious emissions within 30-1000MHz were found more than 20dB below limit line.

LTE Band 7

LTE Band 7 / 5MHz / QPSK									
Channel	Frequency (MHz)	EIRP (dBm)	Limit (dBm)	Over Limit (dB)	SPA Reading (dBm)	S.G. Power (dBm)	TX Cable loss (dB)	TX Antenna Gain (dBi)	Polarization (H/V)
Lowest	4998	-39.66	-25	-14.66	-60.74	-47.02	2.34	9.70	H
	7500	-43.47	-25	-18.47	-70.73	-52.84	2.43	11.80	H
	10008	-42.38	-25	-17.38	-73.87	-51.89	2.70	12.20	H
									H
									H
									H
									H
	4998	-33.89	-25	-8.89	-55.14	-41.25	2.34	9.70	V
	7500	-43.58	-25	-18.58	-69.92	-52.95	2.43	11.80	V
	10008	-42.80	-25	-17.80	-73.78	-52.31	2.70	12.20	V
									V
									V
									V
									V
Middle	5064	-39.69	-25	-14.69	-60.94	-47.02	2.37	9.70	H
	7596	-43.54	-25	-18.54	-70.89	-53	2.40	11.86	H
	10134	-41.31	-25	-16.31	-73.04	-50.87	2.70	12.25	H
									H
									H
									H
									H
	5064	-36.56	-25	-11.56	-57.98	-43.89	2.37	9.70	V
	7596	-43.57	-25	-18.57	-70.98	-53.03	2.40	11.86	V
	10134	-42.55	-25	-17.55	-73.71	-52.11	2.70	12.25	V
									V
									V
									V
Highest	5130	-38.79	-25	-13.79	-60.26	-46.08	2.41	9.70	H
	7692	-43.31	-25	-18.31	-70.7	-52.86	2.37	11.92	H
	10260	-40.98	-25	-15.98	-72.93	-50.59	2.69	12.30	H
									H
									H
									H
									H
	5130	-37.59	-25	-12.59	-59.21	-44.88	2.41	9.70	V
	7692	-42.90	-25	-17.90	-70.44	-52.45	2.37	11.92	V
	10260	-42.33	-25	-17.33	-73.52	-51.94	2.69	12.30	V
									V
									V
									V

Remark: Spurious emissions within 30-1000MHz were found more than 20dB below limit line.

LTE Band 7 / 10MHz / QPSK									
Channel	Frequency (MHz)	EIRP (dBm)	Limit (dBm)	Over Limit (dB)	SPA Reading (dBm)	S.G. Power (dBm)	TX Cable loss (dB)	TX Antenna Gain (dBi)	Polarization (H/V)
Lowest	5004	-39.11	-25	-14.11	-60.24	-46.47	2.34	9.70	H
	7506	-43.96	-25	-18.96	-71.23	-53.34	2.43	11.80	H
	10008	-42.53	-25	-17.53	-74.2	-52.04	2.70	12.20	H
									H
									H
									H
									H
	5004	-35.96	-25	-10.96	-57.31	-43.32	2.34	9.70	V
	7506	-43.63	-25	-18.63	-71.02	-53.01	2.43	11.80	V
	10008	-43.07	-25	-18.07	-74.11	-52.58	2.70	12.20	V
									V
									V
									V
									V
Middle	5064	-39.28	-25	-14.28	-60.56	-46.61	2.37	9.70	H
	7596	-43.88	-25	-18.88	-71.24	-53.34	2.40	11.86	H
	10128	-40.12	-25	-15.12	-72.92	-49.68	2.70	12.25	H
									H
									H
									H
									H
	5064	-36.09	-25	-11.09	-57.55	-43.42	2.37	9.70	V
	7596	-43.06	-25	-18.06	-70.51	-52.52	2.40	11.86	V
	10128	-42.98	-25	-17.98	-74.1	-52.54	2.70	12.25	V
									V
									V
									V
									V
Highest	5124	-38.36	-25	-13.36	-59.87	-45.65	2.41	9.70	H
	7686	-42.92	-25	-17.92	-70.27	-52.46	2.37	11.91	H
	10242	-41.79	-25	-16.79	-73.75	-51.39	2.69	12.30	H
									H
									H
									H
									H
	5124	-37.93	-25	-12.93	-59.57	-45.22	2.41	9.70	V
	7686	-42.41	-25	-17.41	-69.89	-51.95	2.37	11.91	V
	10242	-42.76	-25	-17.76	-74	-52.36	2.69	12.30	V
									V
									V
									V
									V

Remark: Spurious emissions within 30-1000MHz were found more than 20dB below limit line.

LTE Band 7 / 15MHz / QPSK									
Channel	Frequency (MHz)	EIRP (dBm)	Limit (dBm)	Over Limit (dB)	SPA Reading (dBm)	S.G. Power (dBm)	TX Cable loss (dB)	TX Antenna Gain (dBi)	Polarization (H/V)
Lowest	5004	-38.36	-25	-13.36	-59.45	-45.72	2.34	9.70	H
	7500	-41.75	-25	-16.75	-69.04	-51.12	2.43	11.80	H
	10008	-41.96	-25	-16.96	-73.57	-51.47	2.70	12.20	H
									H
									H
									H
									H
	5004	-36.65	-25	-11.65	-57.98	-44.01	2.34	9.70	V
	7500	-43.25	-25	-18.25	-70.57	-52.62	2.43	11.80	V
	10008	-42.94	-25	-17.94	-74.02	-52.45	2.70	12.20	V
									V
									V
									V
									V
Middle	5058	-38.72	-25	-13.72	-60.01	-46.05	2.37	9.70	H
	7584	-43.37	-25	-18.37	-70.71	-52.82	2.40	11.85	H
	10116	-42.24	-25	-17.24	-73.9	-51.79	2.70	12.25	H
									H
									H
									H
									H
	5058	-37.63	-25	-12.63	-59	-44.96	2.37	9.70	V
	7584	-42.06	-25	-17.06	-69.5	-51.51	2.40	11.85	V
	10116	-42.58	-25	-17.58	-73.7	-52.13	2.70	12.25	V
									V
									V
									V
									V
Highest	5112	-38.16	-25	-13.16	-59.63	-45.46	2.40	9.70	H
	7668	-43.36	-25	-18.36	-70.74	-52.89	2.38	11.90	H
	10224	-41.18	-25	-16.18	-73.12	-50.77	2.69	12.29	H
									H
									H
									H
									H
	5112	-36.05	-25	-11.05	-57.62	-43.35	2.40	9.70	V
	7668	-42.89	-25	-17.89	-70.28	-52.42	2.38	11.90	V
	10224	-42.47	-25	-17.47	-73.68	-52.06	2.69	12.29	V
									V
									V
									V
									V

Remark: Spurious emissions within 30-1000MHz were found more than 20dB below limit line.

LTE Band 7 / 20MHz / QPSK									
Channel	Frequency (MHz)	EIRP (dBm)	Limit (dBm)	Over Limit (dB)	SPA Reading (dBm)	S.G. Power (dBm)	TX Cable loss (dB)	TX Antenna Gain (dBi)	Polarization (H/V)
Lowest	5004	-37.28	-25	-12.28	-58.35	-44.64	2.34	9.70	H
	7500	-41.78	-25	-16.78	-69.1	-51.15	2.43	11.80	H
	10008	-42.65	-25	-17.65	-74.32	-52.16	2.70	12.20	H
									H
									H
									H
									H
	5004	-35.78	-25	-10.78	-57.08	-43.14	2.34	9.70	V
	7500	-42.31	-25	-17.31	-69.69	-51.68	2.43	11.80	V
	10008	-43.08	-25	-18.08	-74.18	-52.59	2.70	12.20	V
									V
									V
									V
									V
Middle	5052	-41.03	-25	-16.03	-62.27	-48.36	2.37	9.70	H
	7578	-44.12	-25	-19.12	-71.4	-53.56	2.40	11.85	H
	10098	-42.13	-25	-17.13	-74.04	-51.67	2.70	12.24	H
									H
									H
									H
									H
	5052	-37.34	-25	-12.34	-58.84	-44.67	2.37	9.70	V
	7578	-43.12	-25	-18.12	-70.59	-52.56	2.40	11.85	V
	10098	-42.64	-25	-17.64	-73.71	-52.18	2.70	12.24	V
									V
									V
									V
									V
Highest	5100	-39.94	-25	-14.94	-61.32	-47.25	2.39	9.70	H
	7650	-43.84	-25	-18.84	-71.27	-53.35	2.38	11.89	H
	10206	-41.78	-25	-16.78	-73.64	-51.37	2.70	12.28	H
									H
									H
									H
									H
	5100	-35.13	-25	-10.13	-56.65	-42.44	2.39	9.70	V
	7650	-43.23	-25	-18.23	-70.69	-52.74	2.38	11.89	V
	10206	-42.43	-25	-17.43	-73.57	-52.02	2.70	12.28	V
									V
									V
									V
									V

Remark: Spurious emissions within 30-1000MHz were found more than 20dB below limit line.

LTE Band 12

LTE Band 12 / 1.4MHz / QPSK									
Channel	Frequency (MHz)	ERP (dBm)	Limit (dBm)	Over Limit (dB)	SPA Reading (dBm)	S.G. Power (dBm)	TX Cable loss (dB)	TX Antenna Gain (dBi)	Polarization (H/V)
Lowest	1400	-47.85	-13.00	-34.85	-56.04	-49.51	0.87	4.68	H
	2096	-42.14	-13.00	-29.14	-53.87	-43.01	1.16	4.19	H
	2800	-43.93	-13.00	-30.93	-58.81	-46.04	1.38	5.64	H
									H
									H
									H
									H
	1400	-36.28	-13.00	-23.28	-44.41	-37.94	0.87	4.68	V
	2096	-49.61	-13.00	-36.61	-61.33	-50.48	1.16	4.19	V
	2800	-40.73	-13.00	-27.73	-55.33	-42.84	1.38	5.64	V
									V
									V
									V
									V
Middle	1416	-35.85	-13.00	-22.85	-44.04	-37.60	0.87	4.78	H
	2120	-48.65	-13.00	-35.65	-60.55	-49.59	1.17	4.26	H
	2832	-40.84	-13.00	-27.84	-55.85	-42.96	1.39	5.67	H
									H
									H
									H
									H
	1416	-36.52	-13.00	-23.52	-44.65	-38.27	0.87	4.78	V
	2120	-47.01	-13.00	-34.01	-58.90	-47.95	1.17	4.26	V
	2832	-39.36	-13.00	-26.36	-54.05	-41.48	1.39	5.67	V
									V
									V
									V
Highest	1432	-34.72	-13.00	-21.72	-43.13	-36.57	0.88	4.88	H
	2144	-41.75	-13.00	-28.75	-53.74	-42.75	1.18	4.33	H
	2856	-37.79	-13.00	-24.79	-52.86	-39.92	1.40	5.68	H
									H
									H
									H
									H
	1432	-38.31	-13.00	-25.31	-46.65	-40.16	0.88	4.88	V
	2144	-43.04	-13.00	-30.04	-55.02	-44.04	1.18	4.33	V
	2856	-39.06	-13.00	-26.06	-53.79	-41.19	1.40	5.68	V
									V
									V
									V

Remark: Spurious emissions within 30-1000MHz were found more than 20dB below limit line.

LTE Band 12 / 3MHz / QPSK									
Channel	Frequency (MHz)	ERP (dBm)	Limit (dBm)	Over Limit (dB)	SPA Reading (dBm)	S.G. Power (dBm)	TX Cable loss (dB)	TX Antenna Gain (dBi)	Polarization (H/V)
Lowest	1400	-44.50	-13.00	-31.50	-52.69	-46.16	0.87	4.68	H
	2096	-39.75	-13.00	-26.75	-51.60	-40.62	1.16	4.19	H
	2800	-38.60	-13.00	-25.60	-53.48	-40.71	1.38	5.64	H
									H
									H
									H
									H
	1400	-38.88	-13.00	-25.88	-46.99	-40.54	0.87	4.68	V
	2096	-48.71	-13.00	-35.71	-60.38	-49.58	1.16	4.19	V
	2800	-39.66	-13.00	-26.66	-54.29	-41.77	1.38	5.64	V
									V
									V
									V
									V
Middle	1416	-51.13	-13.00	-38.13	-59.35	-52.88	0.87	4.78	H
	2120	-44.32	-13.00	-31.32	-56.18	-45.26	1.17	4.26	H
	2824	-44.75	-13.00	-31.75	-59.72	-46.87	1.39	5.66	H
									H
									H
									H
									H
	1416	-47.27	-13.00	-34.27	-55.35	-49.02	0.87	4.78	V
	2120	-49.50	-13.00	-36.50	-61.33	-50.44	1.17	4.26	V
	2824	-43.40	-13.00	-30.40	-57.98	-45.52	1.39	5.66	V
									V
									V
									V
									V
Highest	1424	-43.03	-13.00	-30.03	-51.52	-44.83	0.88	4.83	H
	2136	-43.09	-13.00	-30.09	-55.11	-44.07	1.18	4.31	H
	2856	-41.35	-13.00	-28.35	-56.31	-43.48	1.40	5.68	H
									H
									H
									H
									H
	1424	-39.04	-13.00	-26.04	-47.38	-40.84	0.88	4.83	V
	2136	-47.14	-13.00	-34.14	-59.10	-48.12	1.18	4.31	V
	2856	-42.15	-13.00	-29.15	-56.75	-44.28	1.40	5.68	V
									V
									V
									V
									V

Remark: Spurious emissions within 30-1000MHz were found more than 20dB below limit line.

LTE Band 12 / 5MHz / QPSK									
Channel	Frequency (MHz)	ERP (dBm)	Limit (dBm)	Over Limit (dB)	SPA Reading (dBm)	S.G. Power (dBm)	TX Cable loss (dB)	TX Antenna Gain (dBi)	Polarization (H/V)
Lowest	1400	-40.68	-13.00	-27.68	-48.88	-42.34	0.87	4.68	H
	2096	-40.65	-13.00	-27.65	-52.33	-41.52	1.16	4.19	H
	2800	-35.14	-13.00	-22.14	-49.98	-37.25	1.38	5.64	H
									H
									H
									H
									H
	1400	-36.46	-13.00	-23.46	-44.60	-38.12	0.87	4.68	V
	2096	-48.20	-13.00	-35.20	-59.92	-49.07	1.16	4.19	V
	2800	-38.78	-13.00	-25.78	-53.30	-40.89	1.38	5.64	V
									V
									V
									V
									V
Middle	1408	-45.16	-13.00	-32.16	-53.24	-46.87	0.87	4.73	H
	2112	-44.44	-13.00	-31.44	-56.19	-45.36	1.17	4.24	H
	2824	-36.94	-13.00	-23.94	-51.82	-39.06	1.39	5.66	H
									H
									H
									H
									H
	1408	-38.92	-13.00	-25.92	-47.11	-40.63	0.87	4.73	V
	2120	-47.71	-13.00	-34.71	-59.54	-48.65	1.17	4.26	V
	2824	-39.14	-13.00	-26.14	-53.71	-41.26	1.39	5.66	V
									V
									V
									V
									V
Highest	1424	-37.86	-13.00	-24.86	-46.28	-39.66	0.88	4.83	H
	2136	-44.76	-13.00	-31.76	-56.73	-45.74	1.18	4.31	H
	2848	-39.54	-13.00	-26.54	-54.66	-41.67	1.40	5.68	H
									H
									H
									H
									H
	1424	-38.84	-13.00	-25.84	-47.16	-40.64	0.88	4.83	V
	2136	-51.99	-13.00	-38.99	-63.97	-52.97	1.18	4.31	V
	2848	-32.74	-13.00	-19.74	-47.48	-34.87	1.40	5.68	V
									V
									V
									V
									V

Remark: Spurious emissions within 30-1000MHz were found more than 20dB below limit line.

LTE Band 12 / 10MHz / QPSK									
Channel	Frequency (MHz)	ERP (dBm)	Limit (dBm)	Over Limit (dB)	SPA Reading (dBm)	S.G. Power (dBm)	TX Cable loss (dB)	TX Antenna Gain (dBi)	Polarization (H/V)
Lowest	1400	-52.05	-13.00	-39.05	-60.36	-53.71	0.87	4.68	H
	2096	-48.30	-13.00	-35.30	-60.03	-49.17	1.16	4.19	H
	2800	-46.31	-13.00	-33.31	-61.01	-48.42	1.38	5.64	H
									H
									H
									H
									H
	1400	-47.70	-13.00	-34.70	-55.87	-49.36	0.87	4.68	V
	2096	-52.41	-13.00	-39.41	-64.12	-53.28	1.16	4.19	V
	2800	-51.24	-13.00	-38.24	-65.80	-53.35	1.38	5.64	V
									V
									V
									V
									V
Middle	1408	-41.31	-13.00	-28.31	-49.20	-43.02	0.87	4.73	H
	2112	-44.89	-13.00	-31.89	-56.63	-45.81	1.17	4.24	H
	2816	-47.65	-13.00	-34.65	-62.48	-49.76	1.39	5.65	H
									H
									H
									H
									H
	1408	-43.18	-13.00	-30.18	-51.28	-44.89	0.87	4.73	V
	2112	-42.86	-13.00	-29.86	-54.63	-43.78	1.17	4.24	V
	2816	-43.78	-13.00	-30.78	-58.44	-45.89	1.39	5.65	V
									V
									V
									V
									V
Highest	1416	-48.29	-13.00	-35.29	-56.48	-50.04	0.87	4.78	H
	2120	-46.08	-13.00	-33.08	-57.98	-47.02	1.17	4.26	H
	2824	-47.70	-13.00	-34.70	-62.60	-49.82	1.39	5.66	H
									H
									H
									H
									H
	1416	-46.83	-13.00	-33.83	-54.97	-48.58	0.87	4.78	V
	2120	-48.50	-13.00	-35.50	-60.33	-49.44	1.17	4.26	V
	2824	-39.11	-13.00	-26.11	-53.68	-41.23	1.39	5.66	V
									V
									V
									V
									V

Remark: Spurious emissions within 30-1000MHz were found more than 20dB below limit line.

LTE Band 13

LTE Band 13 / 5MHz / QPSK									
Channel	Frequency (MHz)	ERP (dBm)	Limit (dBm)	Over Limit (dB)	SPA Reading (dBm)	S.G. Power (dBm)	TX Cable loss (dB)	TX Antenna Gain (dBi)	Polarization (H/V)
Lowest	1556	-46.36	-13	-33.36	-55.74	-48.42	0.94	5.14	H
	2328	-56.17	-13	-43.17	-69.10	-57.67	1.24	4.88	H
	3112	-54.48	-13	-41.48	-70.17	-57.14	1.48	6.29	H
									H
									H
									H
									H
	1556	-50.11	-13.00	-37.11	-59.41	-52.17	0.94	5.14	V
	2328	-56.04	-13	-43.04	-68.99	-57.54	1.24	4.88	V
	3112	-54.84	-13	-41.84	-70.21	-57.50	1.48	6.29	V
									V
									V
									V
									V
Middle	1560	-46.30	-42.15	-4.15	-55.72	-48.34	0.94	5.13	H
	2344	-54.48	-13	-41.48	-67.50	-56.02	1.24	4.93	H
	3120	-54.98	-13	-41.98	-70.49	-57.67	1.49	6.33	H
									H
									H
									H
									H
	1560	-50.92	-42.15	-8.77	-60.17	-52.96	0.94	5.13	V
	2344	-53.92	-13	-40.92	-66.97	-55.46	1.24	4.93	V
	3120	-55.18	-13	-42.18	-70.44	-57.87	1.49	6.33	V
									V
									V
									V
Highest	1568	-46.06	-42.15	-3.91	-55.50	-48.08	0.94	5.11	H
	2352	-55.93	-13	-42.93	-68.02	-57.49	1.24	4.96	H
	3136	-54.47	-13	-41.47	-70.21	-57.23	1.49	6.40	H
									H
									H
									H
									H
	1568	-48.99	-42.15	-6.84	-58.25	-51.01	0.94	5.11	V
	2352	-55.13	-13	-42.13	-68.28	-56.69	1.24	4.96	V
	3136	-54.27	-13	-41.27	-69.70	-57.03	1.49	6.40	V
									V
									V
									V

Remark: Spurious emissions within 30-1000MHz were found more than 20dB below limit line.

LTE Band 13 / 10MHz / QPSK									
Channel	Frequency (MHz)	ERP (dBm)	Limit (dBm)	Over Limit (dB)	SPA Reading (dBm)	S.G. Power (dBm)	TX Cable loss (dB)	TX Antenna Gain (dBi)	Polarization (H/V)
Middle	1560	-48.57	-42.15	-6.42	-57.92	-50.61	0.94	5.13	H
	2344	-54.28	-13	-41.28	-67.39	-55.82	1.24	4.93	H
	3120	-53.08	-13	-40.08	-68.93	-55.77	1.49	6.33	H
									H
									H
									H
									H
	1560	-52.33	-42.15	-10.18	-61.61	-54.37	0.94	5.13	V
	2344	-55.04	-13	-42.04	-68.23	-56.58	1.24	4.93	V
	3120	-54.35	-13	-41.35	-69.79	-57.04	1.49	6.33	V
									V
									V
									V
									V

Remark: Spurious emissions within 30-1000MHz were found more than 20dB below limit line.

LTE Band 41

LTE Band 41 / 5MHz / QPSK									
Channel	Frequency (MHz)	EIRP (dBm)	Limit (dBm)	Over Limit (dB)	SPA Reading (dBm)	S.G. Power (dBm)	TX Cable loss (dB)	TX Antenna Gain (dBi)	Polarization (H/V)
Lowest	4992	-40.39	-25	-15.39	-61.34	-47.74	2.33	9.68	H
	7488	-43.67	-25	-18.67	-70.88	-53.01	2.43	11.78	H
	9990	-41.38	-25	-16.38	-72.94	-50.89	2.69	12.21	H
									H
									H
									H
									H
	4992	-39.70	-25	-14.70	-61.02	-47.05	2.33	9.68	V
	7488	-43.53	-25	-18.53	-70.96	-52.87	2.43	11.78	V
	9990	-42.64	-25	-17.64	-73.63	-52.15	2.69	12.21	V
									V
									V
									V
									V
Middle	5184	-39.12	-25	-14.12	-60.75	-46.38	2.44	9.70	H
	7772	-43.64	-25	-18.64	-71.18	-53.26	2.34	11.96	H
	10362	-41.53	-25	-16.53	-73.63	-51.18	2.69	12.34	H
									H
									H
									H
									H
	5184	-38.07	-25	-13.07	-59.78	-45.33	2.44	9.70	V
	7772	-43.24	-25	-18.24	-70.82	-52.86	2.34	11.96	V
	10362	-42.99	-25	-17.99	-74.29	-52.64	2.69	12.34	V
									V
									V
									V
Highest	5370	-42.04	-25	-17.04	-64.2	-49.19	2.55	9.70	H
	8052	-42.26	-25	-17.26	-70.22	-52.12	2.28	12.14	H
	10746	-40.35	-25	-15.35	-72.46	-50.11	2.69	12.45	H
									H
									H
									H
									H
	5370	-38.60	-25	-13.60	-60.79	-45.75	2.55	9.70	V
	8052	-42.38	-25	-17.38	-70.19	-52.24	2.28	12.14	V
	10746	-41.06	-25	-16.06	-72.81	-50.82	2.69	12.45	V
									V
									V
									V

Remark: Spurious emissions within 30-1000MHz were found more than 20dB below limit line.

LTE Band 41 / 10MHz / QPSK									
Channel	Frequency (MHz)	EIRP (dBm)	Limit (dBm)	Over Limit (dB)	SPA Reading (dBm)	S.G. Power (dBm)	TX Cable loss (dB)	TX Antenna Gain (dBi)	Polarization (H/V)
Lowest	4992	-37.54	-25	-12.54	-58.63	-44.89	2.33	9.68	H
	7488	-43.32	-25	-18.32	-70.52	-52.66	2.43	11.78	H
	9990	-41.96	-25	-16.96	-73.53	-51.47	2.69	12.21	H
									H
									H
									H
									H
	4992	-37.86	-25	-12.86	-59.28	-45.21	2.33	9.68	V
	7488	-42.66	-25	-17.66	-69.97	-52	2.43	11.78	V
	9990	-42.98	-25	-17.98	-73.88	-52.49	2.69	12.21	V
									V
									V
									V
									V
Middle	5178	-38.64	-25	-13.64	-60.27	-45.9	2.44	9.70	H
	7764	-43.16	-25	-18.16	-70.7	-52.77	2.34	11.96	H
	10352	-42.08	-25	-17.08	-74.15	-51.73	2.69	12.34	H
									H
									H
									H
									H
	5178	-38.00	-25	-13.00	-59.71	-45.26	2.44	9.70	V
	7764	-43.56	-25	-18.56	-71.14	-53.17	2.34	11.96	V
	10352	-42.81	-25	-17.81	-74.09	-52.46	2.69	12.34	V
									V
									V
									V
									V
Highest	5364	-40.36	-25	-15.36	-62.39	-47.51	2.55	9.70	H
	8040	-42.28	-25	-17.28	-70.1	-52.14	2.28	12.13	H
	10720	-41.13	-25	-16.13	-73.15	-50.88	2.69	12.44	H
									H
									H
									H
									H
	5364	-39.17	-25	-14.17	-61.37	-46.32	2.55	9.70	V
	8040	-42.09	-25	-17.09	-69.84	-51.95	2.28	12.13	V
	10720	-41.79	-25	-16.79	-73.43	-51.54	2.69	12.44	V
									V
									V
									V
									V

Remark: Spurious emissions within 30-1000MHz were found more than 20dB below limit line.

LTE Band 41 / 15MHz / QPSK									
Channel	Frequency (MHz)	EIRP (dBm)	Limit (dBm)	Over Limit (dB)	SPA Reading (dBm)	S.G. Power (dBm)	TX Cable loss (dB)	TX Antenna Gain (dBi)	Polarization (H/V)
Lowest	4992	-40.23	-25	-15.23	-61.2	-47.58	2.33	9.68	H
	7488	-42.71	-25	-17.71	-69.96	-52.05	2.43	11.78	H
	9990	-41.85	-25	-16.85	-73.38	-51.36	2.69	12.21	H
									H
									H
									H
									H
	4992	-36.11	-25	-11.11	-57.51	-43.46	2.33	9.68	V
	7488	-43.10	-25	-18.10	-70.57	-52.44	2.43	11.78	V
	9990	-43.07	-25	-18.07	-74.1	-52.58	2.69	12.21	V
									V
									V
									V
									V
Middle	5172	-38.44	-25	-13.44	-60.02	-45.7	2.44	9.70	H
	7758	-42.56	-25	-17.56	-70.1	-52.17	2.35	11.95	H
	10350	-40.85	-25	-15.85	-72.92	-50.5	2.69	12.34	H
									H
									H
									H
									H
	5172	-37.78	-25	-12.78	-59.45	-45.04	2.44	9.70	V
	7758	-42.62	-25	-17.62	-70.2	-52.23	2.35	11.95	V
	10350	-42.21	-25	-17.21	-73.49	-51.86	2.69	12.34	V
									V
									V
									V
									V
Highest	5352	-38.30	-25	-13.30	-60.31	-45.46	2.54	9.70	H
	8028	-42.76	-25	-17.76	-70.63	-52.61	2.27	12.12	H
	10692	-41.13	-25	-16.13	-73.18	-50.88	2.69	12.44	H
									H
									H
									H
									H
	5352	-38.03	-25	-13.03	-60.08	-45.19	2.54	9.70	V
	8028	-42.14	-25	-17.14	-69.83	-51.99	2.27	12.12	V
	10692	-41.77	-25	-16.77	-73.44	-51.52	2.69	12.44	V
									V
									V
									V
									V

Remark: Spurious emissions within 30-1000MHz were found more than 20dB below limit line.

LTE Band 41 / 20MHz / QPSK									
Channel	Frequency (MHz)	EIRP (dBm)	Limit (dBm)	Over Limit (dB)	SPA Reading (dBm)	S.G. Power (dBm)	TX Cable loss (dB)	TX Antenna Gain (dBi)	Polarization (H/V)
Lowest	4992	-38.65	-25	-13.65	-59.73	-46	2.33	9.68	H
	7488	-42.79	-25	-17.79	-70.06	-52.13	2.43	11.78	H
	9990	-41.91	-25	-16.91	-73.5	-51.42	2.69	12.21	H
									H
									H
									H
									H
	4992	-39.14	-25	-14.14	-60.51	-46.49	2.33	9.68	V
	7488	-43.72	-25	-18.72	-71.12	-53.06	2.43	11.78	V
	9990	-43.53	-25	-18.53	-74.58	-53.04	2.69	12.21	V
									V
									V
									V
									V
Middle	5166	-39.46	-25	-14.46	-61.08	-46.73	2.43	9.70	H
	7752	-42.59	-25	-17.59	-70.11	-52.19	2.35	11.95	H
	10332	-41.47	-25	-16.47	-73.52	-51.11	2.69	12.33	H
									H
									H
									H
									H
	5166	-38.34	-25	-13.34	-59.9	-45.61	2.43	9.70	V
	7752	-43.08	-25	-18.08	-70.75	-52.68	2.35	11.95	V
	10332	-42.54	-25	-17.54	-73.82	-52.18	2.69	12.33	V
									V
									V
									V
									V
Highest	5340	-41.39	-25	-16.39	-63.37	-48.56	2.53	9.70	H
	8010	-42.85	-25	-17.85	-70.59	-52.69	2.27	12.11	H
	10674	-40.84	-25	-15.84	-73	-50.58	2.69	12.43	H
									H
									H
									H
									H
	5340	-38.45	-25	-13.45	-60.55	-45.62	2.53	9.70	V
	8010	-42.73	-25	-17.73	-70.53	-52.57	2.27	12.11	V
	10674	-41.95	-25	-16.95	-73.54	-51.69	2.69	12.43	V
									V
									V
									V
									V

Remark: Spurious emissions within 30-1000MHz were found more than 20dB below limit line.