#01_WCDMA II_RMC 12.2Kbps_Edge 1_0mm_Ch9538

Communication System: WCDMA ; Frequency: 1907.6 MHz;Duty Cycle: 1:1
Medium: MSL_1900_151120 Medium parameters used: f = 1908 MHz; σ = 1.523 S/m; ε_r = 54.64; ρ = 1000 kg/m^3
Ambient Temperature：23.5 ℃; Liquid Temperature：22.5 ℃

DASY5 Configuration
- Probe: EX3DV4 - SN3578; ConvF(7.28, 7.28, 7.28); Calibrated: 2015/3/31;
- Sensor-Surface: 1.4mm (Mechanical Surface Detection)
- Electronics: DAE4 Sn915; Calibrated: 2015/6/11
- Phantom: ELI v5.0; Type: QDOVA002AA; Serial: TP:1227
- Measurement SW: DASY52, Version 52.8 (8); SEMCAD X Version 14.6.10 (7331)

Configuration/Ch9538/Area Scan (51x121x1): Interpolated grid: dx=1.500 mm, dy=1.500 mm
Maximum value of SAR (interpolated) = 1.28 W/kg

Configuration/Ch9538/Zoom Scan (5x5x7)/Cube 0: Measurement grid: dx=8mm, dy=8mm, dz=5mm
Reference Value = 29.75 V/m; Power Drift = 0.19 dB
Peak SAR (extrapolated) = 1.66 W/kg
SAR(1 g) = 0.758 W/kg; SAR(10 g) = 0.331 W/kg
Maximum value of SAR (measured) = 1.41 W/kg

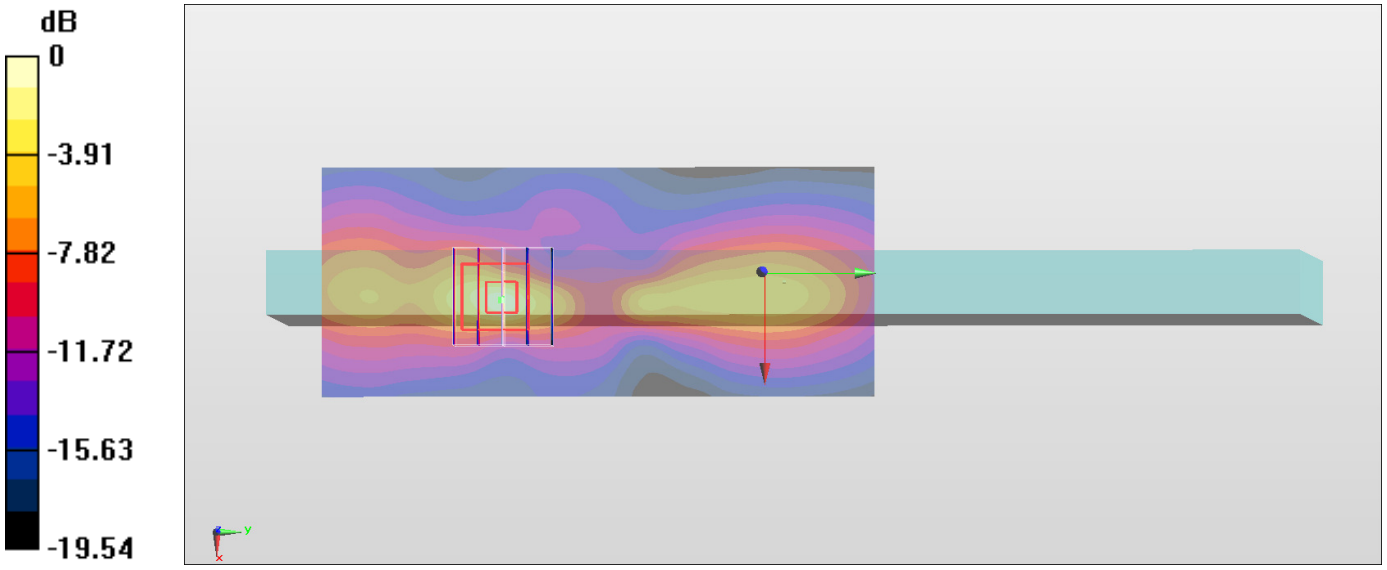

0 dB = 1.41 W/kg = 1.49 dBW/kg

#02_WCDMA IV_RMC 12.2Kbps_Edge 1_0mm_Ch1513

Communication System: WCDMA ; Frequency: 1752.6 MHz;Duty Cycle: 1:1
Medium: MSL_1750_151124 Medium parameters used: f = 1753 MHz; σ = 1.483 S/m; ε_r = 55.228; ρ = 1000 kg/m^3
Ambient Temperature：23.5 ℃; Liquid Temperature：22.5 ℃

DASY5 Configuration
- Probe: EX3DV4 - SN3578; ConvF(7.65, 7.65, 7.65); Calibrated: 2015/3/31;
- Sensor-Surface: 1.4mm (Mechanical Surface Detection)
- Electronics: DAE4 Sn915; Calibrated: 2015/6/11
- Phantom: ELI v5.0; Type: QDOVA002AA; Serial: TP:1227
- Measurement SW: DASY52, Version 52.8 (8); SEMCAD X Version 14.6.10 (7331)

Configuration/Ch1513/Area Scan (51x131x1): Interpolated grid: dx=1.500 mm, dy=1.500 mm
Maximum value of SAR (interpolated) = 1.13 W/kg

Configuration/Ch1513/Zoom Scan (5x5x7)/Cube 0: Measurement grid: dx=8mm, dy=8mm, dz=5mm
Reference Value = 23.31 V/m; Power Drift = 0.11 dB
Peak SAR (extrapolated) = 1.74 W/kg
SAR(1 g) = 0.894 W/kg; SAR(10 g) = 0.459 W/kg
Maximum value of SAR (measured) = 1.38 W/kg

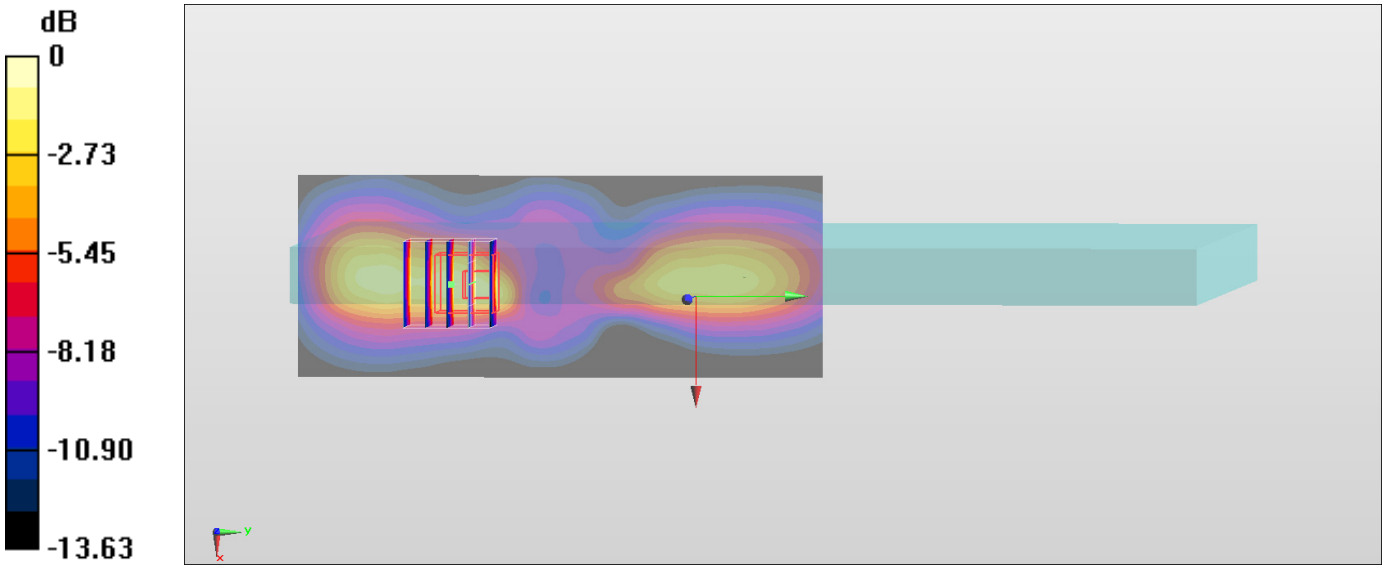

0 dB = 1.38 W/kg = 1.40 dBW/kg

#03_WCDMA V_RMC 12.2Kbps_Edge 1_0mm_Ch4233

Communication System: WCDMA ; Frequency: 846.6 MHz;Duty Cycle: 1:1
Medium: MSL_850_151125 Medium parameters used: f = 847 MHz; σ = 0.998 S/m; ε_r = 56.782; ρ = 1000 kg/m^3
Ambient Temperature：23.5 ℃; Liquid Temperature：22.5 ℃

DASY5 Configuration
- Probe: EX3DV4 - SN3578; ConvF(9.27, 9.27, 9.27); Calibrated: 2015/3/31;
- Sensor-Surface: 1.4mm (Mechanical Surface Detection)
- Electronics: DAE4 Sn915; Calibrated: 2015/6/11
- Phantom: ELI v5.0; Type: QDOVA002AA; Serial: TP:1227
- Measurement SW: DASY52, Version 52.8 (8); SEMCAD X Version 14.6.10 (7331)

Configuration/Ch4233/Area Scan (51x121x1): Interpolated grid: dx=1.500 mm, dy=1.500 mm
Maximum value of SAR (interpolated) = 1.55 W/kg

Configuration/Ch4233/Zoom Scan (5x5x7)/Cube 0: Measurement grid: dx=8mm, dy=8mm, dz=5mm
Reference Value = 40.86 V/m; Power Drift = -0.05 dB
Peak SAR (extrapolated) = 1.93 W/kg
SAR(1 g) = 0.934 W/kg; SAR(10 g) = 0.474 W/kg
Maximum value of SAR (measured) = 1.60 W/kg

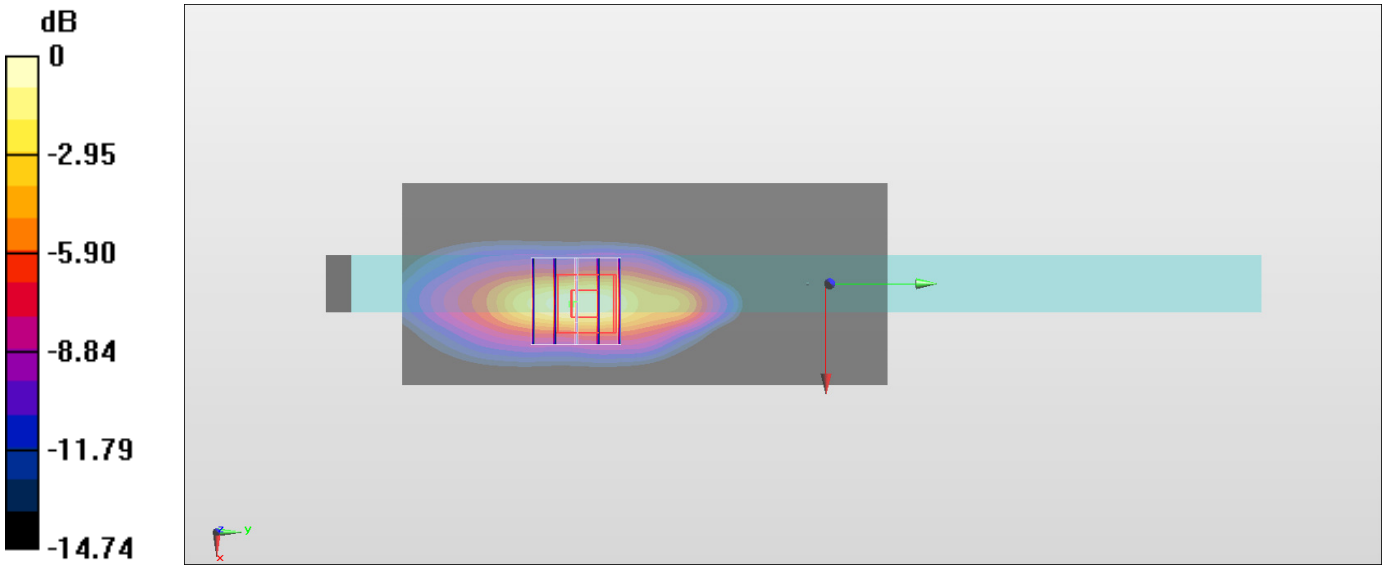

0 dB = 1.60 W/kg = 2.04 dBW/kg

#04_LTE Band 4_20M_QPSK_1_0_Edge 1_0mm_Ch20175

Communication System: LTE ; Frequency: 1732.5 MHz;Duty Cycle: 1:1
Medium: MSL_1750_151124 Medium parameters used : f = 1732.5 MHz; σ = 1.462 S/m; ε_r = 55.27; ρ = 1000 kg/m^3
Ambient Temperature：23.5 ℃; Liquid Temperature：22.5 ℃

DASY5 Configuration
- Probe: EX3DV4 - SN3578; ConvF(7.65, 7.65, 7.65); Calibrated: 2015/3/31;
- Sensor-Surface: 1.4mm (Mechanical Surface Detection)
- Electronics: DAE4 Sn915; Calibrated: 2015/6/11
- Phantom: ELI v5.0; Type: QDOVA002AA; Serial: TP:1227
- Measurement SW: DASY52, Version 52.8 (8); SEMCAD X Version 14.6.10 (7331)

Configuration/Ch20175/Area Scan (51x121x1): Interpolated grid: dx=1.500 mm, dy=1.500 mm
Maximum value of SAR (interpolated) = 1.29 W/kg

Configuration/Ch20175/Zoom Scan (5x5x7)/Cube 0: Measurement grid: dx=8mm, dy=8mm, dz=5mm
Reference Value = 27.86 V/m; Power Drift = 0.10 dB
Peak SAR (extrapolated) = 1.95 W/kg
SAR(1 g) = 0.931 W/kg; SAR(10 g) = 0.489 W/kg
Maximum value of SAR (measured) = 1.64 W/kg

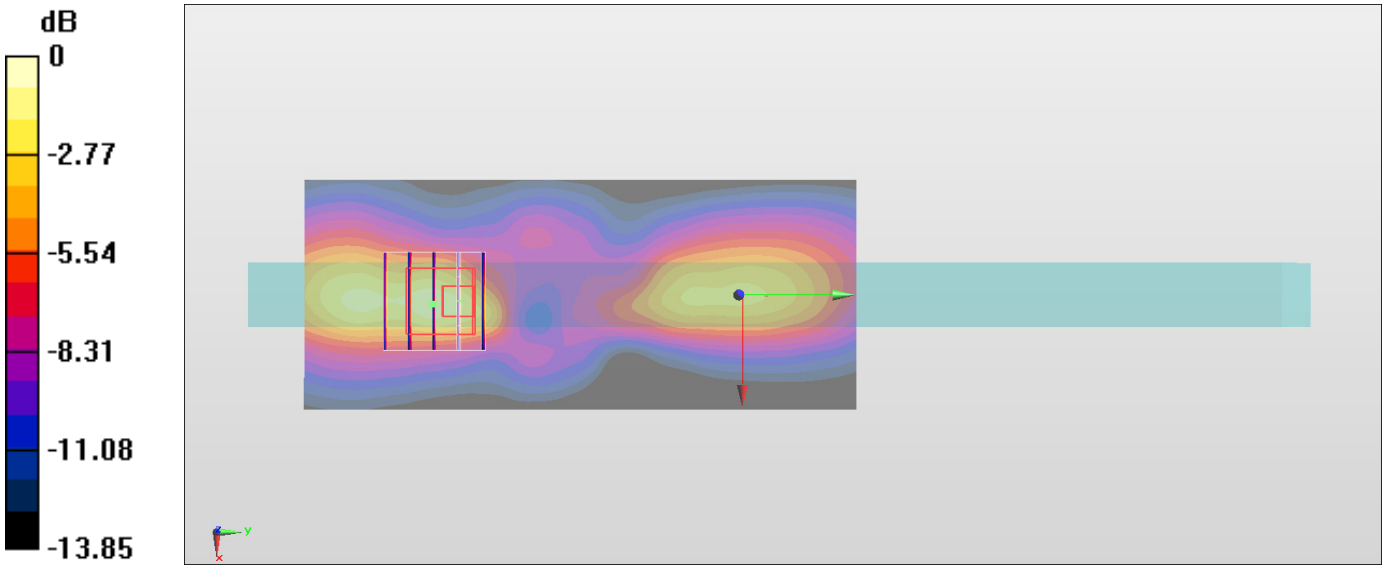

0 dB = 1.64 W/kg = 2.15 dBW/kg

#05_LTE Band 7_20M_QPSK_1_0_Edge 1_0mm_Ch21350

Communication System: LTE ; Frequency: 2560 MHz;Duty Cycle: 1:1
Medium: MSL_2600_151121 Medium parameters used: f = 2560 MHz; σ = 2.115 S/m; ε_r = 50.82; ρ = 1000 kg/m^3
Ambient Temperature：23.4 ℃; Liquid Temperature：22.4 ℃

DASY5 Configuration
- Probe: EX3DV4 - SN3578; ConvF(6.69, 6.69, 6.69); Calibrated: 2015/3/31;
- Sensor-Surface: 1.4mm (Mechanical Surface Detection)
- Electronics: DAE4 Sn915; Calibrated: 2015/6/11
- Phantom: ELI v5.0; Type: QDOVA002AA; Serial: TP:1227
- Measurement SW: DASY52, Version 52.8 (8); SEMCAD X Version 14.6.10 (7331)

Configuration/Ch21350/Area Scan (61x151x1): Interpolated grid: dx=1.200 mm, dy=1.200 mm
Maximum value of SAR (interpolated) = 1.46 W/kg

Configuration/Ch21350/Zoom Scan (7x7x7)/Cube 0: Measurement grid: dx=5mm, dy=5mm, dz=5mm
Reference Value = 26.81 V/m; Power Drift = -0.14 dB
Peak SAR (extrapolated) = 1.96 W/kg
SAR(1 g) = 0.717 W/kg; SAR(10 g) = 0.261 W/kg
Maximum value of SAR (measured) = 1.46 W/kg

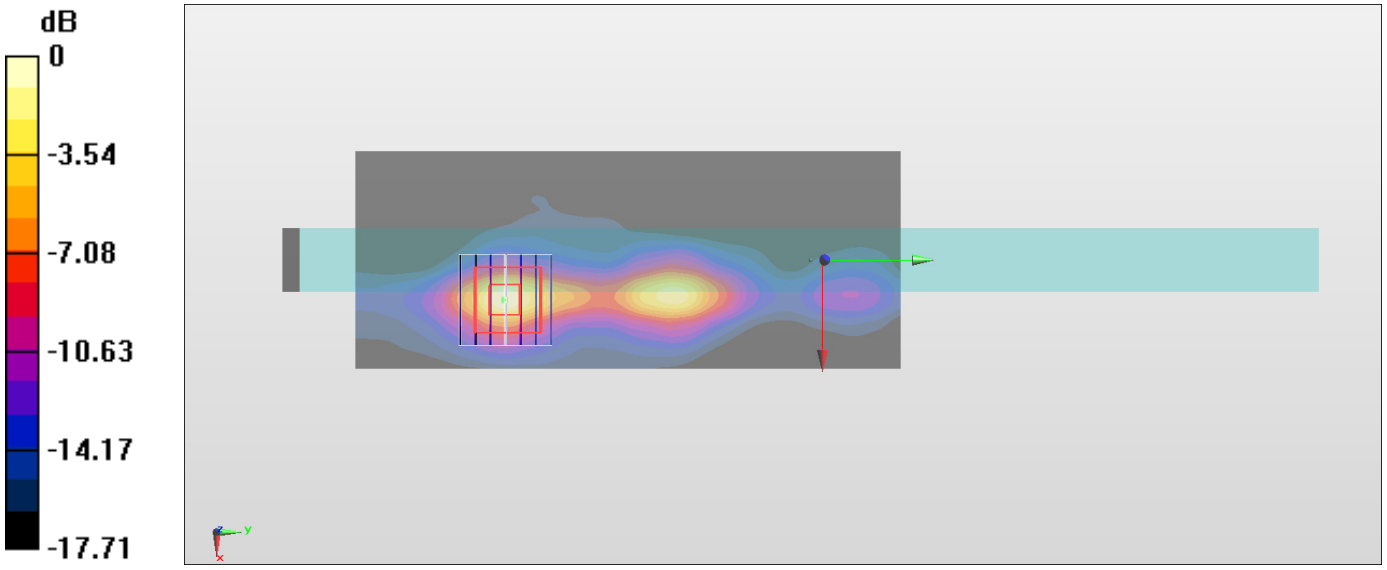

0 dB = 1.46 W/kg = 1.64 dBW/kg

#06_LTE Band 12_10M_QPSK_25_0_Edge 1_0mm_Ch23095

Communication System: LTE ; Frequency: 707.5 MHz;Duty Cycle: 1:1
Medium: MSL_750_151125 Medium parameters used : f = 707.5 MHz; σ = 0.937 S/m; ε_r = 54.638; ρ = 1000 kg/m^3
Ambient Temperature：23.9 ℃; Liquid Temperature：22.9 ℃

DASY5 Configuration
- Probe: EX3DV4 - SN3578; ConvF(9.29, 9.29, 9.29); Calibrated: 2015/3/31;
- Sensor-Surface: 1.4mm (Mechanical Surface Detection)
- Electronics: DAE4 Sn915; Calibrated: 2015/6/11
- Phantom: ELI v5.0; Type: QDOVA002AA; Serial: TP:1227
- Measurement SW: DASY52, Version 52.8 (8); SEMCAD X Version 14.6.10 (7331)

Configuration/Ch23095/Area Scan (51x121x1): Interpolated grid: dx=1.500 mm, dy=1.500 mm
Maximum value of SAR (interpolated) = 1.44 W/kg

Configuration/Ch23095/Zoom Scan (5x5x7)/Cube 0: Measurement grid: dx=8mm, dy=8mm, dz=5mm
Reference Value = 40.49 V/m; Power Drift = -0.02 dB
Peak SAR (extrapolated) = 1.76 W/kg
SAR(1 g) = 0.896 W/kg; SAR(10 g) = 0.496 W/kg
Maximum value of SAR (measured) = 1.47 W/kg

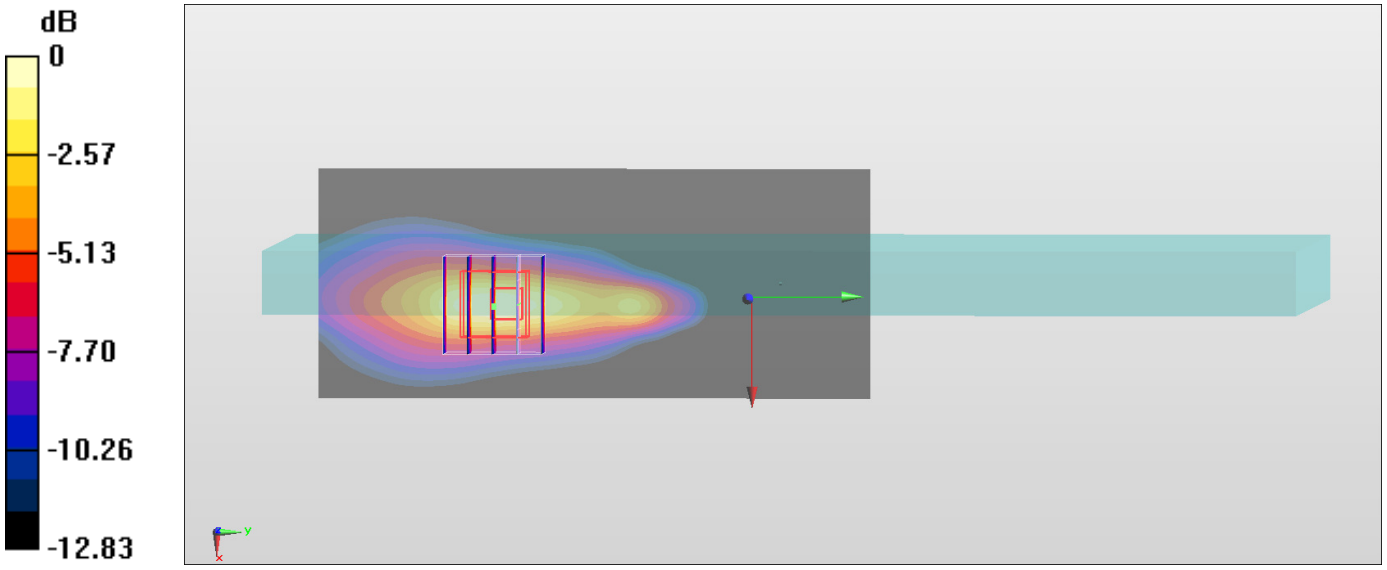

0 dB = 1.47 W/kg = 1.67 dBW/kg

#07_LTE Band 13_10M_QPSK_50_0_Edge 1_0mm_Ch23230

Communication System: LTE ; Frequency: 782 MHz;Duty Cycle: 1:1
Medium: MSL_750_151125 Medium parameters used: f = 782 MHz; σ = 1.007 S/m; ε_r = 53.885; ρ = 1000 kg/m^3
Ambient Temperature：23.9 ℃; Liquid Temperature：22.9 ℃

DASY5 Configuration
- Probe: EX3DV4 - SN3578; ConvF(9.29, 9.29, 9.29); Calibrated: 2015/3/31;
- Sensor-Surface: 1.4mm (Mechanical Surface Detection)
- Electronics: DAE4 Sn915; Calibrated: 2015/6/11
- Phantom: ELI v5.0; Type: QDOVA002AA; Serial: TP:1227
- Measurement SW: DASY52, Version 52.8 (8); SEMCAD X Version 14.6.10 (7331)

Configuration/Ch23230/Area Scan (51x121x1): Interpolated grid: dx=1.500 mm, dy=1.500 mm
Maximum value of SAR (interpolated) = 1.62 W/kg

Configuration/Ch23230/Zoom Scan (5x5x7)/Cube 0: Measurement grid: dx=8mm, dy=8mm, dz=5mm
Reference Value = 41.85 V/m; Power Drift = -0.03 dB
Peak SAR (extrapolated) = 2.06 W/kg
SAR(1 g) = 1 W/kg; SAR(10 g) = 0.521 W/kg
Maximum value of SAR (measured) = 1.70 W/kg

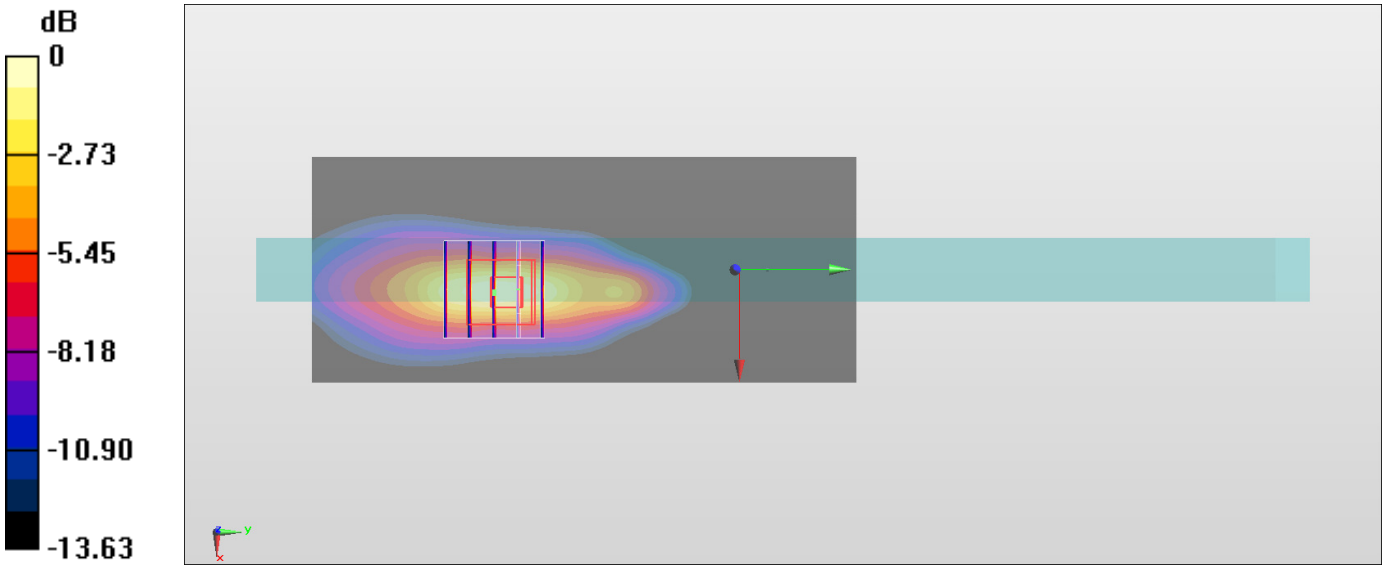

0 dB = 1.70 W/kg = 2.30 dBW/kg

#08_LTE Band 25_20M_QPSK_50_0_Edge 1_0mm_Ch26590

Communication System: LTE; Frequency: 1905 MHz;Duty Cycle: 1:1
Medium: MSL_1900_151124 Medium parameters used: f = 1905 MHz; σ = 1.529 S/m; ε_r = 54.846; ρ = 1000 kg/m^3
Ambient Temperature：23.3 ℃; Liquid Temperature：22.3 ℃

DASY5 Configuration
- Probe: ES3DV3 - SN3270; ConvF(4.78, 4.78, 4.78); Calibrated: 2015/9/28;
- Sensor-Surface: 2mm (Mechanical Surface Detection)
- Electronics: DAE4 Sn778; Calibrated: 2015/8/25
- Phantom: ELI v5.0; Type: QDOVA002AA; Serial: TP:1227
- Measurement SW: DASY52, Version 52.8 (8); SEMCAD X Version 14.6.10 (7331)

Configuration/Ch26590/Area Scan (51x121x1): Interpolated grid: dx=1.500 mm, dy=1.500 mm
Maximum value of SAR (interpolated) = 1.62 W/kg

Configuration/Ch26590/Zoom Scan (5x5x7)/Cube 0: Measurement grid: dx=8mm, dy=8mm, dz=5mm
Reference Value = 35.26 V/m; Power Drift = -0.05 dB
Peak SAR (extrapolated) = 2.11 W/kg
SAR(1 g) = 0.894 W/kg; SAR(10 g) = 0.384 W/kg
Maximum value of SAR (measured) = 1.51 W/kg

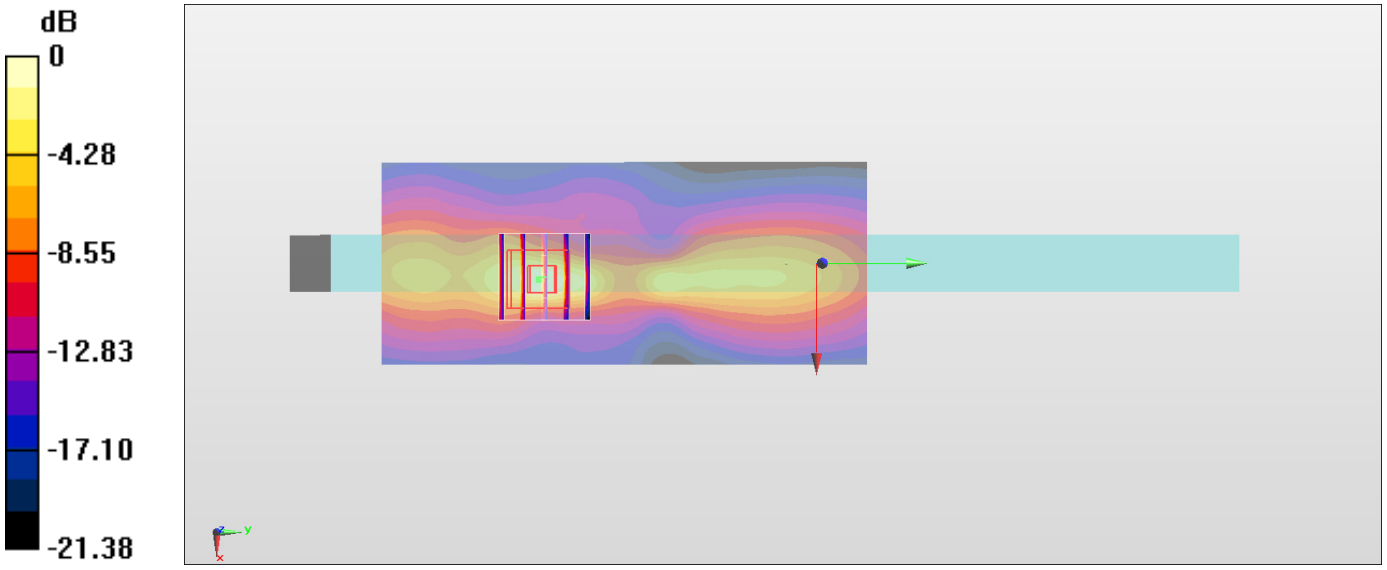

0 dB = 1.51 W/kg = 1.79 dBW/kg

#09_LTE Band 26_15M_QPSK_36_0_Edge 1_0mm_Ch26865

Communication System: LTE ; Frequency: 831.5 MHz;Duty Cycle: 1:1
Medium: MSL_850_151125 Medium parameters used : f = 831.5 MHz; σ = 0.983 S/m; ε_r = 56.922; ρ = 1000 kg/m^3
Ambient Temperature：23.5 ℃; Liquid Temperature：22.5 ℃

DASY5 Configuration
- Probe: EX3DV4 - SN3578; ConvF(9.27, 9.27, 9.27); Calibrated: 2015/3/31;
- Sensor-Surface: 1.4mm (Mechanical Surface Detection)
- Electronics: DAE4 Sn915; Calibrated: 2015/6/11
- Phantom: ELI v5.0; Type: QDOVA002AA; Serial: TP:1227
- Measurement SW: DASY52, Version 52.8 (8); SEMCAD X Version 14.6.10 (7331)

Configuration/Ch26865/Area Scan (51x121x1): Interpolated grid: dx=1.500 mm, dy=1.500 mm
Maximum value of SAR (interpolated) = 1.50 W/kg

Configuration/Ch26865/Zoom Scan (5x5x7)/Cube 0: Measurement grid: dx=8mm, dy=8mm, dz=5mm
Reference Value = 40.36 V/m; Power Drift = -0.02 dB
Peak SAR (extrapolated) = 1.88 W/kg
SAR(1 g) = 0.907 W/kg; SAR(10 g) = 0.462 W/kg
Maximum value of SAR (measured) = 1.55 W/kg

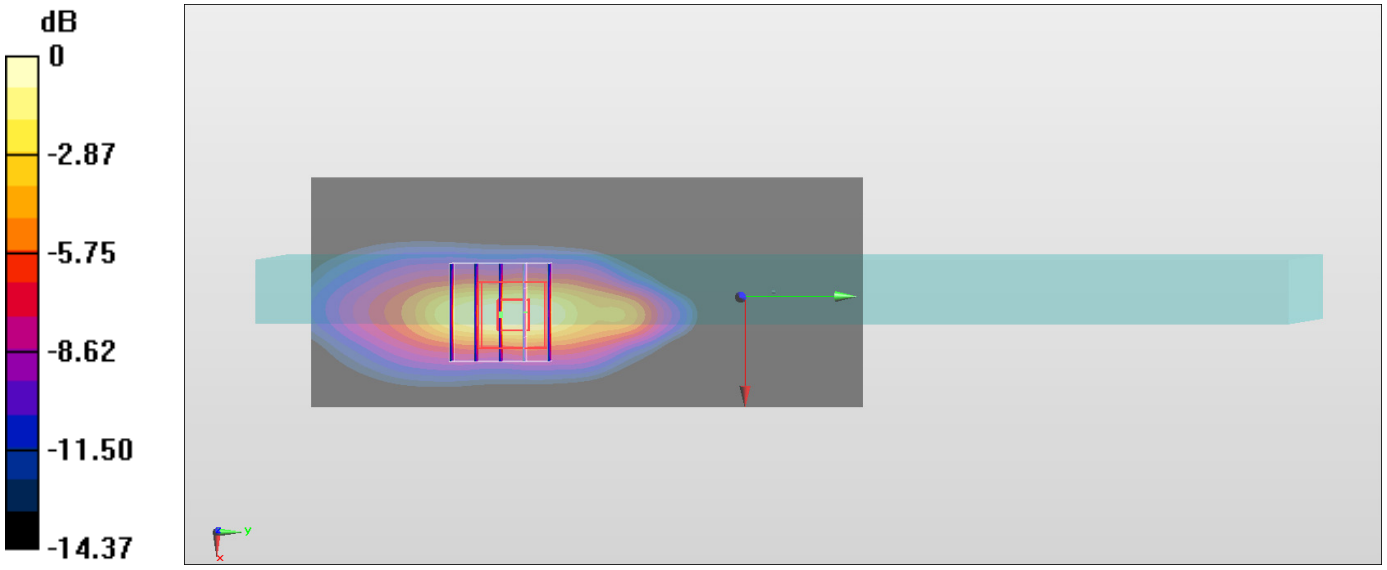

0 dB = 1.55 W/kg = 1.90 dBW/kg

#10_LTE Band 41_20M_QPSK_1_0_Edge 1_0mm_Ch41490

Communication System: LTE-TDD ; Frequency: 2680 MHz;Duty Cycle: 1:1.59
Medium: MSL_2600_151124 Medium parameters used: f = 2680 MHz; σ = 2.301 S/m; ε_r = 52.541; ρ = 1000 kg/m^3
Ambient Temperature：22.3 ℃; Liquid Temperature：22.3 ℃

DASY5 Configuration
- Probe: ES3DV3 - SN3270; ConvF(4.27, 4.27, 4.27); Calibrated: 2015/9/28;
- Sensor-Surface: 2mm (Mechanical Surface Detection)
- Electronics: DAE4 Sn778; Calibrated: 2015/8/25
- Phantom: ELI v5.0; Type: QDOVA002AA; Serial: TP:1227
- Measurement SW: DASY52, Version 52.8 (8); SEMCAD X Version 14.6.10 (7331)

Configuration/Ch41490/Area Scan (61x151x1): Interpolated grid: dx=1.200 mm, dy=1.200 mm
Maximum value of SAR (interpolated) = 1.34 W/kg

Configuration/Ch41490/Zoom Scan (7x7x7)/Cube 0: Measurement grid: dx=5mm, dy=5mm, dz=5mm
Reference Value = 6.981 V/m; Power Drift = -0.18 dB
Peak SAR (extrapolated) = 1.79 W/kg
SAR(1 g) = 0.697 W/kg; SAR(10 g) = 0.257 W/kg
Maximum value of SAR (measured) = 1.24 W/kg

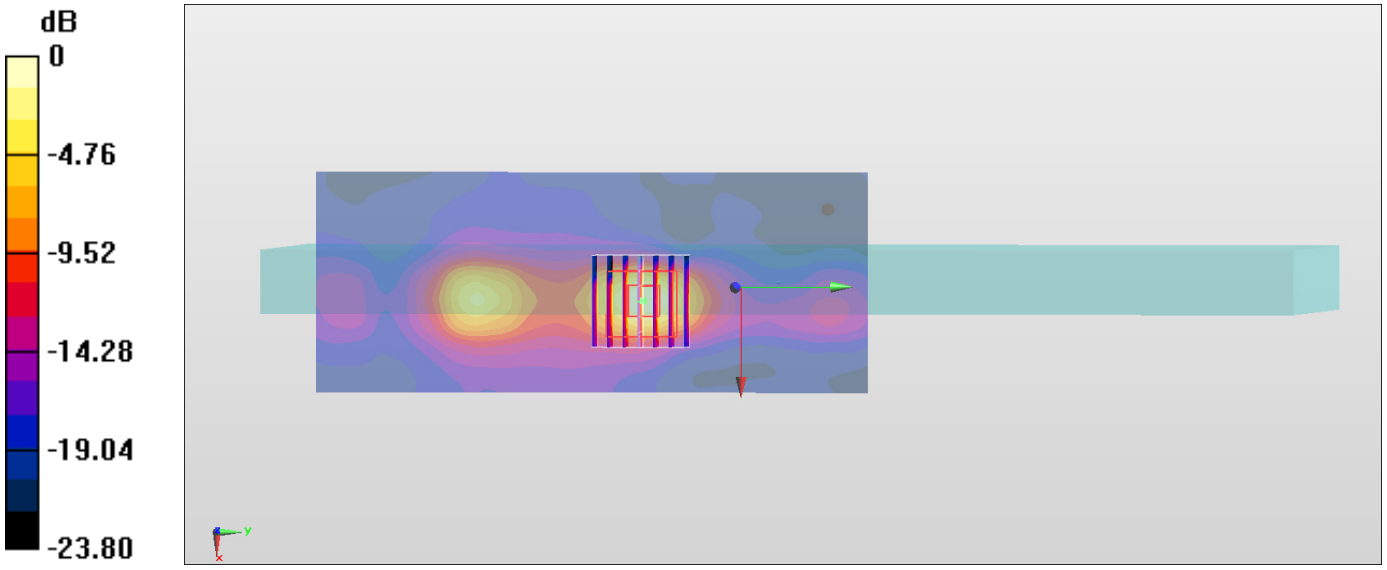

0 dB = 1.24 W/kg = 0.93 dBW/kg