System Check_Head_2450MHz

DUT: D2450V2-736

Communication System: CW; Frequency: 2450 MHz;Duty Cycle: 1:1
Medium: HSL_2450_201022 Medium parameters used : f = 2450 MHz; σ = 1.818 S/m; ε_r = 39.954; ρ = 1000 kg/m^3
Ambient Temperature：23.6 ℃; Liquid Temperature：22.6 ℃

DASY5 Configuration:
- Probe: ES3DV3 - SN3169; ConvF(4.52, 4.52, 4.52) @ 2450 MHz; Calibrated: 2020/5/27
- Sensor-Surface: 3mm (Mechanical Surface Detection)
- Electronics: DAE4 Sn699; Calibrated: 2020/2/26
- Phantom: ELI v4.0; Type: QDOVA002AA; Serial: TP:1238
- Measurement SW: DASY52, Version 52.10 (4);SEMCAD X Version 14.6.14 (7483)

Pin=250mW/Area Scan (61x61x1): Interpolated grid: dx=1.200 mm, dy=1.200 mm
Maximum value of SAR (interpolated) = 17.6 W/kg

Pin=250mW/Zoom Scan (7x7x7)/Cube 0: Measurement grid: dx=5mm, dy=5mm, dz=5mm
Reference Value = 102.3 V/m; Power Drift = -0.03 dB
Peak SAR (extrapolated) = 27.0 W/kg
SAR(1 g) = 13.3 W/kg; SAR(10 g) = 6.17 W/kg
Maximum value of SAR (measured) = 17.4 W/kg

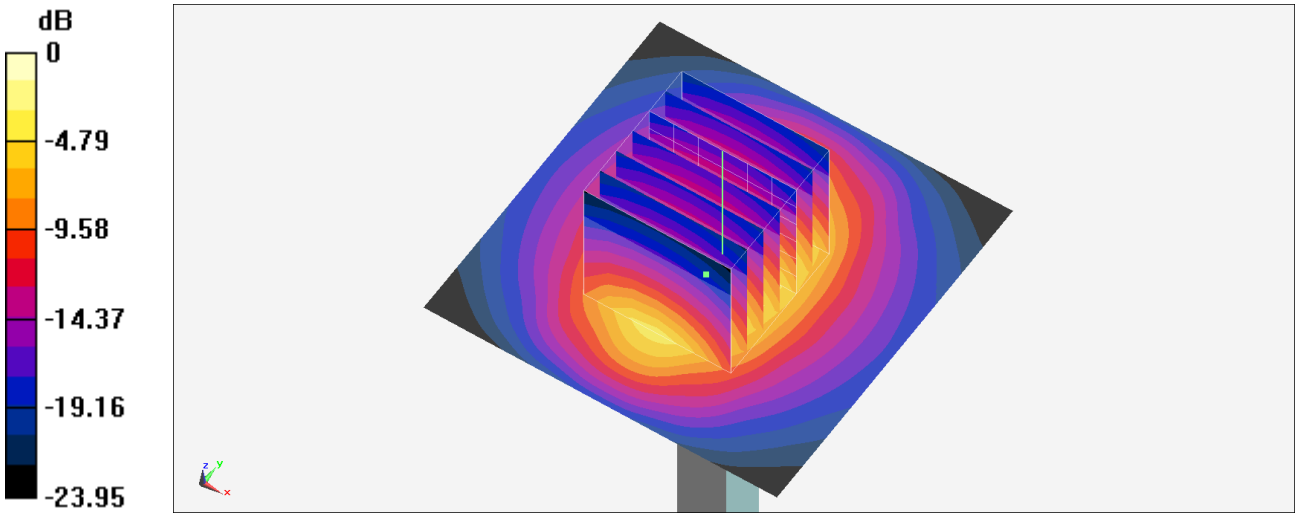

0 dB = 17.4 W/kg = 12.41 dBW/kg

Test Laboratory: Sporton International Inc. SAR/HAC Testing Lab Date: 2020/10/25

System Check_Head_2450MHz

DUT: D2450V2-736

Communication System: CW; Frequency: 2450 MHz;Duty Cycle: 1:1
Medium: HSL_2450_201025 Medium parameters used : f = 2450 MHz; σ = 1.781 S/m; ε_r = 39.951; ρ = 1000 kg/m^3
Ambient Temperature：23.3 ℃; Liquid Temperature：22.3 ℃

DASY5 Configuration:
- Probe: ES3DV3 - SN3184; ConvF(4.61, 4.61, 4.61) @ 2450 MHz; Calibrated: 2020/9/23
- Sensor-Surface: 3mm (Mechanical Surface Detection)
- Electronics: DAE4 Sn916; Calibrated: 2019/12/17
- Phantom: ELI v4.0; Type: QDOVA001BB; Serial: TP:1164
- Measurement SW: DASY52, Version 52.10 (4);SEMCAD X Version 14.6.14 (7483)

Pin=250mW/Area Scan (81x81x1): Interpolated grid: dx=1.200 mm, dy=1.200 mm
Maximum value of SAR (interpolated) = 17.5 W/kg

Pin=250mW/Zoom Scan (7x7x7)/Cube 0: Measurement grid: dx=5mm, dy=5mm, dz=5mm
Reference Value = 102.6 V/m; Power Drift = -0.06 dB
Peak SAR (extrapolated) = 25.0 W/kg
SAR(1 g) = 13.4 W/kg; SAR(10 g) = 6.55 W/kg
Maximum value of SAR (measured) = 17.2 W/kg

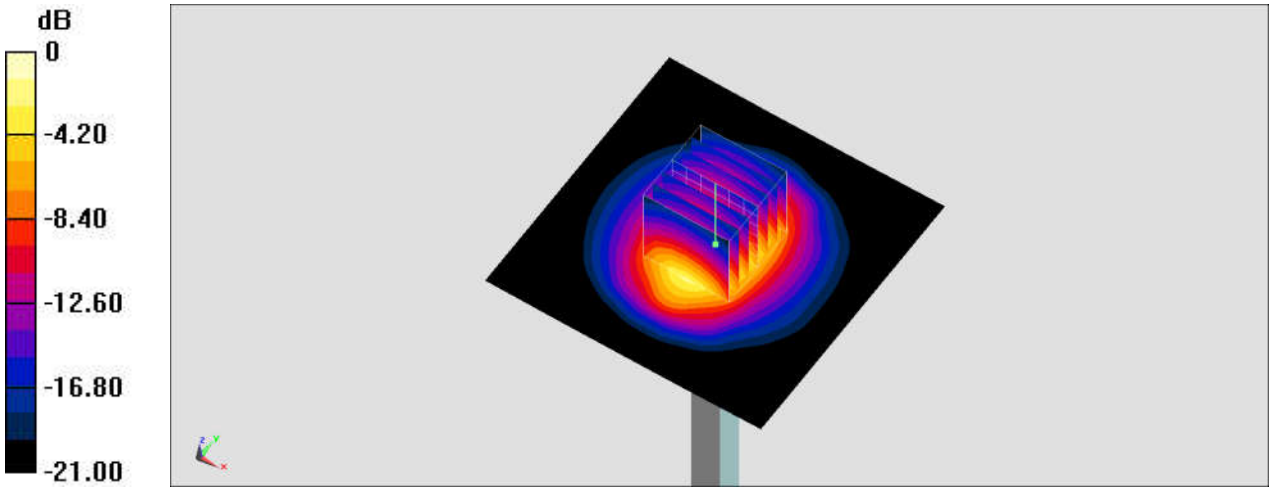

0 dB = 17.2 W/kg = 12.36 dBW/kg

System Check_Head_5250MHz

DUT: D5GHzV2-1128

Communication System: CW; Frequency: 5250 MHz;Duty Cycle: 1:1
Medium: HSL_5G_201026 Medium parameters used : f = 5250 MHz; σ = 4.837 S/m; ε_r = 37.139; ρ = 1000 kg/m^3
Ambient Temperature：23.3 ℃; Liquid Temperature：22.3 ℃

DASY5 Configuration:
- Probe: EX3DV4 - SN3728; ConvF(5.14, 5.14, 5.14) @ 5250 MHz; Calibrated: 2020/2/4
- Sensor-Surface: 1.4mm (Mechanical Surface Detection)
- Electronics: DAE4 Sn376; Calibrated: 2019/12/6
- Phantom: ELI v4.0_Left; Type: QDOVA002AA; Serial: TP:1191
- Measurement SW: DASY52, Version 52.10 (4);SEMCAD X Version 14.6.14 (7483)

Pin=100mW/Area Scan (71x71x1): Interpolated grid: dx=1.000 mm, dy=1.000 mm
Maximum value of SAR (interpolated) = 19.4 W/kg

Pin=100mW/Zoom Scan (7x7x7)/Cube 0: Measurement grid: dx=4mm, dy=4mm, dz=1.4mm
Reference Value = 60.22 V/m; Power Drift = -0.07 dB
Peak SAR (extrapolated) = 29.6 W/kg
SAR(1 g) = 7.72 W/kg; SAR(10 g) = 2.2 W/kg
Maximum value of SAR (measured) = 19.6 W/kg

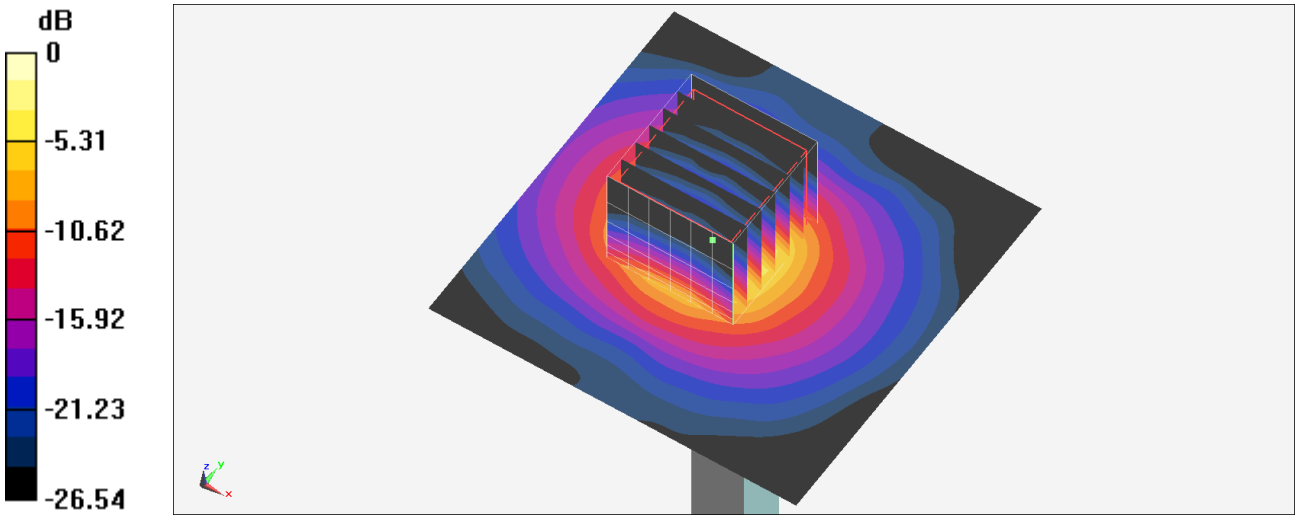

0 dB = 19.6 W/kg = 12.92 dBW/kg

System Check_Head_5250MHz

DUT: D5GHzV2-1006

Communication System: CW; Frequency: 5250 MHz;Duty Cycle: 1:1
Medium: HSL_5G_201027 Medium parameters used : f = 5250 MHz; σ = 4.757 S/m; ε_r = 37.205; ρ = 1000 kg/m^3
Ambient Temperature：23.1 ℃; Liquid Temperature：22.1 ℃

DASY5 Configuration:
- Probe: EX3DV4 - SN7590; ConvF(5.57, 5.57, 5.57) @ 5250 MHz; Calibrated: 2020/4/14
- Sensor-Surface: 1.4mm (Mechanical Surface Detection)
- Electronics: DAE3 Sn495; Calibrated: 2020/7/21
- Phantom: ELI v4.0; Type: QDOVA001BB; Serial: TP:1025
- Measurement SW: DASY52, Version 52.10 (4);SEMCAD X Version 14.6.14 (7483)

Pin=50mW/Area Scan (71x71x1): Interpolated grid: dx=1.000 mm, dy=1.000 mm
Maximum value of SAR (interpolated) = 9.40 W/kg

Pin=50mW/Zoom Scan (7x7x7)/Cube 0: Measurement grid: dx=4mm, dy=4mm, dz=1.4mm
Reference Value = 50.07 V/m; Power Drift = -0.08 dB
Peak SAR (extrapolated) = 14.9 W/kg
SAR(1 g) = 3.68 W/kg; SAR(10 g) = 1.06 W/kg
Maximum value of SAR (measured) = 9.25 W/kg

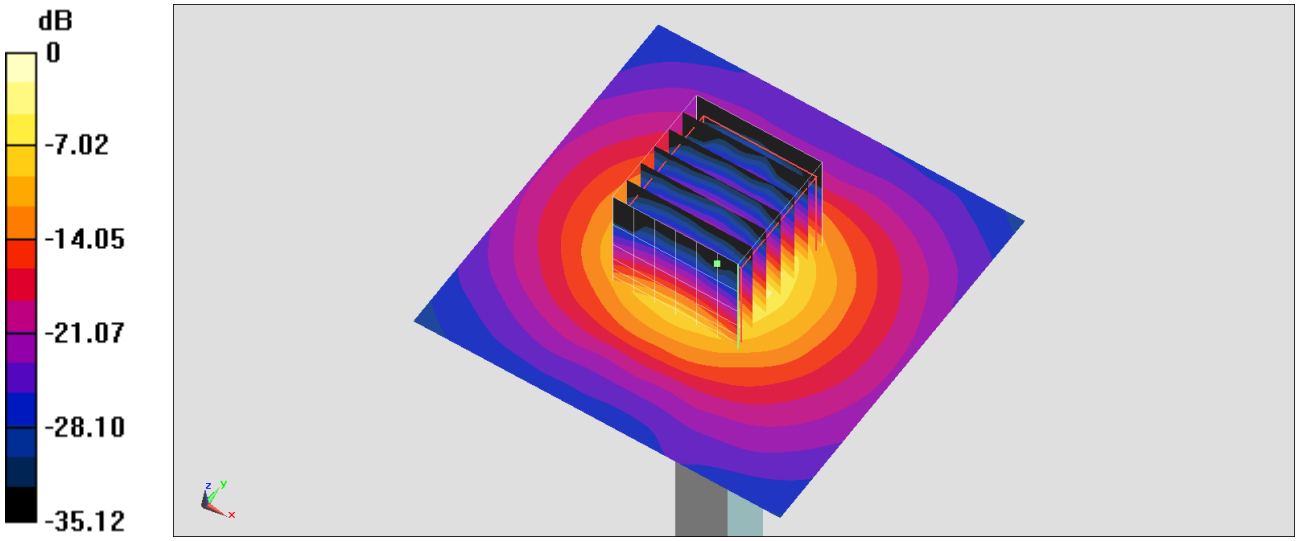

0 dB = 9.25 W/kg = 9.66 dBW/kg

System Check_Head_5250MHz

DUT: D5GHzV2-1006

Communication System: CW; Frequency: 5250 MHz;Duty Cycle: 1:1
Medium: HSL_5G_201103 Medium parameters used : f = 5250 MHz; σ = 4.589 S/m; ε_r = 36.9; ρ = 1000 kg/m^3
Ambient Temperature：23.3 ℃; Liquid Temperature：22.3 ℃

DASY5 Configuration:
- Probe: EX3DV4 - SN3642; ConvF(4.43, 4.43, 4.43) @ 5250 MHz; Calibrated: 2020/4/29
- Sensor-Surface: 1.4mm (Mechanical Surface Detection)
- Electronics: DAE3 Sn495; Calibrated: 2020/7/21
- Phantom: ELI v4.0; Type: QDOVA001BB; Serial: TP:1025
- Measurement SW: DASY52, Version 52.10 (4);SEMCAD X Version 14.6.14 (7483)

Pin=100mW/Area Scan (71x71x1): Interpolated grid: dx=1.000 mm, dy=1.000 mm
Maximum value of SAR (interpolated) = 23.4 W/kg

Pin=100mW/Zoom Scan (7x7x7)/Cube 0: Measurement grid: dx=4mm, dy=4mm, dz=1.4mm
Reference Value = 81.86 V/m; Power Drift = -0.11 dB
Peak SAR (extrapolated) = 34.3 W/kg
SAR(1 g) = 8.34 W/kg; SAR(10 g) = 2.36 W/kg
Maximum value of SAR (measured) = 21.2 W/kg

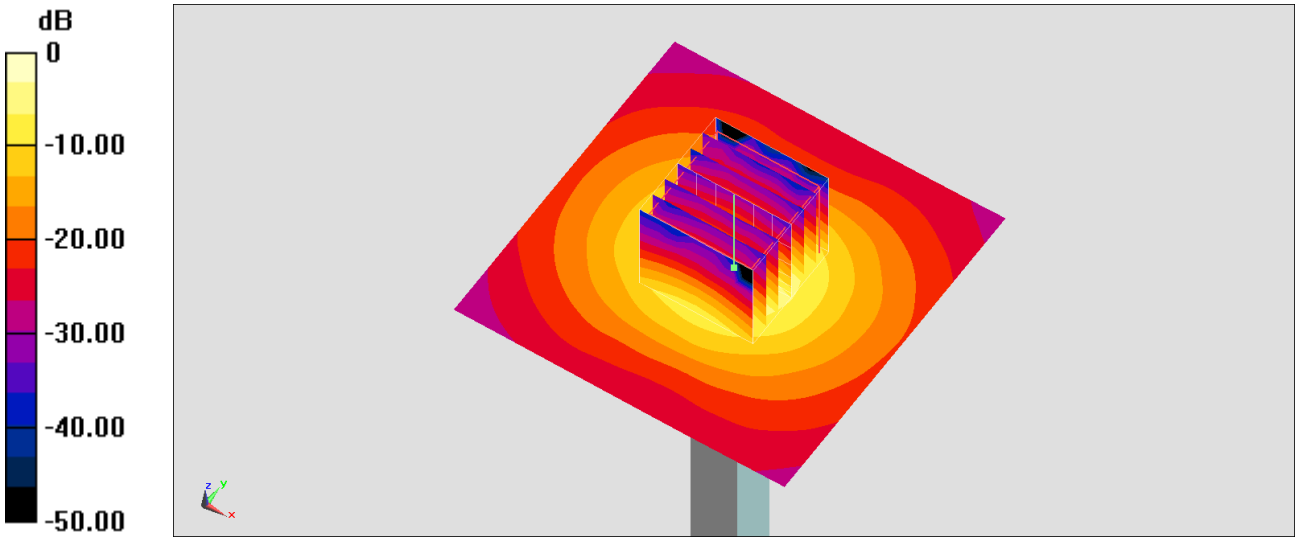

0 dB = 21.2 W/kg = 13.26 dBW/kg

System Check_Head_5600MHz

DUT: D5GHzV2-1128

Communication System: CW; Frequency: 5600 MHz;Duty Cycle: 1:1
Medium: HSL_5G_201026 Medium parameters used: f = 5600 MHz; σ = 5.217 S/m; ε_r = 36.628; ρ = 1000 kg/m^3
Ambient Temperature：23.3 ℃; Liquid Temperature：22.3 ℃

DASY5 Configuration:
- Probe: EX3DV4 - SN3728; ConvF(4.57, 4.57, 4.57) @ 5600 MHz; Calibrated: 2020/2/4
- Sensor-Surface: 1.4mm (Mechanical Surface Detection)
- Electronics: DAE4 Sn376; Calibrated: 2019/12/6
- Phantom: ELI v4.0_Left; Type: QDOVA002AA; Serial: TP:1191
- Measurement SW: DASY52, Version 52.10 (4);SEMCAD X Version 14.6.14 (7483)

Pin=100mW/Area Scan (71x71x1): Interpolated grid: dx=1.000 mm, dy=1.000 mm
Maximum value of SAR (interpolated) = 20.6 W/kg

Pin=100mW/Zoom Scan (7x7x7)/Cube 0: Measurement grid: dx=4mm, dy=4mm, dz=1.4mm
Reference Value = 61.78 V/m; Power Drift = 0.09 dB
Peak SAR (extrapolated) = 34.9 W/kg
SAR(1 g) = 8.07 W/kg; SAR(10 g) = 2.22 W/kg
Maximum value of SAR (measured) = 20.3 W/kg

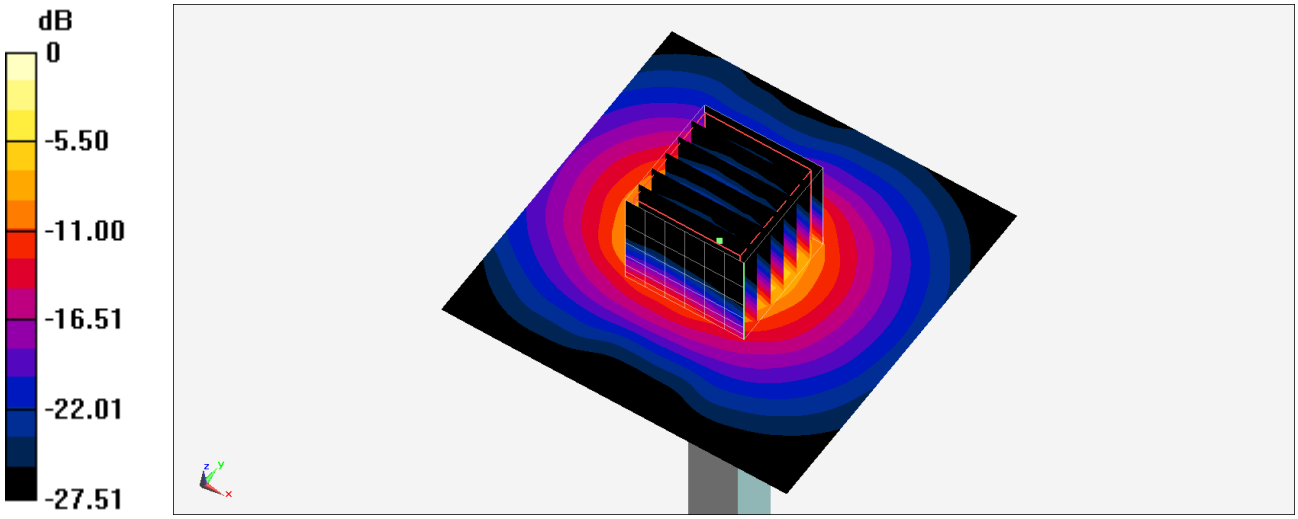

0 dB = 20.3 W/kg = 13.07 dBW/kg

System Check_Head_5600MHz

DUT: D5GHzV2-1006

Communication System: CW; Frequency: 5600 MHz;Duty Cycle: 1:1
Medium: HSL_5G_201027 Medium parameters used: f = 5600 MHz; σ = 5.131 S/m; ε_r = 36.661; ρ = 1000 kg/m^3
Ambient Temperature：23.1 ℃; Liquid Temperature：22.1 ℃

DASY5 Configuration:
- Probe: EX3DV4 - SN7590; ConvF(5.07, 5.07, 5.07) @ 5600 MHz; Calibrated: 2020/4/14
- Sensor-Surface: 1.4mm (Mechanical Surface Detection)
- Electronics: DAE3 Sn495; Calibrated: 2020/7/21
- Phantom: ELI v4.0; Type: QDOVA001BB; Serial: TP:1025
- Measurement SW: DASY52, Version 52.10 (4);SEMCAD X Version 14.6.14 (7483)

Pin=50mW/Area Scan (71x71x1): Interpolated grid: dx=1.000 mm, dy=1.000 mm
Maximum value of SAR (interpolated) = 9.85 W/kg

Pin=50mW/Zoom Scan (7x7x7)/Cube 0: Measurement grid: dx=4mm, dy=4mm, dz=1.4mm
Reference Value = 49.26 V/m; Power Drift = 0.03 dB
Peak SAR (extrapolated) = 17.4 W/kg
SAR(1 g) = 3.87 W/kg; SAR(10 g) = 1.1 W/kg
Maximum value of SAR (measured) = 10.1 W/kg

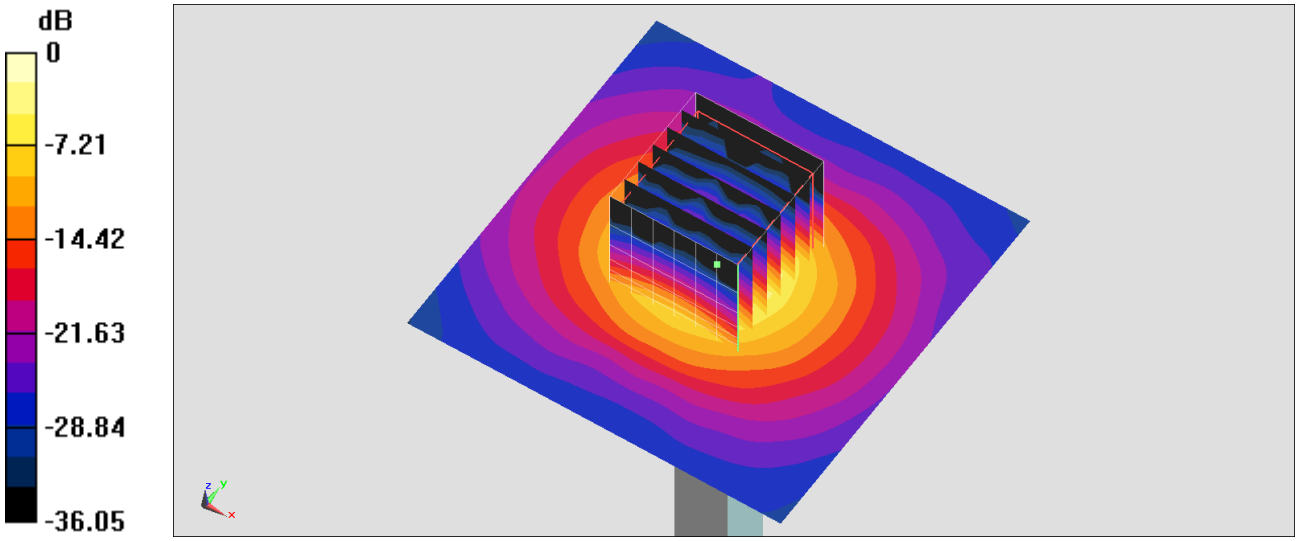

0 dB = 10.1 W/kg = 10.04 dBW/kg

System Check_Head_5600MHz

DUT: D5GHzV2-1006

Communication System: CW ; Frequency: 5600 MHz;Duty Cycle: 1:1
Medium: HSL_5G_201103 Medium parameters used: f = 5600 MHz; σ = 4.941 S/m; ε_r = 36.36; ρ = 1000 kg/m^3
Ambient Temperature：23.3 ℃; Liquid Temperature：22.3 ℃

DASY5 Configuration:
- Probe: EX3DV4 - SN3642; ConvF(4.19, 4.19, 4.19) @ 5600 MHz; Calibrated: 2020/4/29
- Sensor-Surface: 1.4mm (Mechanical Surface Detection)
- Electronics: DAE3 Sn495; Calibrated: 2020/7/21
- Phantom: ELI v4.0; Type: QDOVA001BB; Serial: TP:1025
- Measurement SW: DASY52, Version 52.10 (4);SEMCAD X Version 14.6.14 (7483)

Pin=100mW/Area Scan (71x71x1): Interpolated grid: dx=1.000 mm, dy=1.000 mm
Maximum value of SAR (interpolated) = 23.6 W/kg

Pin=100mW/Zoom Scan (7x7x7)/Cube 0: Measurement grid: dx=4mm, dy=4mm, dz=1.4mm
Reference Value = 74.86 V/m; Power Drift = -0.08 dB
Peak SAR (extrapolated) = 39.0 W/kg
SAR(1 g) = 8.75 W/kg; SAR(10 g) = 2.44 W/kg
Maximum value of SAR (measured) = 22.9 W/kg

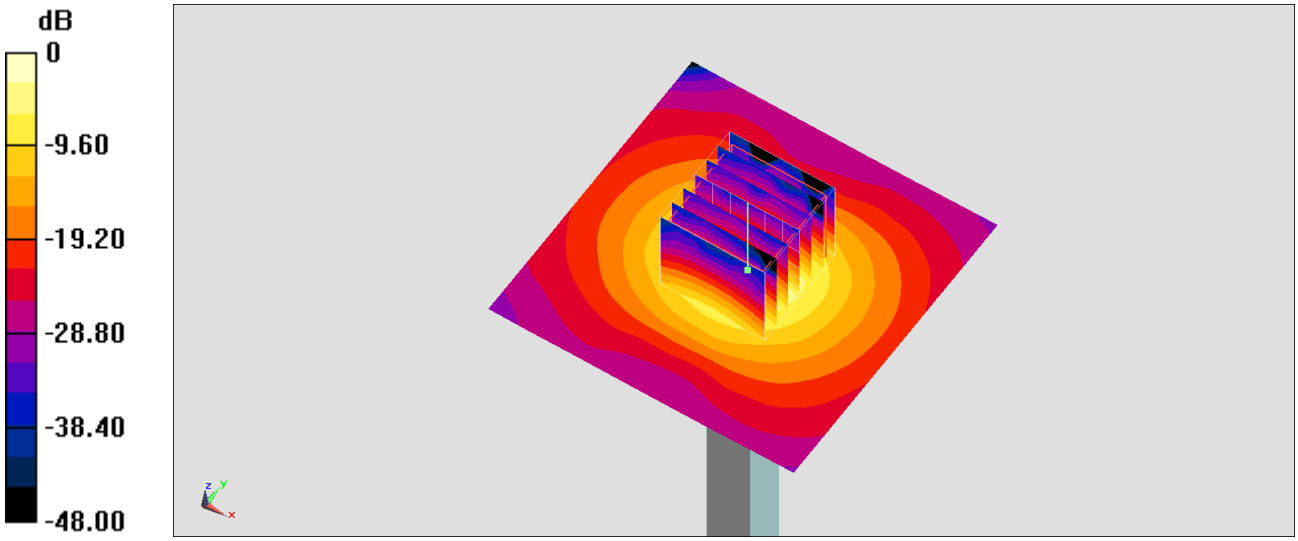

0 dB = 22.9 W/kg = 13.60 dBW/kg

System Check_Head_5750MHz

DUT: D5GHzV2-1128

Communication System: CW; Frequency: 5750 MHz;Duty Cycle: 1:1
Medium: HSL_5G_201026 Medium parameters used: f = 5750 MHz; σ = 5.386 S/m; ε_r = 36.445; ρ = 1000 kg/m^3
Ambient Temperature：23.3 ℃; Liquid Temperature：22.3 ℃

DASY5 Configuration:
- Probe: EX3DV4 - SN3728; ConvF(4.78, 4.78, 4.78) @ 5750 MHz; Calibrated: 2020/2/4
- Sensor-Surface: 1.4mm (Mechanical Surface Detection)
- Electronics: DAE4 Sn376; Calibrated: 2019/12/6
- Phantom: ELI v4.0_Left; Type: QDOVA002AA; Serial: TP:1191
- Measurement SW: DASY52, Version 52.10 (4);SEMCAD X Version 14.6.14 (7483)

Pin=100mW/Area Scan (71x71x1): Interpolated grid: dx=1.000 mm, dy=1.000 mm
Maximum value of SAR (interpolated) = 19.0 W/kg

Pin=100mW/Zoom Scan (8x8x7)/Cube 0: Measurement grid: dx=4mm, dy=4mm, dz=1.4mm
Reference Value = 57.41 V/m; Power Drift = 0.06 dB
Peak SAR (extrapolated) = 33.9 W/kg
SAR(1 g) = 7.57 W/kg; SAR(10 g) = 2.15 W/kg
Maximum value of SAR (measured) = 19.4 W/kg

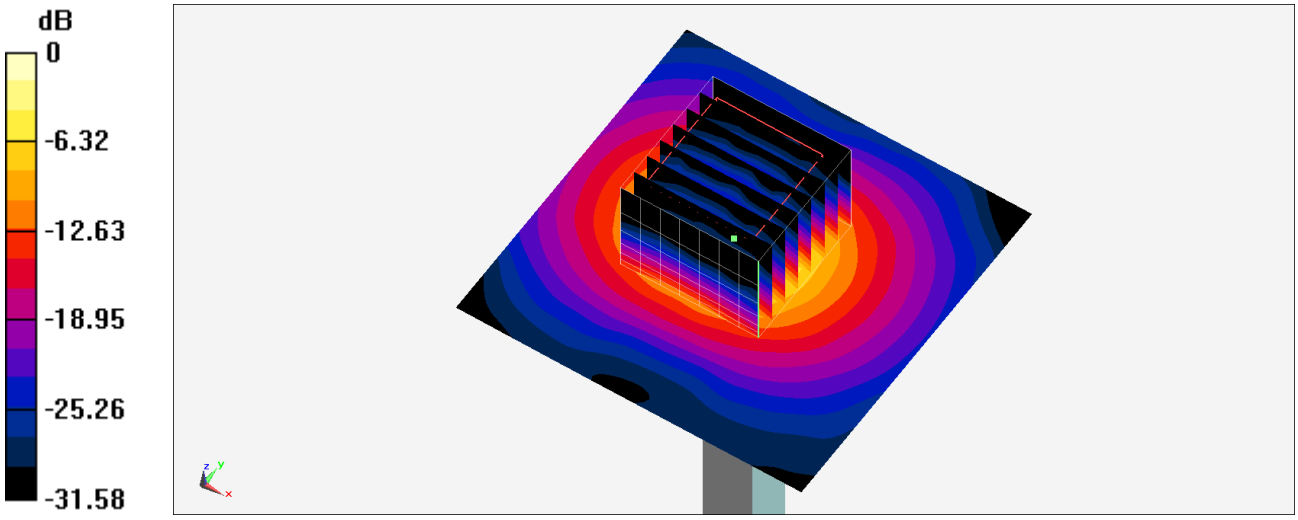

0 dB = 19.4 W/kg = 12.88 dBW/kg

System Check_Head_5750MHz

DUT: D5GHzV2-1006

Communication System: CW ; Frequency: 5750 MHz;Duty Cycle: 1:1
Medium: HSL_5G_201027 Medium parameters used: f = 5750 MHz; σ = 5.275 S/m; ε_r = 36.449; ρ = 1000 kg/m^3
Ambient Temperature：23.1 ℃; Liquid Temperature：22.1 ℃

DASY5 Configuration:
- Probe: EX3DV4 - SN7590; ConvF(5.3, 5.3, 5.3) @ 5750 MHz; Calibrated: 2020/4/14
- Sensor-Surface: 1.4mm (Mechanical Surface Detection)
- Electronics: DAE3 Sn495; Calibrated: 2020/7/21
- Phantom: ELI v4.0; Type: QDOVA001BB; Serial: TP:1025
- Measurement SW: DASY52, Version 52.10 (4);SEMCAD X Version 14.6.14 (7483)

Pin=50mW/Area Scan (71x71x1): Interpolated grid: dx=1.000 mm, dy=1.000 mm
Maximum value of SAR (interpolated) = 11.6 W/kg

Pin=50mW/Zoom Scan (7x7x7)/Cube 0: Measurement grid: dx=4mm, dy=4mm, dz=1.4mm
Reference Value = 48.79 V/m; Power Drift = -0.03 dB
Peak SAR (extrapolated) = 17.0 W/kg
SAR(1 g) = 3.99 W/kg; SAR(10 g) = 1.13 W/kg
Maximum value of SAR (measured) = 10.1 W/kg

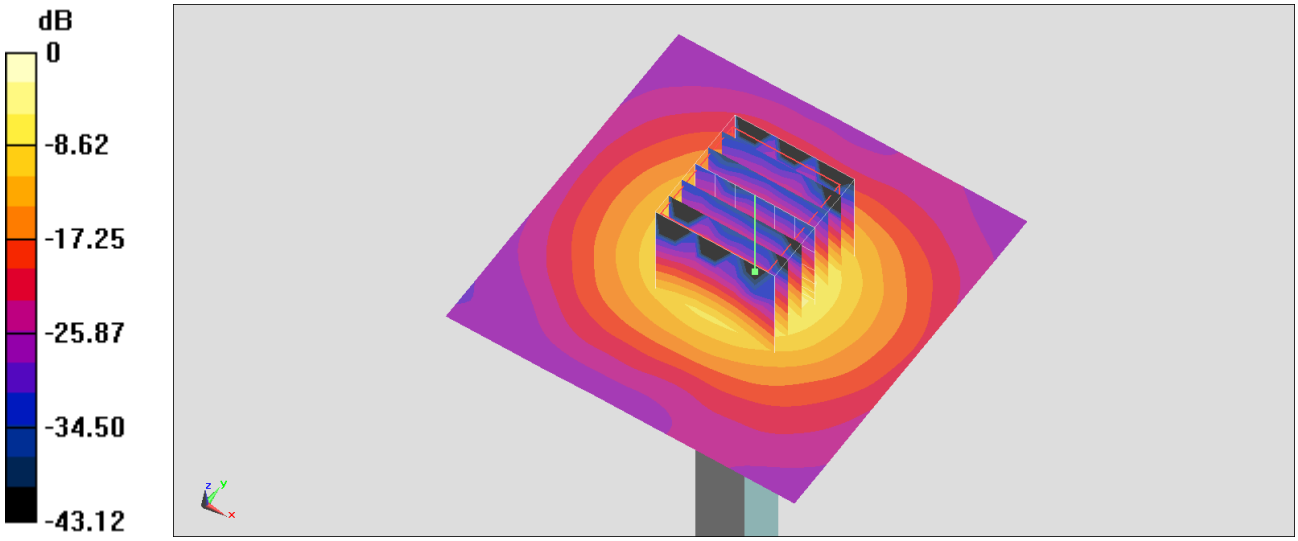

0 dB = 10.1 W/kg = 10.04 dBW/kg

System Check_Head_5750MHz

DUT: D5GHzV2-1006

Communication System: CW ; Frequency: 5750 MHz;Duty Cycle: 1:1
Medium: HSL_5G_201103 Medium parameters used: f = 5750 MHz; σ = 5.092 S/m; ε_r = 36.225; ρ = 1000 kg/m^3
Ambient Temperature：23.3 ℃; Liquid Temperature：22.3 ℃

DASY5 Configuration:
- Probe: EX3DV4 - SN3642; ConvF(4.17, 4.17, 4.17) @ 5750 MHz; Calibrated: 2020/4/29
- Sensor-Surface: 1.4mm (Mechanical Surface Detection)
- Electronics: DAE3 Sn495; Calibrated: 2020/7/21
- Phantom: ELI v4.0; Type: QDOVA001BB; Serial: TP:1025
- Measurement SW: DASY52, Version 52.10 (4);SEMCAD X Version 14.6.14 (7483)

Pin=100mW/Area Scan (71x71x1): Interpolated grid: dx=1.000 mm, dy=1.000 mm
Maximum value of SAR (interpolated) = 21.5 W/kg

Pin=100mW/Zoom Scan (7x7x7)/Cube 0: Measurement grid: dx=4mm, dy=4mm, dz=1.4mm
Reference Value = 72.82 V/m; Power Drift = -0.05 dB
Peak SAR (extrapolated) = 38.6 W/kg
SAR(1 g) = 8.29 W/kg; SAR(10 g) = 2.33 W/kg
Maximum value of SAR (measured) = 22.1 W/kg

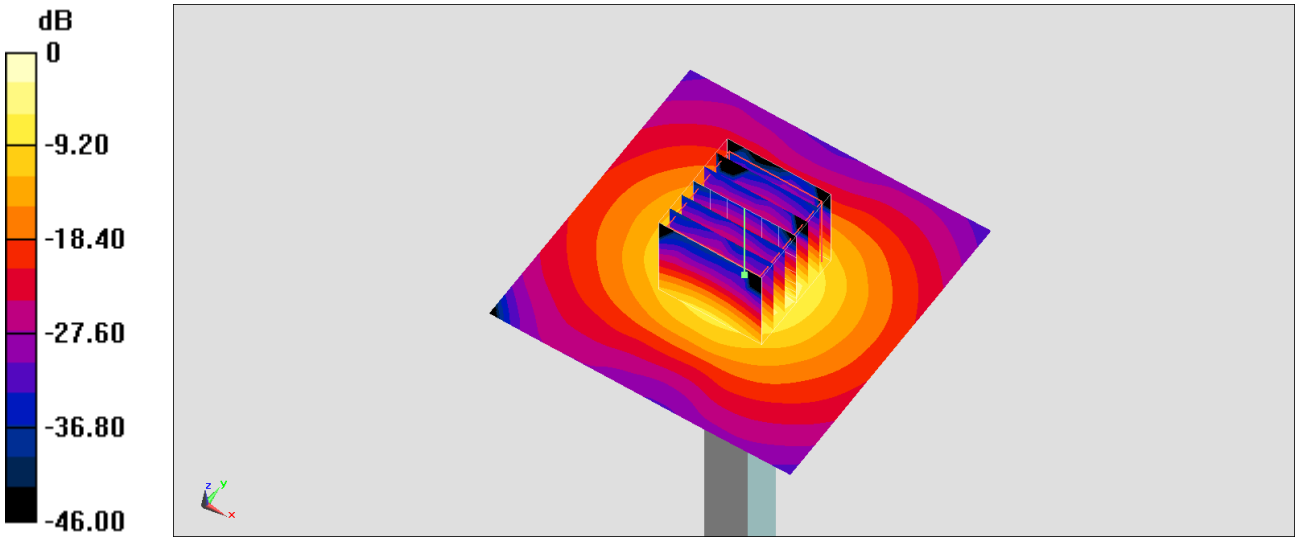

0 dB = 22.1 W/kg = 13.44 dBW/kg