RADIOFRAME NETWORKS

RadioFrame Networks

MC-Series Dual-Band RF Shelf (DBRFS)

Supplement to MC-Series System Implementation Guide, Rev. D

PRELIMINARY

The information contained in this document is subject to, and designated as confidential Information of RadioFrame Networks in accordance with, the Mutual Nondisclosure Agreement dated as of October 9, 2002, as amended on September 9, 2004, by and between Nextel Communications, Inc. and RadioFrame Networks, Inc.

March 23, 2006
999-0002-00 Rev x1

Revision History

Date	Rev	Notes
03/01/06	X	Review version with partial completion of cabling diagrams.
03/23/06	X1	Review version with cabling diagrams complete.

Keywords
iDEN, MC-Series, Base Radio, RadioBlade, Dual Band, Dual-Band

RadioFrame Networks, Inc.
1120 112th Ave NE
Suite 600
Bellevue, WA 98004
Tel.: +1 425 278 2780 Fax: +1 425 278 2781
http://www.radioframenetworks.com

PRELIMINARY

Service Information

This equipment complies with part 15 of the FCC Rules. Operation is subject to the two following conditions: This device may not cause harmful interference, and this device must accept any interference received, including interference that may cause undesired operation. This equipment has been tested and found to comply with the limits pursuant to part 90.691 of the FCC Rules. These limits are designed to provide reasonable protection against harmful interference when the equipment is operated in a commercial environment.

Notices

These installation standards have been prepared to provide Nextel Communications with general standards necessary to ensure that installed RadioFrame Networks equipment operates in accordance with the design parameters in the owned or leased buildings of Nextel Communications and its customers, and to make certain equipment is installed safely and efficiently.

RadioFrame Networks reserves the right to revise this document for any reason, including, but not limited to, conformity with standards promulgated by various governmental or regulatory agencies, utilization of advances in the state of the technical arts, or to reflect changes in the design of equipment, techniques, or procedures described or referred to herein.

Liability to anyone arising out of use or reliance upon any information set forth herein is expressly disclaimed, and no representation or warranties, expressed or implied, are made with respect to the accuracy or utility of any information set forth herein.

Copyrights and Trademarks

RadioFrame Networks is a trademark or service mark, and RadioFrame, RadioBlade and the RadioFrame Networks logo are registered trademarks of RadioFrame Networks, Inc. You may not use these or any other RadioFrame Networks trademarks or service marks without the written permission of RadioFrame Networks, Inc. All other trademarks and trade names are the property of their respective owners.

Throughout this publication, the terms RadioFrame Networks, RadioFrame and RFN signify RadioFrame Networks, Inc.

MC-Series Dual-Band RF Shelf (DBRFS) Supplement to MC-Series System Implementation Guide, Rev. D
© Copyright 2006 RadioFrame Networks, Inc. All Rights Reserved. No part may be reproduced, in any media, except as authorized by written permission of RadioFrame Networks, Inc.

Notice:

This document contains important warnings regarding potential RF emission hazards. Please refer to Appendix C before installing radio equipment.

References

[1] *MC-Series System Implementation Guide*, Rev D.
[2] *RFN Alarms/Events Reference Guide*, V.17.

Table of Contents

1 Introduction 5
1.1 Summary of MC-Series System Differences with the Dual-Band 5
1.1.1 Multi-Channel RadioBlade® (MCRB) Transceiver 5
1.1.2 Air Link Interface Chassis (AIC) and BTS Interface Chassis (BIC) 5
1.1.3 RadioBlade Shelf 6
1.1.4 Dual-Band RF Shelf 6
1.1.5 Top of Rack Bulkhead 6
2 Interface and Configuration 6
2.1 Cell Configuration and Capacity 6
2.2 Receive Diversity 6
2.3 Alarm Reporting 6
2.4 System Configuration 7
3 Product Architecture 7
3.1 Dual-Band System Overview 7
3.2 Dual Band RF Shelf (DBRFS) 8
3.3 Top of Rack Bulkhead 8
4 Installation Instructions 9
4.1 Converting a Single-Band System to a Dual-Band System 9
4.1.1 Prerequisites 10
4.1.2 Tools needed 10
4.1.3 Summary of Procedures 10
4.1.4 Measure Output Power 11
4.1.5 Power Down 11
4.1.6 Remove Single-Band RF Shelves 12
4.1.7 Install Three Dual-Band RF Shelves 14
4.1.8 Remove Main Power Leads at PDU 14
4.1.9 Replace TOR Bulkhead 15
4.1.10 Connect, Route and Dress Remaining Cabling 18
4.1.11 Power Up the Rack 19
4.1.12 Adjust TOR Output Power 21
Appendix A. Specifications 22
A.1 RF Performance 22
A.2 Physical 25
Appendix B. Acronyms 28
Appendix C. iDEN Microcell Rack Stack-Up, Dual-Band 3-Sector (Factory Default) Configuration 30
Appendix D. Dangerous RF Emissions Precautions 42

PRELIMINARY

Figures

Figure 1 High-Level Diagram—Interfaces 7
Figure 2 DBRFS Front and Rear Views 8
Figure 3 Dual-Band Bulkhead 9
Figure 4 PDU, Front View, Showing Breakers 11
Figure 5 Single-Band RF Shelf Rear View 13
Figure 6 Mounting Screw Locations, Single-Band RF Shelf Front View 13
Figure 7 Mounting Screw Locations, Dual-Band RF Shelf Front View 14
Figure 8 PDU Rear View 15
Figure 9 Single-Band Bulkhead, View from Above 15
Figure 10 Dual-Band TOR Copper Bulkhead, Underside View 16
Figure 11 Connector Locations on the Dual-Band RF Shelf Back Panel 18
Figure 12 Position of RadioBlade Shelf Locking Arms 20
Figure 13 TOR Cabling (Underside View), Dual-Band 3-Sector MC-Series System 31
Figure 14 RFS to RBS RF Cabling, 3-Sector Dual-Band MC-Series System 34
Figure 15 Power and Ground Connections, MC-Series System, Fully Populated 36
Figure 16 Cabling, Site Controller and Interface Chasses, Dual-Band 3-Sector MC-Series System 41

Tables

Table 1 FRU, Upgrade Kit for Single-to-Dual-Band System 5
Table 2 RFS1 (Single-Band) Cables to Detach 13
Table 3 PDU Cables to Detach 15
Table 4 TOR, Single-Band, Cables to Disconnect 16
Table 5 Bulkhead RF Cable Connections at TOR (Underside) 17
Table 6 Cable Connections for RF Shelf # 1, with Equivalent RFS2 and RFS3 Connections Noted 19
Table 7 Frequency of Operation 22
Table 8 Transmitter Performance Summary 22
Table 9 TOR Output Power 22
Table 10 Receiver Performance Summary 23
Table 11 Transmit Filter Specification—800 MHz Band 24
Table 12 Transmit Filter Specification—900 MHz Band 24
Table 13 Receive Filter Specifications—800 MHz Band 25
Table 14 Receive Filter Specifications—900 MHz Band 25
Table 15 MC-Series Dimensions 25
Table 16 MC-Series Component Weights 26
Table 17 DC Power 26
Table 18 Environmental Specifications 26
Table 19 Agency Compliances 27
Table 20 Cable Connections, Top of Rack Dual-Band Bulkhead, 3-Sector Configuration 30
Table 21 Cable Connections, RF Shelf, Dual-Band 3-Sector Configuration 32
Table 22 Cable Connections, RadioBlade Shelf, Dual-Band 3-Sector Configuration 33
Table 23 Cable Connections, PDU, Dual Band 3-Sector Configuration 35
Table 24 Cable Connections, CSU, Dual Band 3-Sector Configuration 37
Table 25 Cable Connections, Primary iSC, Dual-Band 3-Sector Configuration 38
Table 26 Cable Connections, EAS, Dual-Band 3-Sector Configuration 39
Table 27 Cable Connections, BIC, Dual-Band 3-Sector Configuration 39
Table 28 Cable Connections, AIC, Dual Band, 3-Sector Configuration 40

PRELIMINARY

1 Introduction

This supplement describes the dual-band—800E and 900 MHz—RF distribution option for the MC-Series system. Information is presented here in terms of differences from the single-band distribution system. Revision D of the *MC-Series System Implementation Guide*, which is on the software distribution CD, has instructions for installing, configuring and commissioning the MC-Series system.

The Dual-Band RF Shelf (DBRFS) simultaneously supports the 800E and 900 MHz bands with the necessary Tx and Rx amplification and filtering. With the DBRFS, the 800E and 900 MHz bands are broken out separately at the Top of the Rack (TOR), and the bands are broken out into separate Rx and Tx ports.

The dual-band RF distribution option does not replace the 800 MHz system but is offered as an alternate MC-Series configuration. The MC-Series system can operate in the 800 and 900 bands as configured by system software.

Upgrade between the single-band and dual-band systems is possible with an Upgrade Kit, PN 176-0980-00, itemized in Table 1.

Table 1 FRU, Upgrade Kit for Single-to-Dual-Band System

Item Description	Qty
Copper Cabinet Bulkhead Subassembly, MC-Series Dual-Band System	1
Cabinet Top Ventilation Subassembly, 13” x 19”	1
Cable Harness Dual-Band (Top-of-Rack)	1
Patch Cable, Enhanced CAT-5, 7 ft	3
FRU Label, Upgrade Kit for MC-Series Dual-Band System	1
Terminator, 50 Ω SMA	6
Tie Wrap, 5.6"	20
Grommet, Continuous, Slotted Wall, 0.072", Polyethylene	5

1.1 Summary of MC-Series System Differences with the Dual-Band

This subsection briefly touches on changes made to MC-Series components to support the dual-band option.

1.1.1 Multi-Channel RadioBlade® (MCRB) Transceiver

Operation of the MC-Series system in the 900 MHz band requires the use of an MCRB transceiver. The MCRB duplicates the RF functions of up to 6 simultaneously operational iDEN radio transceivers, supporting six corresponding Transmit (Tx) - Receive (Rx) channel pairs with full-duplex operation. The MCRB can operate in either the 800E or the 900 MHz band

1.1.2 Air Link Interface Chassis (AIC) and BTS Interface Chassis (BIC)

No hardware changes to the AIC and BIC are necessary for operation of DBRFS units in an MC-Series system.

PRELIMINARY

1.1.3 RadioBlade Shelf

There is no change to the RadioBlade shelf (RBS) hardware to accommodate the dual-band RFS.

1.1.4 Dual-Band RF Shelf

The DBRFS supports both 800E and 900 MHz bands simultaneously for transmit, receive and receive diversity yet is backward compatible with the original 800 MHz shelf. The DBRFS provides for one each 800 and 900 MHz Tx antenna connections, and two each 800 and 900 MHz receive antenna connections for diversity. As with the single-band RF Shelf, the Major and Minor Alarm signals are monitored by the MC-Series system through a direct connection to the RF Shelf's corresponding RBS group alarm input. The RF Shelf and the RBS Group are connected through a serial alarm cable.

1.1.5 Top of Rack Bulkhead

Because a dual-band MC-Series system requires separate 800 and 900 MHz Tx and Rx ports at the top of the rack, a new TOR copper bulkhead is required to be installed if both bands are to be used.

2 Interface and Configuration

2.1 Cell Configuration and Capacity

The MC-Series system can be configured to have 1, 2 or 3 sectors. The single sector, or omni, configuration can have up to 20 BRs. In multi-sector configurations, the BRs must be assigned to sectors in groupings of 12 or fewer. For a 3-sector system, the maximum number of BRs per sector is 12. For a 2-sector configuration, one of the sectors can have up to 20 BRs, while the other sector can have up to 12. In summary, if any sector exceeds 12 carriers, only two sectors are allowed, and the second sector is limited to 12 or fewer carriers.

As shipped, the MC-Series system is configure for 3 sectors. Reconfiguration instructions can be found in **Error! Reference source not found.**.

> **Note:** The configuration rule of thumb is: If any sector exceeds 12 carriers, only two sectors are allowed, and the second sector is limited to 12 or fewer carriers. This limitation is due to the way in which the present software assigns DSP resources to BRs and will be removed in a future software release.

2.2 Receive Diversity

The MC-Series system containing DBRFS hardware can support 2-branch diversity. This option requires a software upgrade. For the MC-Series system, receive diversity will be selection based.

2.3 Alarm Reporting

There are no changes in alarm reporting for the DBRFS.

PRELIMINARY

2.4 System Configuration

There are no changes to the method of system configuration. As with previous MC-Series systems, an MC-Series system containing DBRFS units is configured from the OMC by use of a data-fill to the iSC.

3 Product Architecture

3.1 Dual-Band System Overview

An interface block diagram for an MC-Series system with DBRFS units is shown in Figure 1. These interfaces are identical to those of single-band systems. Additionally, the DBRFS is backwards compatible with 800 MHz-only MC-Series systems.

Figure 1 High-Level Diagram—Interfaces

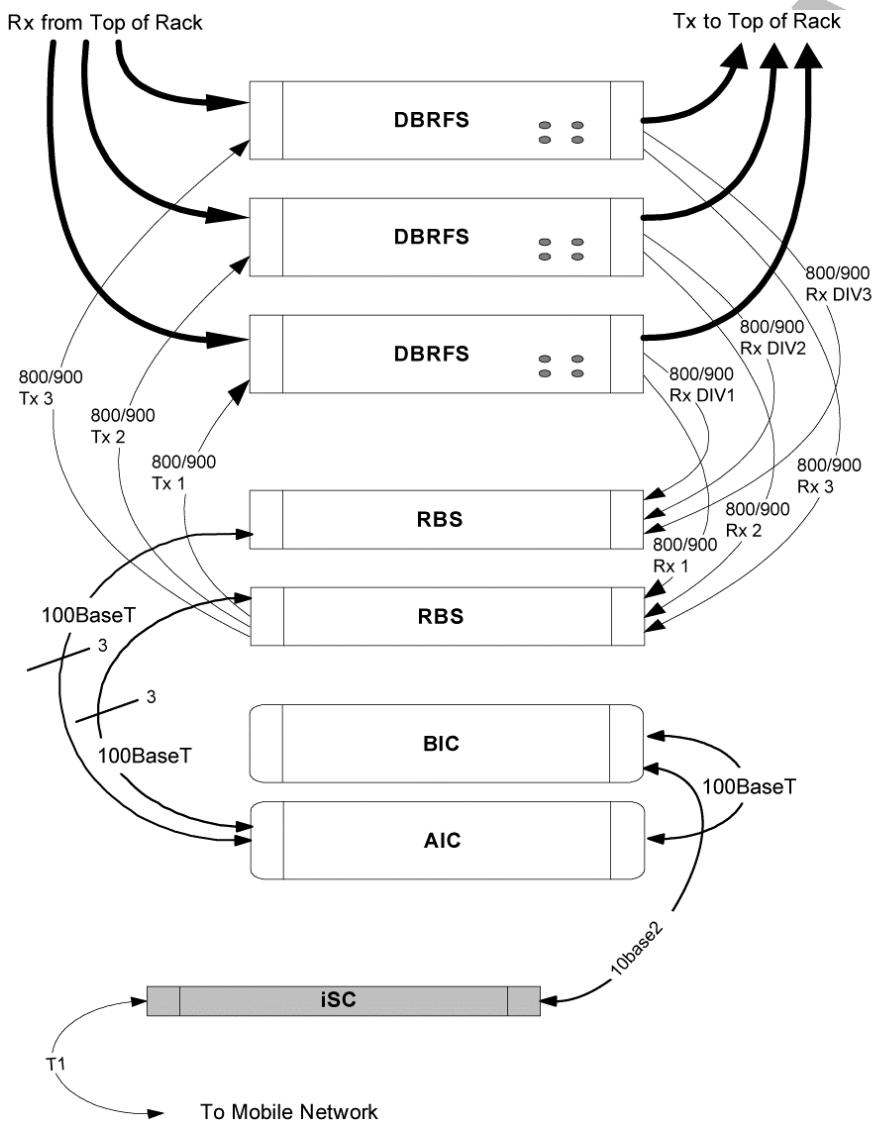

3.2 Dual Band RF Shelf (DBRFS)

Each DBRFS contains a single Tx path and two-branch diversity Rx. As shipped, the dual-band MC-Series system contains three DBRFS units. A front and rear view of the assembly are shown in Figure 2.

Figure 2 DBRFS Front and Rear Views

1. -48 V supply input
2. Cooling fan electrical connection
3. 100Base-T Ethernet connection*
4. Alarm cable connection
5. Manufacturing test port
6. TX input combiner
7. RX diversity output splitter
8. RX splitter output
9. Cooling fans
10. RX sampling/test ports
11. TX sampling/test ports
12. TX 900 Out
13. TX 800 Out
14. RX 900 In
15 RX 900 Diversity In
16. RX 800 Diversity In
17. RX 800 In

* Ports not enabled until a future software release.

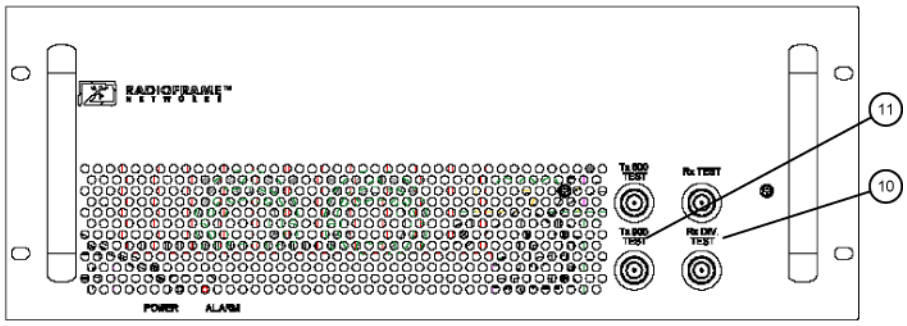

DBRFS Front View

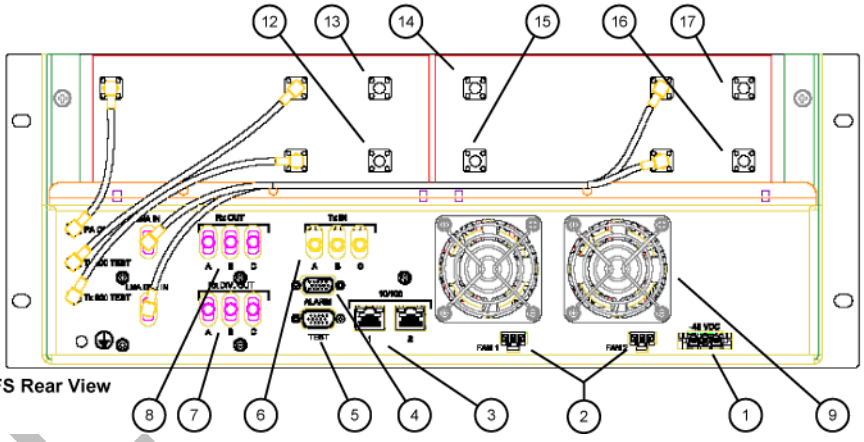

DBRFS Rear View

3.3 Top of Rack Bulkhead

To accommodate both 800 and 900 MHz Tx and Rx signals at the TOR, a new bulkhead is required. The number of feed-throughs has grown from 9 to 18 and the plate is proportionately wider. A view of the new bulkhead in the rack is shown in Figure 3.

PREL

Figure 3 Dual-Band Bulkhead

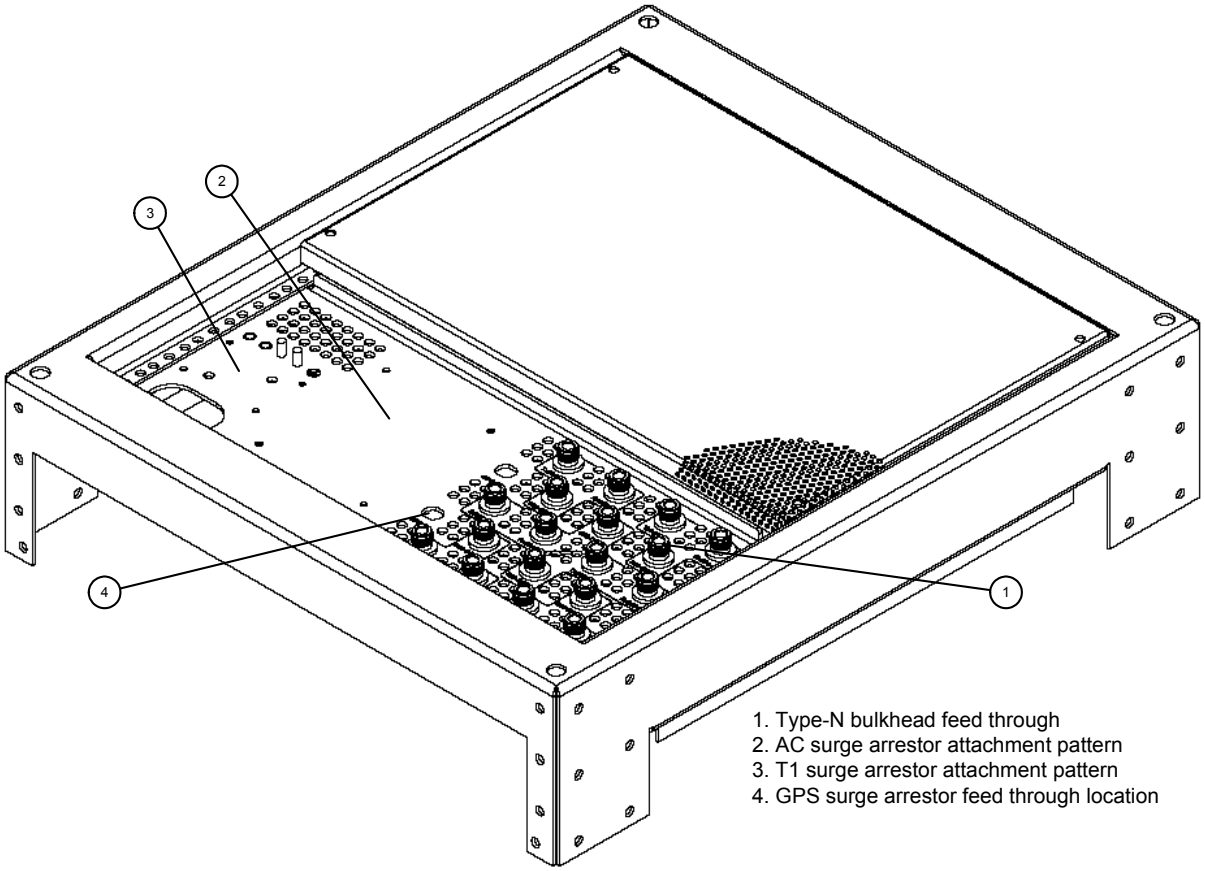

4 Installation Instructions

4.1 Converting a Single-Band System to a Dual-Band System

Note: Read this section in its entirety before beginning the conversion process so that you have an understanding of what you will be affecting.

Always use antistatic precautions.

Read the safety warnings in the *MC-Series System Implementation Guide* before proceeding.

Performing the conversion requires two people. Take necessary precautions for working with live -48 V circuits. Take necessary precautions for handling heavy loads.

The configuration of the MC-Series system as shipped is 3-sector, and these instructions are based on converting from a 3-sector to 3-sector system. (If you are starting with or converting to an omni or two-sector system, follow these instructions, but refer to **Error! Reference source not found.** for power, control, and RF cabling differences.)

For support of RadioFrame Networks equipment, contact the RadioFrame Networks Technical Assistance Center (TAC) at:

(US) 1-800-328-0847

PRELI

4.1.1 Prerequisites

These procedures presume that the MC-Series system is in place at its site of service and operational as a single-band system. Therefore, the prerequisites for operation will already have been satisfied:

- The T1 is live and has been tested.
- The datafill has been completed, including BR cabinet and position assignments, and conforms to the recommended datafill shown in the *MC-Series System Implementation Guide*.
- All site cabling and installation work has been completed and all punchlist items corrected.
- The system is powered and operational.
- The software is at least Revision 14.0.216.

Have the site configuration available for reference. Before proceeding to power down the system and exchanging RF shelf hardware:

- In System Manager, display the iDEN Configuration page, and change the cabinet/positions (and quad BRs or adjacent channel assignments) as required for the new configuration (refer to the site datafill).
- Pull new RF cables (e.g., for 900) as necessary from the site to TOR.
-

4.1.2 Tools needed

- SMA wrench, torque set to 0.45 Nm (4 in-lb)
- Phillips screwdriver, torque set to 4.5 Nm (40 in-lb)
- Ratchet wrench with 7/16 in socket
- Dykes
- RF power meter
- Tie fastener
- Disposable wrist grounding strap

4.1.3 Summary of Procedures

- Measure TOR Tx Power Output (composite and per carrier) and record the values.

Note: The entire rack needs to be powered down because the top-of-rack copper bulkhead, through which power cabling is routed, is replaced.

- Power down each element of the system. Shut down the main system power.
- Disconnect RF cables, ground, power and alarm cables from the old RF Shelves. Remove all SMA terminators from the old RF Shelves and set them aside. Disconnect main power leads from the PDU and pull them up through the TOR bulkhead.
- Remove the old RF Shelves from the rack and replace them with the new DBRFSs.
- Connect power cables in the new harness to the new DBRFSs.
- Connect the ground wire to the new DBRFSs.
- Connect Tx and Rx RF cables from the RBS.
- Attach SMA terminators on all ports not to be used.

PRELIMINARY

- Release and remove all existing RF cables on the right-hand side of the rear of the rack.
- Remove old bulkhead and perf panel at the TOR.
- Install new bulkhead, RF cables and perf panel.
- Connect RF cables from the underside of the new bulkhead to the DBRFSs.
- Run the Power leads to the PDU back through the new bulkhead.
- Redress the cabling along the right-hand side of the rear of the rack.
- Restore power to the rack.
- Adjust TOR output power to restore original level if necessary.

4.1.4 Measure Output Power

1. Measure the power from the Tx 1, Tx 2 and Tx 3 outputs using a digital RF power meter. Take your measurements at the antenna (DAS) inputs. If the installation incorporates the universal attenuator shelf (Wienschel Universal DAS Panel, Item Master 25026), you can take measurements there.

   Note: Test only the Tx 1 output in an omni configuration <<<and only the Tx 1 and Tx 2 outputs in a 2-sector configuration.>>>

2. Measure the output at the remote unit(s) to verify power budget accuracy.
3. Record these measurements so that you can replicate output power later with the DBRFS.

4.1.5 Power Down

Refer to Figure 4.

Figure 4 PDU, Front View, Showing Breakers

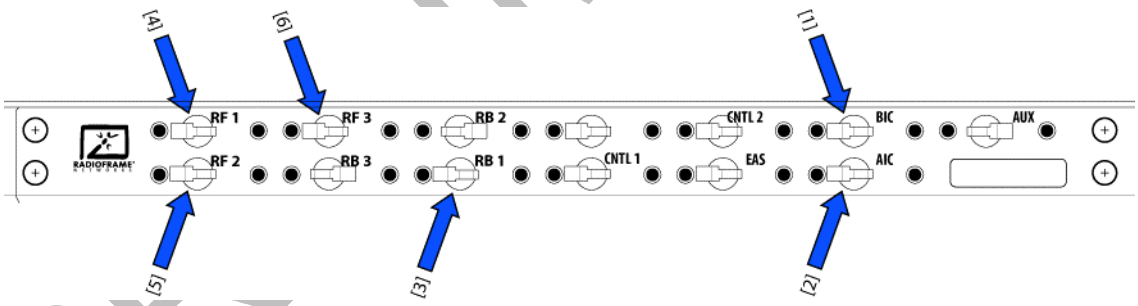

1. Using the breakers on the PDU, power off equipment in the MC-Series system rack in the following order:
   [3] BIC
   [4] AIC
   [5] RBS
   [6] RF Shelf 1, RF Shelf 2 and RF Shelf 3
   [7] CSU
   [8] Secondary iSC-3

   Note: Ensure that the power switch on the front of the secondary iSC-3 is in the OFF position.

   [9] EAS

   Note: Ensure that the power switch on the front of the CSU is in the OFF position.

   [10] Primary iSC-3

   Note: Ensure that the power switch on the front of the primary iSC-3 is in the OFF position.

PRELIMINARY

Warning!

Verify that all breakers in the PDU are in the OFF position prior to proceeding. Leave them in the OFF position until instructed otherwise. Ensure that the external -48 V feed and return can be powered down. You will need to find the breaker in an external powerplant to proceed. You will need to follow Sprint Nextel installation and maintenance procedures for safely powering down the MC-Series rack.

2. Shut down the main system power. Remove the power cables (-48 V and return) from the power source. (These route through the MC-Series copper bulkhead at the top of the rack and the bulkhead will be replaced as part of the upgrade.)

4.1.6 Remove Single-Band RF Shelves

Caution!

Always use a static grounding wrist strap before handling any board—do not attach the wrist strap to any painted surface on the chassis unit.

Caution!

Take precautions for managing a heavy load when maneuvering the RF shelves—the single-band RF shelf weighs 20 lb each, and the DBRFS weighs 49 lb each.

Note: The sample configuration referred to in this section is 3-sector, with no receive diversity (factory settings). Depending on the configuration of the MC-Series system, cabling may not conform precisely to the examples in this section. Be sure to make a note of variances in order to complete the re-cabling correctly for the dual-band system. Different dual-band cabling configurations are shown in Appendix C.

1. Refer to Figure 5 and Table 2. Disconnect the cables from the back of the RF shelves (1, 2 and 3 as applicable) and carefully free the cables so that they are temporarily out of the way and can be removed or re-connected to the new shelf as necessary. In order to free the cables, you must loosen the black cable brackets along the right side of the back of the cabinet. Partially backing out the brackets' Phillips screws will allow the brackets to swing free so that you can retighten them when the new cables are in place.

PRELIMINARY

Figure 5 Single-Band RF Shelf Rear View

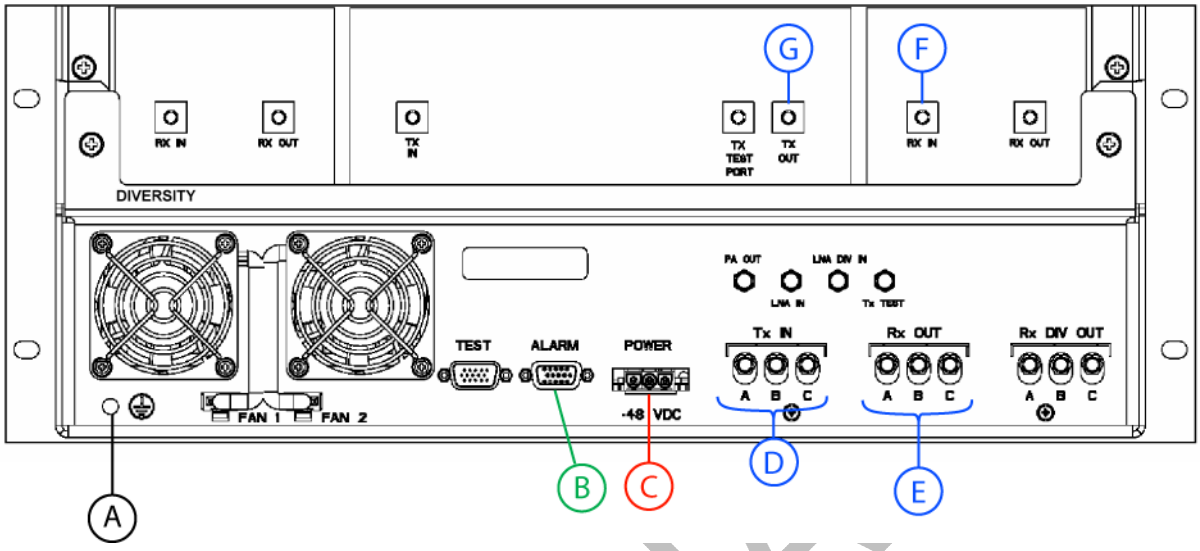

Table 2 RFS1 (Single-Band) Cables to Detach

From RFS1:		To		
Index	**Label**	**Element**	**Label**	**Notes**
A	GND	BUS BAR	--	Ground, power distribution unit
B	ALARM	RBS1	Alarm input A	
C	-48 VDC	PDU	RF1	-48 V feed and return
D	Tx IN A	RBS1	Tx A	Alarm feed, environmental alarm system
E	Rx OUT A	RFS1	Rx A	Power, RF Shelf #1
F	Rx IN	TOR	Rx 1	Power, RF Shelf #2
G	Tx OUT	TOR	Tx1	

2. Remove all SMA terminators from the unused RF ports on the RF shelves and set them aside. They will be reused in the dual-band shelves.
3. See Figure 6. Remove the 4 front mounting screws and remove the RF shelf from the rack.

Figure 6 Mounting Screw Locations, Single-Band RF Shelf Front View

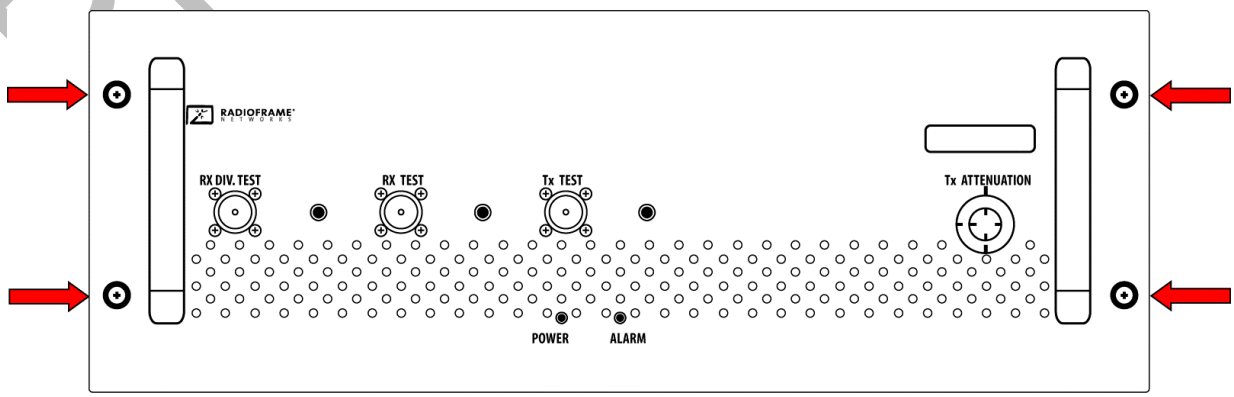

PRELIMINARY

4.1.7 Install Three Dual-Band RF Shelves

Caution!

Take precautions for managing a heavy load when maneuvering the RF shelves—the single-band RF shelf weighs 55 lb each, and the DBRFS weighs 49 lb each.

1. While supporting the Dual-Band RF shelf, slide it into the cabinet mounting position.
2. Secure the RF shelf to the cabinet mounting rails using the four mounting screws provided with the unit. See Figure 7.

Figure 7 Mounting Screw Locations, Dual-Band RF Shelf Front View

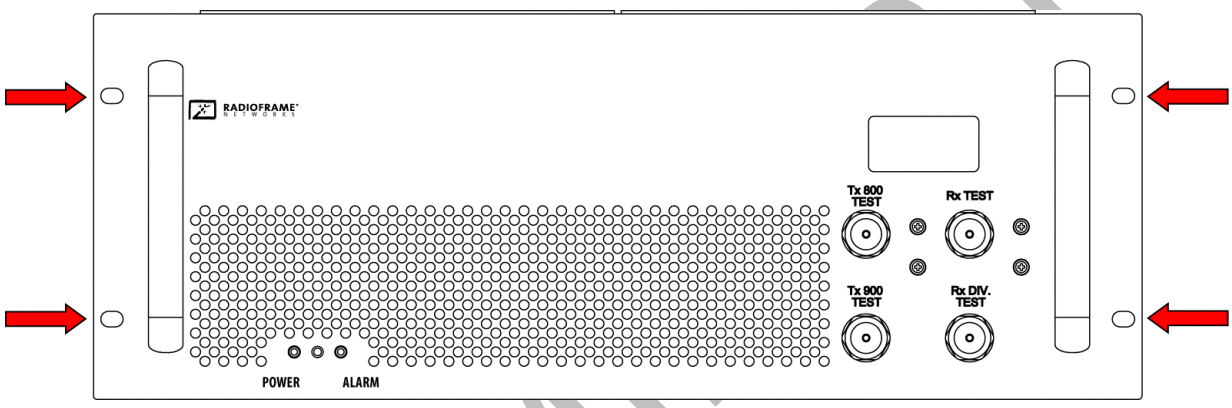

3. Tighten the screws to 4.5 Nm (40 in-lb).

4.1.8 Remove Main Power Leads at PDU

Warning!

Verify that the breaker in the external powerplant is powered off and the power cables disconnected before proceeding.

Caution!

When disengaging the system input power leads, take care to avoid damaging the remaining cables. The EMS alarm cable, which is routed along the left side of the back of the cabinet, is particularly delicate. Avoid putting tension on it while dislodging the power leads.

Disconnect the input power leads (see Figure 8 and Table 3) from the back of the PDU. Clip cable ties as necessary, and slide the cables out through the old copper bulkhead and set them aside. The power cables will be routed through the new bulkhead and reused.

PRELIMINARY

Figure 8 PDU Rear View

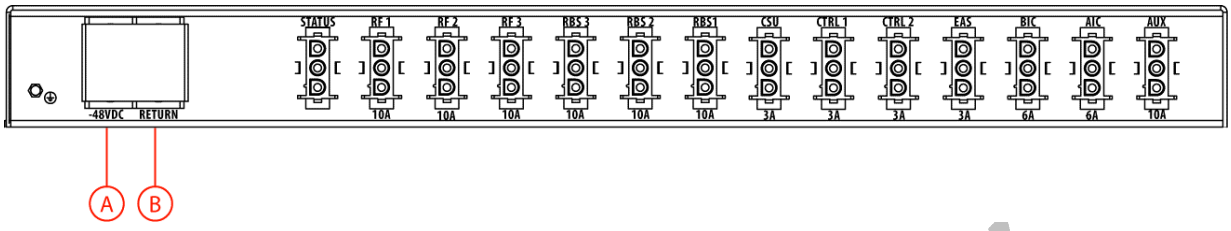

Table 3 PDU Cables to Detach

From PDU:		To		
Index	**Label**	**Element**	**Label**	**Notes**
A	-48 VDC	--	--	-48 V feed and return for the system
B	RETURN	--	--	

4.1.9 Replace TOR Bulkhead

Note: Make sure the cables at TOR are labeled for reattachment to the new bulkhead.

1. Refer to Figure 9 and Table 4. Disconnect the RF cables from the top of the bulkhead. Disconnect the ground strap from underneath the bulkhead. Move the cables out of the way. There is no need to disconnect the RF cables from the underside of the bulkhead because they will be removed along with the bulkhead plate.

Caution!

When disengaging cables that are to be removed, take care to avoid damaging remaining cables. The EMS alarm cable, which is routed along the left side of the back of the cabinet, is particularly delicate, and you should avoid putting tension on it while dislodging other cables.

Figure 9 Single-Band Bulkhead, View from Above

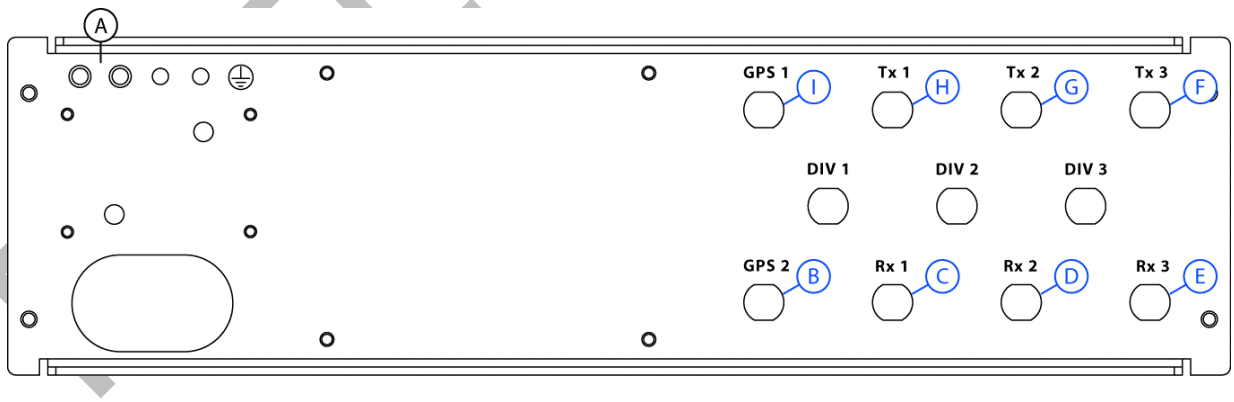

PRELIMINARY

Table 4 TOR, Single-Band, Cables to Disconnect

From TOR:		To		
Index	**Label**	**Element**	**Label**	**Notes**
A	GND	BUS BAR	--	Ground, bulkhead
B	GPS2	iSC2	GPS	Secondary iSC GPS IN
C	Rx1	RFS1	Rx IN	RF Shelf #1 Rx IN
D	Rx2	RFS2	Rx IN	RF Shelf #2 Rx IN
E	Rx3	RFS3	Rx IN	RF Shelf #3 Rx IN
F	Tx3	RFS3	Tx OUT	RF Shelf #3 Tx OUT
G	Tx2	RFS2	Tx OUT	RF Shelf #2 Tx OUT
H	Tx1	RFS1	Tx OUT	RF Shelf #1 Tx OUT
I	GPS	iSC2	GPS	Primary iSC GPS IN

2. Carefully disengage all RF cables you disconnected from the single-band RF shelf by snipping zip ties and unfastening Velcro on the right hand side of the rear of the rack. Make sure all these cables will be free when the bulkhead is removed.

   Note: Steps 3 through 7 require a second person to steady the bulkhead plates while the old one is removed and the new one installed.

3. Remove the 6 TOR bulkhead mounting screws, drop the bulkhead down and remove it, along with all its cables, from the rack.
4. Remove the 4 top mounting screws and remove the perf panel at the TOR.
5. The new RF cable harness for the dual-band rack has 18 RF cables. Connect them to the TOR bulkhead according to the labels on the cables and Figure 10 and Table 5. The Index letters in the figure are keyed to the table.

Figure 10 Dual-Band TOR Copper Bulkhead, Underside View

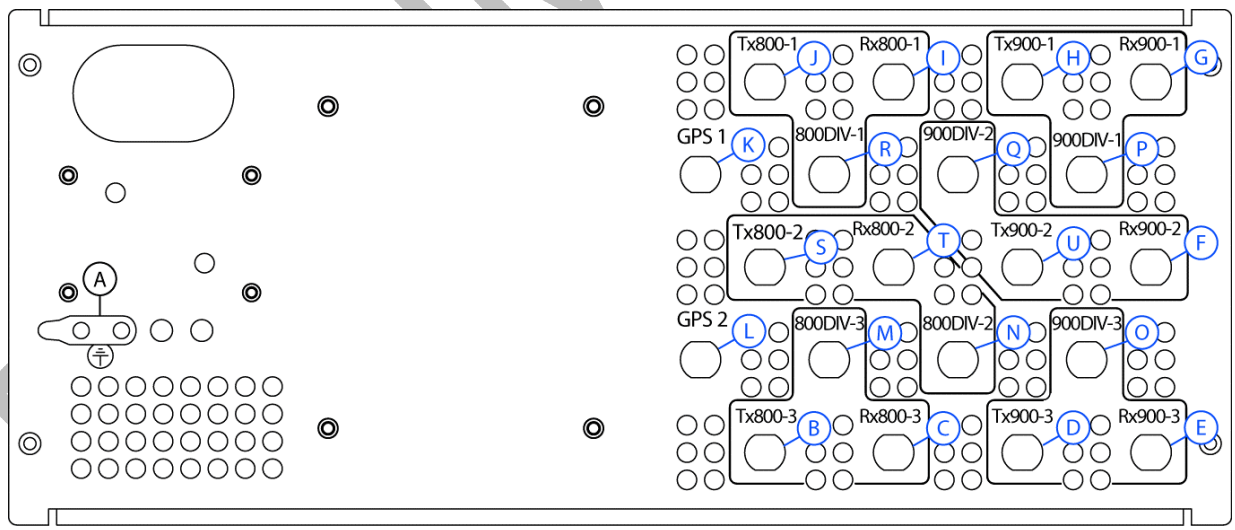

Note: Table 5 shows the destination connector of each RF cable (shown grayed out). You should only connect the TOR end of the cables at this time.

Table 5 Bulkhead RF Cable Connections at TOR (Underside)

From TOR:		To		
Index	**Label**	**Index**	**Label**	**Notes**
A	GND	--	--	Ground, TOR bulkhead; cable is customer supplied; lug is customer supplied—specified to be Panduit 2-hole, PN LCD6-14A, or equivalent.
B	Tx800-3	RFS3:L	Tx 800 OUT	RF Tx 800, RF Shelf # 3
C	Rx800-3	RFS3:I	Rx 800 IN	RF Rx 800, RF Shelf # 3
D	Tx900-3	RFS3:AA	Tx 900 OUT	RF Tx 900, RF Shelf # 3
E	Rx900-3	RFS3:K	Rx 900 IN	RF Rx 900, RF Shelf # 3
F	Rx900-2	RFS2:K	Rx 900 IN	RF Rx 900, RF Shelf # 2
G	Rx900-1	RFS1:K	Rx 900 IN	RF Rx 900, RF Shelf # 1
H	Tx900-1	RFS1:AA	Tx 900 OUT	RF Tx 900, RF Shelf # 1
I	Rx800-1	RFS1:I	Rx 800 IN	RF Rx 800, RF Shelf # 1
J	Tx800-1	RFS1:L	Tx 800 OUT	RF Tx 800, RF Shelf # 1
K	GPS1	iSC1:C	GPS	RF GPS, iSC # 1
L	GPS2	iSC2:C	GPS	RF GPS, iSC # 2
M	800-DIV-3	RFS3:X	Rx 800 DIV IN	RF Rx 800, diversity; connected only to TOR
N	800-DIV-2	RFS2:X	Rx 800 DIV IN	RF Rx 800, diversity; connected only to TOR
O	900-DIV-3	RFS3:Z	Rx 900 DIV IN	RF Rx 900, diversity; connected only to TOR
P	900-DIV-1	RFS1:Z	Rx 900 DIV IN	RF Rx 900, diversity; connected only to TOR
Q	900-DIV-2	RFS2:Z	Rx 900 DIV IN	RF Rx 900, diversity; connected only to TOR
R	800-DIV-1	RFS1:X	Rx 800 DIV IN	RF Rx 800, diversity; connected only to TOR
S	Tx800-2	RFS2:L	Tx 800 OUT	RF Tx 800, RF Shelf # 2
T	Rx800-2	RFS2:I	Rx 800 IN	RF Rx 800, RF Shelf # 2
U	Tx900-2	RFS2:AA	Tx 900 OUT	RF Tx 900, RF Shelf # 2

6. Fasten the new perf panel to the rack with the mounting screws provided.
7. Position the new RF cable harness for the dual-band rack along the right side of the back of the cabinet. Position the copper bulkhead plate up under the top rails of the cabinet and hand tighten the screws fastening the bulkhead to the cabinet.
8. Reconnect the ground strap to the two studs underneath the new bulkhead.
9. Run the power leads through the new bulkhead. Route them to the back of the PDU and reconnect them.
10. Connect all appropriate RF cables to the top side of the TOR copper bulkhead plate, including the 800 MHz cables and GPS cables from the old bulkhead and the newly pulled 900 MHz cables.

PRELIMINARY

4.1.10 Connect, Route and Dress Remaining Cabling

Refer to Figure 11 and Table 2. The Index letters in the figure are keyed to the table.

1. First ground the dual-band RF shelves to the bus bar by reconnecting the 2-hole lug which was removed in section 4.1.6, step 1.

   Note: The power connector on the DBRFS is farther to the right than on the single-band shelf. In step 2, you will need to free some power/return cable, which terminates in the PDU and is routed on the left side of the back of the rack. Starting at the unconnected end of the leads, carefully clip all zip ties up to the cable bracket on the cabinet. The power cable is dressed with a slack loop so you can gently free some cable—you probably can use about an extra foot. You may wish to loosen the cable bracket's Phillips screw to allow some play.

2. Reconnect the RF shelves' power leads, and then carefully connect the appropriate new RF cables from the underside of the new bulkhead.
3. Connect the cable from TOR GPS1 to GPS on the primary iSC.

Figure 11 Connector Locations on the Dual-Band RF Shelf Back Panel

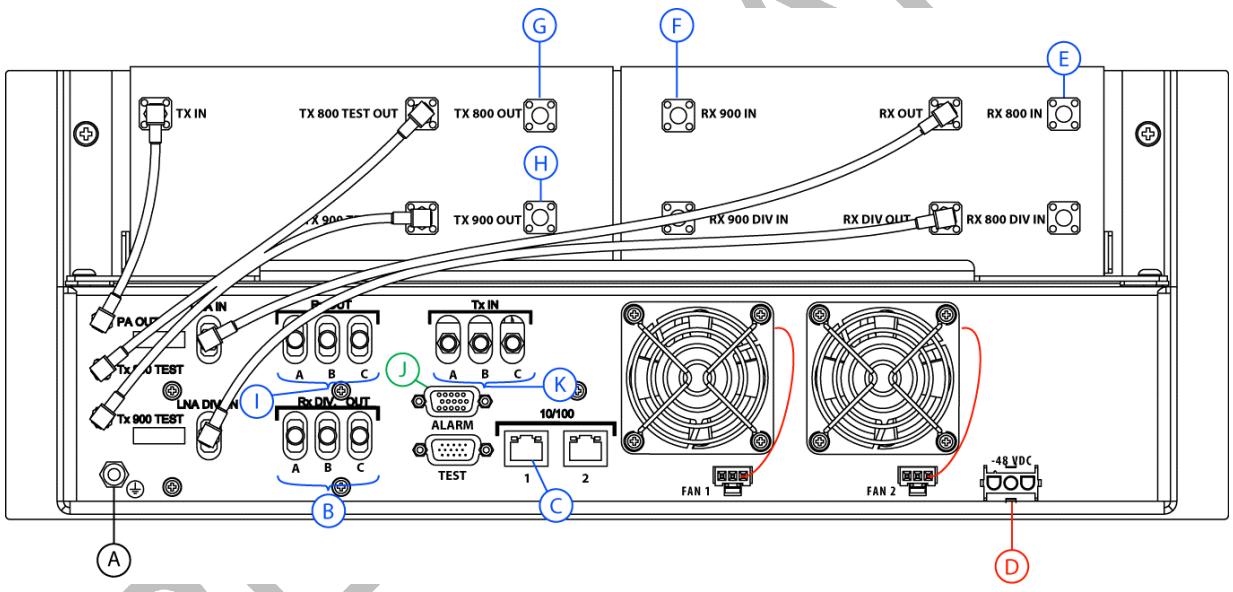

Table 6 Cable Connections for RF Shelf # 1, with Equivalent RFS2 and RFS3 Connections Noted

From RFS1:		To		
Index	**Label**	**Element**	**Label**	**Notes**
A	GND	BUS BAR	--	Ground, RF shelf #1 From RFS2 & 3: to BUS BAR
B-A	Rx DIV OUT A	--	--	Terminated, 50 Ω
B-B	Rx DIV OUT B	--	--	Terminated, 50 Ω
B-C	Rx DIV OUT C	--	--	Terminated, 50 Ω
C	10/100 Port 1	not	connected	Element Management, RF shelf #1 Important: From RFS1, 2 & 3: leave wrapped and unconnected; will be used with multi-channel RadioBlade (MCRB) transceiver
D	-48 VDC	PDU	RF 1	Power, RF shelf #1 -48 VDC From RFS2 & 3: to PDU RF 2 & RF 3, respectively
E	Rx 800 IN	TOR	Rx800-1	RF Rx 800-1, TOR From RFS2 & 3: to TOR RF Rx 800-2 & RF Rx 800-3, respectively
F	Rx 900 IN	TOR	Rx900-1	RF Rx 900-1, TOR From RFS2 & 3: to TOR RF Rx 900-2 & RF Rx 900-3, respectively
G	Tx 800 OUT	TOR	Tx800-1	RF Tx 800-1, TOR From RFS2 & 3: to TOR RF Tx 800-2 & RF Tx 800-3, respectively
H	Tx 900 OUT	TOR	Tx900-1	RF Tx 900-1, TOR RFS2 & 3: to RF TOR Tx 900-2 & RF Tx 900-3, respectively
I-A	Rx OUT A	RBS1	Rx A	RF Rx, RadioBlade Shelf #1 RFS2 & 3, terminated, 50 Ω
I-B	Rx OUT B	--	--	Terminated, 50 Ω From RFS2 to RBS1 RX B; RFS3, terminated, 50 Ω
I-C	Rx OUT C	--	--	Terminated, 50 Ω RFS2, terminated, 50 Ω; from RFS3 to RBS1 RX C
J	ALARM	RBS1	ALARM INPUT A	Alarm feed, RF shelf #1 From RFS2 & 3 to RBS1, ALARM INPUT B & C, respectively
K-A	Tx IN A	RBS1	Tx A	RF Tx, RadioBlade Shelf #1, A RFS2 & 3 terminated, 50 Ω
K-B	Tx IN B	--	--	Terminated, 50 Ω From RFS2 to RBS1 Tx B; RFS3, terminated, 50 Ω
K-C	Tx IN C	--	--	Terminated, 50 Ω RFS2, terminated, 50 Ω; from RFS3 to RBS1 Tx C

4. Select the 3 new 7 ft. CAT-5 cables and attach one end of each to 10/100 port 1 of each DBRFS. Leave the cable coiled and the other end not connected. This is the management cable for multi-channel RadioBlade® (MCRB) transceivers and must remain open until MCRBs are present in the rack.

   Note: Because of the additional RF cables, more clearance is needed in step 5. Be careful when routing the cable over the PDU rail. A strip of edge guard is supplied to buffer the cabling where it bends over the rail. Wedge the guard between the cables and rail to prevent chaffing.
   Also the top-most cable bracket on the right side of back of the cabinet may need to be moved from its original position to accommodate the additional cables.

5. Dress the new cabling on the right side at the back of the rack using cable brackets, cable ties and Velcro to secure all RF cables.

4.1.11 Power Up the Rack

Before starting the power-up procedure:

PRELIMINARY

- Verify that all breakers in the PDU are in the OFF position.
- Ensure that the power switches on the iSC-3s and the EAS are all in the OFF position.

1. Reconnect the powerplant to the PDU using the two two-hole terminal lugs detached in section 4.1.5.

   Note: The main power leads are customer supplied. Lug type is Panduit 2-hole, P/N LCD6-14A, or equivalent. Crimp tool needed: CT-1700.

2. Using the breakers on the PDU, turn up the equipment by completing the following steps, verifying that each component is operational before proceeding to the next step.
3. Using the breaker on the PDU and the power switch on the front of the primary iSC-3, turn up the primary iSC-3, and then verify that it is operational and that GPS lock has been established before proceeding. For more information, refer to the Motorola document *Gen 3 Site Controller System Manual*, 68P80801E30-O.
4. Using the breaker on the PDU and the power switch on the front of the EAS, turn up the EAS, and then verify that it is operational before proceeding.
5. Using the breaker on the PDU and the power switch on the front of the secondary iSC-3, turn up the secondary iSC-3, and verify that it is operational before proceeding.
6. Using the breaker on the PDU, turn up the CSU.
7. Configure the CSU according the manufacturer's documentation and Nextel standards.
8. Using the breaker on the PDU, turn up the BIC, AIC and RBS 1, and then verify that all three components are operational before proceeding.
9. Wait approximately 3 minutes for the following indications:
   - RBS: The STATUS LED for each group will turn green in this order: A, B and then C.
   - RBS: The RADIOBLADE TRANSCEIVER STATUS LEDs will turn red and then green for each present RadioBlade transceiver. If no RadioBlade transceiver is present, the LED will not light. To verify the contents of the RBS, pull out the shelf (powering off is not required) and inspect the RadioBlade transceivers and their respective status LEDs. Referring to Figure 12, reinsert the RBS. To do this, press up on one side rail locking arm and press down on the other side rail locking arm, and then push the unit into the rack.

Figure 12 Position of RadioBlade Shelf Locking Arms

- BIC CRIC and AIC CRIC: The POWER and STATUS LEDs will turn red and then green. All other BIC and AIC card LEDs will turn green.

PRELIMINARY

10. Using the breaker on the PDU, turn up RF Shelf 1, RF Shelf 2 and RF Shelf 3, and then verify that each RF shelf is operational before proceeding.
    The POWER and ALARM LEDs on the front of each RF shelf will turn green.

4.1.12 Adjust TOR Output Power

Refer to your notes (step 3, section 4.1.4, “Measure Output Power”) and restore the output power levels measured before performing the upgrade. TOR output power is covered in Appendix A.1, “RF Performance”.

Take your measurements at the same points you used in section 4.1.4, “Measure Output Power”. If adjustments are required, make them at the antenna (DAS) inputs. If the installation incorporates the universal attenuator shelf (Wienschel Universal DAS Panel, Item Master 25026), adjust power until the pre-upgrade level is measured.

Note: Look at individual carriers to ensure that there is enough gain. If the MC-Series system is underdriving the DAS, you can remove attenuation as needed from the universal attenuator shelf or you may need to call in OLCC or make a datafill change to get extra dB. If the MC-Series system is too “hot”, adjust attenuation or add a pad (e.g., 5 dB) at TOR.

PRELIMINARY

Appendix A. Specifications

A.1 RF Performance

Frequency

Table 7 Frequency of Operation

Band	Receive Frequency (MHz)	Transmit Frequency (MHz)
800E	806.0125 to 823.9875	851.0125 to 868.9875
900	896.01875 to 900.98125	935.01875 to 939.98125

Transmitter

Table 8 Transmitter Performance Summary

Parameter	Condition[1]	Value			Unit
		Min	Typ	Max	
Tx Output Power Level [2]	OMC Datafill: DefaultTxPower = 9.5	+8	+10	+12	dBm/ carrie r
Tx Output Power Control Range		-1	--	+10	dBm
Transmit port VSWR	Referenced to a 50 Ω impedance	--	--	2:1	--
Downlink Signal Quality Estimator (SQE)	Average value	--	30	--	dB
Occupied bandwidth	Per carrier	--	18.5	--	kHz
RF Frequency Tolerance (Tx)	Average frequency	--	--	± 50	Hz

Note 1: Unless otherwise stated, all values are referenced to the top of the rack.

Note 2: At maximum rated RF output power, all spurious and harmonic emissions should be at the noise floor. No combination of IM products or any other spurious emissions generated in the transmitting equipment should exceed the underlying noise floor in the operating band. Also, the Tx output power level is a function of the datafill parameters. The nominal maximum Tx power at the top of the rack with a maximum variation of ± 2 dB is +10 dBm. A TOR Tx power level of +10 dBm corresponds to an OMC datafill value of 9.5.

Tx Power Out Adjustment

The transmit power out at the top of the rack (TOR) is dependent on the iSC datafill. There are no changes in the way this power level is set for MC-Series systems that employ DBRFS units.

Table 9 TOR Output Power

defaultTxPower	TOR Tx Output (dBm)
8.4	-1
8.5	0
8.6	+1
8.7	+2

PRELIMINARY

defaultTxPower	TOR Tx Output (dBm)
8.8	+3
8.9	+4
9.0	+5
9.1	+6
9.2	+7
9.3	+8
9.4	+9
9.5	+10

Receiver

Table 10 Receiver Performance Summary

Parameter	Condition (NOTE 1)	Value			Unit
		Min	Typ	Max	
Rx Input Level	2% BER	–106	--	–36	dBm
	Absolute Maximum where no damage occurs	--	--	+10	dBm
Residual BER	Input signal of –80 dBm	--	--	0.1	%
Input IP3	Single channel input	–10	--	--	dBm

Note 1: Unless otherwise stated, all values are referenced to the top of the rack.

Spurious RF Emissions

The MC-Series iDEN Microcell system, using DBRFS units, will meet the emissions mask requirements per FCC Part 90, section 90.691.

Transmit Filter Characteristics

The specifications for the 800E and 900 MHz Tx filters are shown Table 11. In an MC-Series system, the pass-band ripple as seen at TOR is reduced from these specifications. This is accomplished by applying gain compensation coefficients to each BR.

PRELIMINARY

Table 11 Transmit Filter Specification—800 MHz Band

Parameter	Condition (NOTE 1)	Value			Unit
		Min	Typ	Max	
Pass Band		851.0125	--	868.9875	MHz
Pass Band Insertion Loss	Referenced to a 50 Ω impedance	0.5	0.75	2.5	dB
Pass Band Ripple	Peak to Peak referenced to a 50 Ω impedance	--	1.5	1.6	dB
Stop Band Attenuation	Referenced to a 50 Ω impedance at 849 MHz	–55	–60	--	dBc
Input Power		--	10	200	Watts
Return Loss		17.7	--	--	dB
RollOff DC-824 MHz		--	–75	--	dBc

Table 12 Transmit Filter Specification—900 MHz Band

Parameter	Condition (NOTE 1)	Value			Unit
		Min	Typ	Max	
Pass Band		935.0125	--	939.9875	MHz
Pass Band Insertion Loss	Referenced to a 50 Ω impedance	--	1.4	2.0	dB
Pass Band Ripple	Peak to Peak referenced to a 50 Ω impedance	--	--	--	dB
Stop Band Attenuation	Referenced to a 50 Ω impedance at 933 MHz	–55	–60	--	dBc
Input Power			10	200	Watts
Return Loss		17.7	--	--	dB
RollOff DC-824 MHz		--	–75	--	dBc

Receive Filter Characteristics

Note: Note: Frequency compensation is not needed in the DBRFS Rx path. Sufficient gain margin is designed into the MCRB to accommodate both 800 and 900 MHz operation.

PRELIMINARY

Table 13 Receive Filter Specifications—800 MHz Band

Parameter	Condition	Value			Unit
		Min	Typ	Max	
Pass Band		806.0125	--	823.9875	MHz
Pass Band Insertion Loss	Referenced to a 50 Ω impedance	--	--	1.0	dB
Pass Band Ripple	Referenced to a 50 Ω impedance	–0.5	--	+0.5	dB
Stop Band Attenuation	Referenced to a 50 Ω impedance at 750 MHz	–50	--	--	dBc

Table 14 Receive Filter Specifications—900 MHz Band

Parameter	Condition	Value			Unit
		Min	Typ	Max	
Pass Band		896.0125	--	900.9875	MHz
Pass Band Insertion Loss	Referenced to a 50 Ω impedance	--	--	2.0	dB
Pass Band Ripple	Referenced to a 50 Ω impedance	–0.6	--	+0.6	dB
Stop Band Attenuation	Referenced to a 50 Ω impedance at 894 MHz	–50	--	--	dBc

A.2 Physical

Dimensions

Table 15 MC-Series Dimensions

Supplier	Component	Equipment Dimensions			
		Width	Depth	Height	
RadioFrame Networks	cabinet	23.5”	25.5”	79”	42U
	BIC	19”	13”	7”	4U
	AIC	19”	13”	7”	4U
	RBS	19”	13”	7”	4U
	RF Shelf	19”	13”	7”	4U
	PDU	19”	10”	1.75”	1U
Non-RFN	iSC-3	19”	9”	1.75”	1U
	EAS	19”	15”	1.75”	1U
	CSU	19”	12.5”	1.75”	1U

PRELIMINARY

Weight

Table 16 MC-Series Component Weights

Supplier	Component	Weight
RadioFrame Networks	cabinet	579 lbs (shipped) 611 lbs (fully loaded)
	BIC	22 lbs
	AIC	22 lbs
	RBS	60 lbs (24 RadioBlade transceivers)
	Dual-Band RF Shelf	49 lbs each
	Single-Band RF Shelf	35 lbs each
	PDU	10 lbs
Non-RFN	iSC-3	16 lbs (8 lbs each)
	EAS	6 lbs
	CSU	10 lbs

Power

Table 17 DC Power

Parameter	Condition	Value			Unit
		Min	Typ	Max	
Supply Voltage		-42	-48	-54	Volts
Power	3 sectors, 24 BR's, with receive diversity	-	600	800	Watts

Environmental

Table 18 Environmental Specifications

Parameter	Condition	Value			Unit
		Min	Typ	Max	
Ambient Temperature	Normal operation	0	27	40	°C
	Storage	-40		+70	°C
Humidity	Normal operation relative, non-condensing	10		90	%
	Storage, non-condensing	5		90	%
Altitude	Relative to mean sea level.	-60		1800	m
Shock		40			G
Vibration	Level 4 earthquake; meets or exceeds GR-63-CORE Earthquake Environment NEBS requirements	99.9			% pass
UL Pollution	Degree 3	99.9			% pass
Transport Vibration	NSTA, ISTA compliant	99.9			% pass

PRELIMINARY

Compliance

The MC-Series system will meet the following safety and compliance specifications.

Table 19 Agency Compliances

Parameter	Applicable Standard
FCC	CFR 47, Part 90
UL	UL60950

PRELIMINARY

Appendix B. Acronyms

Term	Definition
800E	Extended 800 MHz Band (800S+800U)
BER	Bit Error Rate
BR	Base Radio
CALEA	Communications Assistance for Law Enforcement Act
CAT5	Category 5 (Cable)
DAS	Distributed Antenna System
EBRC	Enhance Base Radio Controller
EBTS	Enhanced Base Transceiver System
FCC	Federal Communication Commission
FNE	Fixed Network Equipment
FOA	First Office Application
FORNet	Fiber Optic Repeater Network
FRU	Field Replaceable Unit
GR	General Release
GUI	Graphical User Interface
Hz	Hertz
iDEN	Integrated Digital Enhanced Network
IM	Inter Modulation
INI	Interference and Noise Indicator
IP3	3rd order Inter-modulation Product
ISC	Integrated Site Controller
KHz	Kilohertz
LAN	Local Area Network
MCRB	Multi-Channel RadioBlade
MHz	Megahertz
MOP	Method of Procedure
MS	Mobile Station
MTBF	Mean Time Between Failures
OLCC	On Line Configuration Change
OMC	Operations and Management Center
OMC-R	Operations and Management Center, Radio Subnetwork
PCCH	Primary Control Channel
PDU	Power Distribution Unit
RB	RadioBlade
RF	Radio Frequency
RFN	RadioFrame Networks
RSSI	Received Signal Strength Indicator

PRELIMINARY

Term	Definition
RX	Receive
SCCH	Secondary Control Channel
SNMP	Simple Network Management Protocol
SQE	Signal Quality Estimator
SR	Software Release
TBD	To be determined
TOR	Top of the Rack
TRD	Technical Requirements Document
TX	Transmit
UL	Underwriters Laboratories
WiDEN	Wideband iDEN

PRELIMINARY

Appendix C. iDEN Microcell Rack Stack-Up, Dual-Band 3-Sector (Factory Default) Configuration

MC-Series system cables are labeled with their terminuses at each end. They are routed, dressed and secured along the side of the system cabinet.

This appendix gives representations of intra-cabinet cabling for your reference. Table 20 through Table 28 list the connections for each component in the fully populated dual-band MC-Series system. Figure 13 through Figure 16 show power, RF and data path connectivity for the system. Cables are shown splayed for clarity. The tables, which provide references for all connections, are keyed to the figures by Index codes. Please note that the Index codes have significance only within this appendix and do not correspond to cable or port labeling. Some connections are indicated in the figures only by destination Index. This is done if cabling is very similar to connections shown, and additional lines would clutter the diagrams.

Table 20 Cable Connections, Top of Rack Dual-Band Bulkhead, 3-Sector Configuration

From TOR:		To		
Index	**Label**	**Index**	**Label**	**Notes**
A	GND	--	--	To site ground; cable is customer supplied; lug is customer supplied—specified to be Panduit 2-hole, PN LCD6-14A, or equivalent
B	Tx800-3	RFS3:L	Tx 800 OUT	RF Tx 800, RF shelf # 3
C	Rx800-3	RFS3:I	Rx 800 IN	RF Rx 800, RF shelf # 3
D	Tx900-3	RFS3:AA	Tx 900 OUT	RF Tx 900, RF shelf # 3
E	Rx900-3	RFS3:K	Rx 900 IN	RF Rx 900, RF shelf # 3
F	Rx900-2	RFS2:K	Rx 900 IN	RF Rx 900, RF shelf # 2
G	Rx900-1	RFS1:K	Rx 900 IN	RF Rx 900, RF shelf # 1
H	Tx900-1	RFS1:AA	Tx 900 OUT	RF Tx 900, RF shelf # 1
I	Rx800-1	RFS1:I	Rx 800 IN	RF Rx 800, RF shelf # 1
J	Tx800-1	RFS1:L	Tx 800 OUT	RF Tx 800, RF shelf # 1
K	GPS1	iSC1:C	GPS	RF GPS, iSC # 1
L	GPS2	iSC2:C	GPS	RF GPS, iSC # 2
M	800-DIV-3	RFS3:X	Rx 800 DIV IN	RF Rx 800, diversity; **connected only to TOR**. See NOTE 1.
N	800-DIV-2	RFS2:X	Rx 800 DIV IN	RF Rx 800, diversity; **connected only to TOR**. See NOTE 1.
O	900-DIV-3	RFS3:Z	Rx 900 DIV IN	RF Rx 900, diversity; **connected only to TOR**. See NOTE 1.
P	900-DIV-1	RFS1:Z	Rx 900 DIV IN	RF Rx 900, diversity; **connected only to TOR**. See NOTE 1.
Q	900-DIV-2	RFS2:Z	Rx 900 DIV IN	RF Rx 900, diversity; **connected only to TOR**. See NOTE 1.
R	800-DIV-1	RFS1:X	Rx 800 DIV IN	RF Rx 800, diversity; **connected only to TOR**. See NOTE 1.
S	Tx800-2	RFS2:L	Tx 800 OUT	RF Tx 800, RF shelf # 2
T	Rx800-2	RFS2:I	Rx 800 IN	RF Rx 800, RF shelf # 2
U	Tx900-2	RFS2:AA	Tx 900 OUT	RF Tx 900, RF shelf # 2

NOTE 1: Reserved for receive diversity option.

PRELIMINARY

Figure 13 TOR Cabling (Underside View), Dual-Band 3-Sector MC-Series System

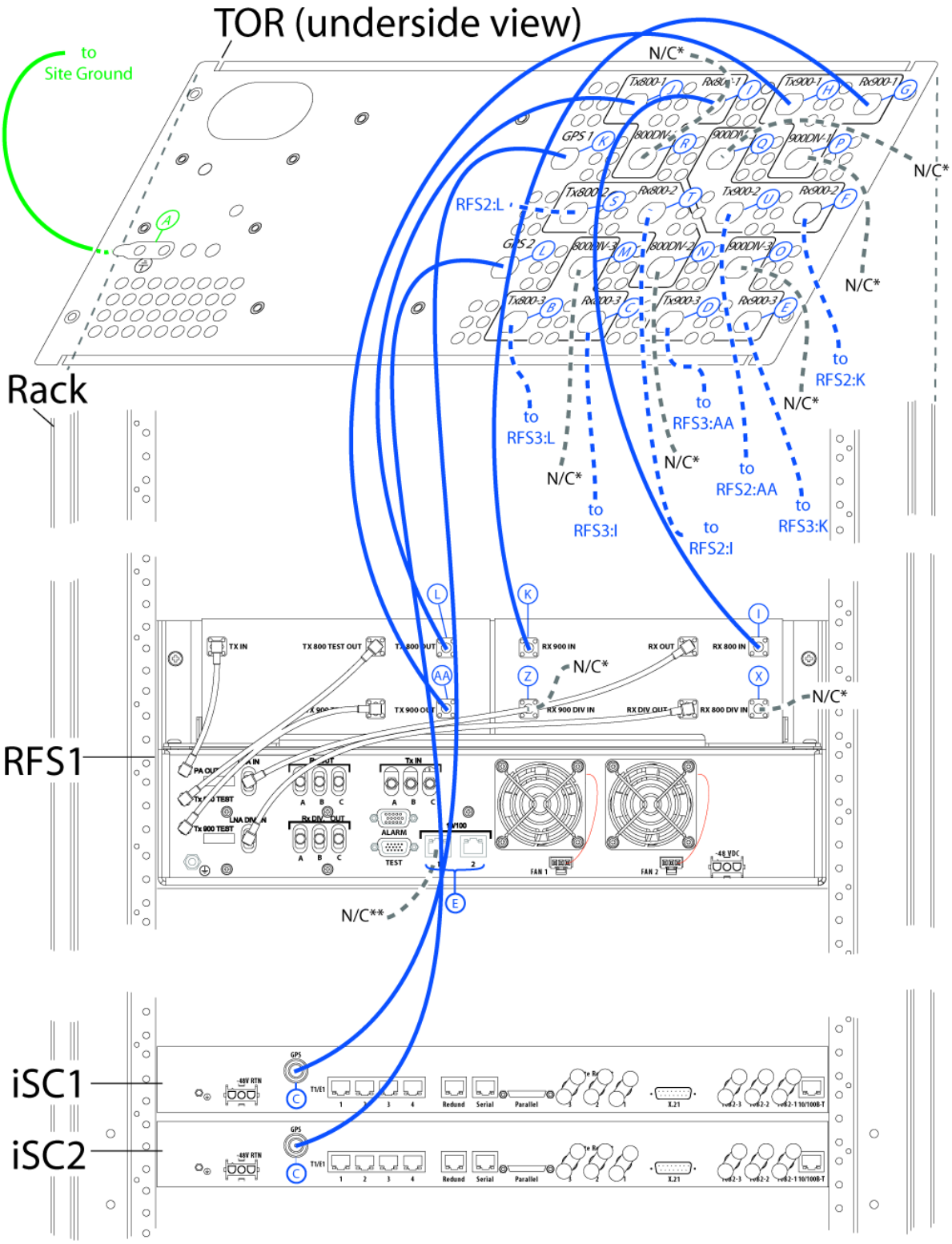

* These ports are reserved for receive diversity option. Leave cables attached only to TOR and secured.
** These ports are reserved for the MCRB option. Leave cables attached only to RF shelves and secured.

Table 21 Cable Connections, RF Shelf, Dual-Band 3-Sector Configuration

From RFS1:		To		
Index	**Label**	**Index**	**Label**	**Notes**
A	GND	Rack:B	--	Ground, RF shelf #1
B	LNA DIV IN	RFS1:Y	Rx DIV OUT	RF receive diversity
C-A	Rx DIV OUT A	--	--	Terminated, 50 Ω. See NOTE 1.
C-B	Rx DIV OUT B	--	--	Terminated, 50 Ω. See NOTE 1.
C-C	Rx DIV OUT C	--	--	Terminated, 50 Ω. See NOTE 1.
D	TEST			Not connected
E1	10/100 1	BIC:E5	ERTM Port 5	RF shelf #1 Status/Config.; **connected only to RF Shelf #1**. See NOTE 2.
E2	10/100 2			Not connected
F	FAN 1	RFS1:V	--	Power, RF shelf #1, fan #1
G	FAN 2	RFS1:W	--	Power, RF shelf #1, fan #2
H	–48 VDC	PDU:E	RF 1	Power, RF shelf #1 –48 VDC
I	Rx 800 IN	TOR:I	Rx800-1	RF Rx 800, TOR
J	Rx OUT	RFS1:R	LNA IN	RF Rx, LNA
K	Rx 900 IN	TOR:G	Rx900-1	RF Rx 900, TOR
L	Tx 800 OUT	TOR:J	Tx800-1	RF Tx 800, TOR
M	Tx 800 TEST OUT	RFS1:P	Tx 800 TEST	RF Tx 800, test
N	Tx IN	RFS1:O	PA OUT	RF Tx, PA
O	PA OUT	RFS1:N	Tx IN	RF Tx, PA
P	Tx 800 TEST	RFS1:M	Tx 800 TEST OUT	RF Tx 800, test
Q	Tx 900 TEST	RFS1:BB	Tx 900 TEST OUT	RF Tx 900, test
R	LNA IN	RFS1:J	Rx OUT	RF Rx, LNA
S-A	Rx OUT A	RBS:T	Rx A	RF Rx, RadioBlade shelf, group A
S-B	Rx OUT B	--	--	Terminated, 50 Ω. See NOTE 3.
S-C	Rx OUT C	--	--	Terminated, 50 Ω. See NOTE 3.
T	ALARM	RBS:K	ALARM INPUT A	Alarm feed, RF shelf #1. See NOTE 4.
U-A	Tx IN A	RBS:N	Tx A	RF Tx, RadioBlade shelf, group A
U-B	Tx IN B	--	--	Terminated, 50 Ω. See NOTE 5.
U-C	Tx IN C	--	--	Terminated, 50 Ω. See NOTE 5.
V	--	RFS1:F	FAN 1	Power, RF shelf #1, fan #1
W	--	RFS1:G	FAN 2	Power, RF shelf #1, fan #2
X	Rx 800 DIV IN	TOR:R	800-DIV-1	RF Rx 800 diversity; **connected only to TOR**. See NOTE 6.
Y	Rx DIV OUT	RFS1:B	LNA DIV IN	RF Rx, LNA diversity
Z	Rx 900 DIV IN	TOR:P	900-DIV-1	RF Rx 900 diversity; **connected only to TOR**. See NOTE 6.
AA	Tx 900 OUT	TOR:H	Tx900-1	RF Tx 900, TOR
BB	Tx 900 TEST OUT	RFS1:Q	Tx 900 TEST	RF Tx 800, test

NOTE 1: These ports are reserved for the receive diversity upgrade. Leave terminated in system without receive diversity.
NOTE 2: The RF Shelf Status/Config segment will be used in conjunction with MCRB. Leave connected and secured, but do not connect to BIC in system not upgraded for MCRB. Software upgrade required.
NOTE 3: RF shelf #2 S-B and RF shelf #3 S-C, respectively, connected to RBS Rx B and Rx C.
NOTE 4: RF shelf #2 T and RF shelf #3 T, respectively, connected to RBS ALARM INPUT B and ALARM INPUT C.
NOTE 5: RF shelf #2 U-B and RF shelf #3 U-C, respectively, connected to RBS Tx B and Tx C.
NOTE 6: This connector is reserved for the receive diversity upgrade. Leave cable disconnected.

PRELIMINARY

Table 22 Cable Connections, RadioBlade Shelf, Dual-Band 3-Sector Configuration

From RBS:		To		
Index	**Label**	**Index**	**Label**	**Notes**
A	GND	Rack:E	--	Ground, RadioBlade shelf
B	10/100 RFN C	AIC:G3	ERTM PORT 3	Traffic path, Group C
C	ALARM INPUT C	RFS 3:T	ALARM	Alarm feed, RF shelf #3
D	FAN C	RBS:S	--	Power, RadioBlade shelf, fan C
E	POWER	PDU:J	RBS 1	Input power from power distribution unit
F	10/100 RFN B	AIC:G2	ERTM PORT 2	Traffic path, Group B
G	ALARM INPUT B	RFS 2:T	ALARM	Alarm feed, RF shelf #2
H	FAN B	RBS:Q	--	Power, RadioBlade shelf, fan B
I	REF CLOCK			Not connected
J	10/100 RFN A	AIC:G1	ERTM PORT 1	Traffic path, Group A
K	ALARM INPUT A	RFS 1:T	ALARM	Alarm feed, RF shelf #1
L	FAN A	RBS:O	--	Power, RadioBlade shelf, fan A
M	Rx A	RFS1:S-A	Rx OUT A	RF Rx, Group A
N	Tx A	RFS1:U-A	Tx IN A	RF Tx, Group A
O	--	RBS:L	FAN A	Power, RBS shelf, fan A
P	Tx B	RFS2:U-B	Tx IN B	RF Tx, Group B
Q	--	RBS:H	FAN B	Power, RBS shelf, fan B
R	Tx C	RFS3:U-C	Tx IN C	RF Tx, Group C
S	--	RBS:D	FAN C	Power, RBS shelf, fan C
T	Rx C	RFS3:S-C	Rx OUT C	RF Rx, Group C
U	Rx B	RFS2:S-B	Rx OUT B	RF Rx, Group B

PRELIMINARY

Figure 14 RFS to RBS RF Cabling, 3-Sector Dual-Band MC-Series System

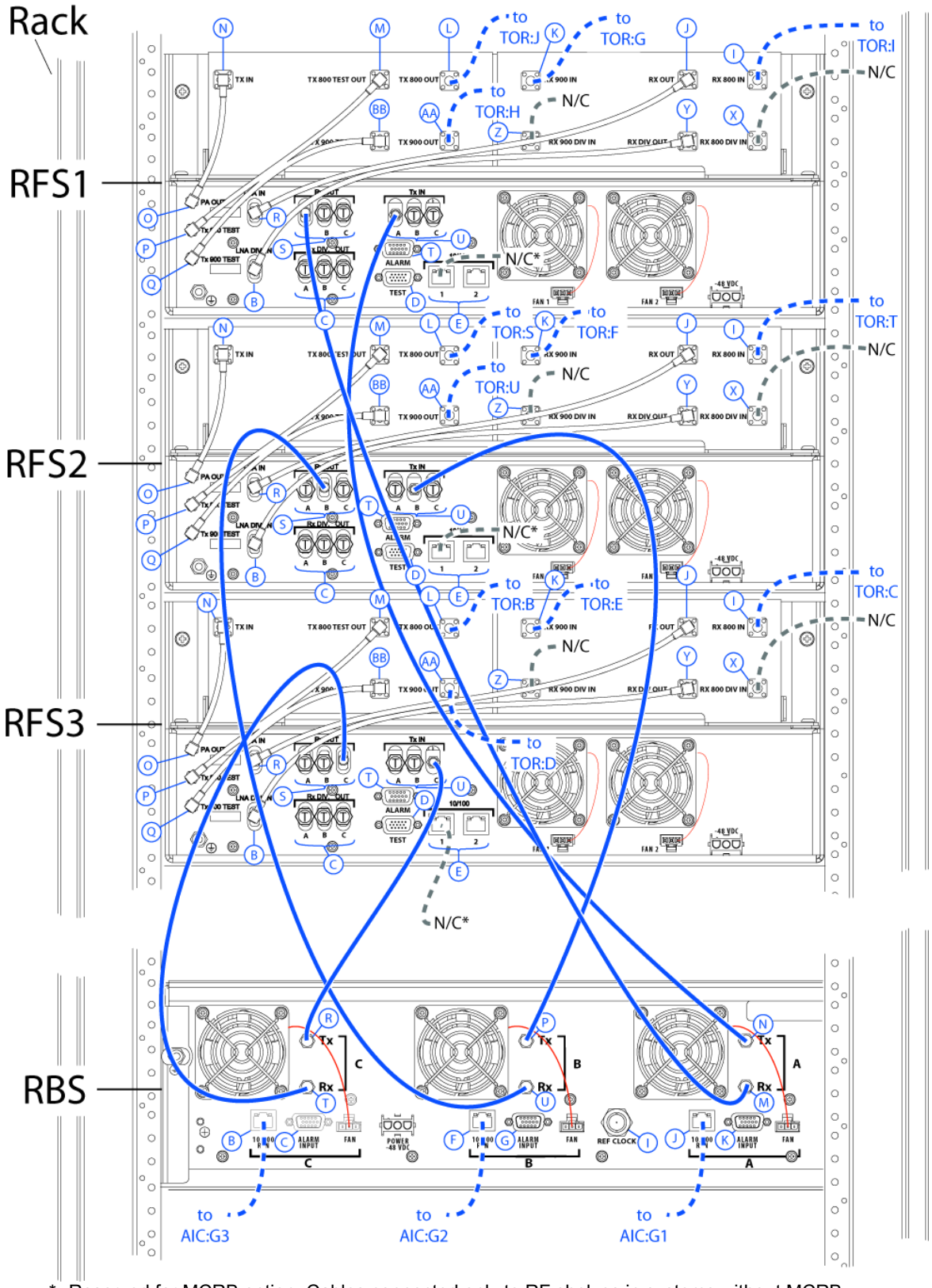

* Reserved for MCRB option. Cables connected only to RF shelves in systems without MCRB.

Table 23 Cable Connections, PDU, Dual Band 3-Sector Configuration

From PDU:		To		
Index	**Label**	**Index**	**Label**	**Notes**
A	GND	Rack:A	--	Ground, power distribution unit
B	–48VDC	--	--	Power, MC-Series rack; cable is customer supplied; lug is customer supplied—specified to be Panduit 2-hole, PN LCD6-14A, or equivalent
C	RETURN			
D	STATUS	EAS:J	CONTROL	Alarm feed, environmental alarm system
E	RF 1	RFS1:H	–48 VDC	Power, RF shelf #1
F	RF 2	RFS2:H	–48 VDC	Power, RF shelf #2
G	RF 3	RFS3:H	–48 VDC	Power, RF shelf #3
H	RBS 3			Not connected
I	RBS 2			Not connected
J	RBS 1	RBS:E	POWER	Power, RadioBlade shelf
K	CSU	CSU:B	--	Power, CSU
L	CTRL 1	iSC1:B	–48 V	Power, primary iSC
M	CTRL 2	iSC2:B	–48 V	Power, secondary iSC
N	EAS	EAS:B	–48 V	Power, environmental alarm system
0	BIC	BIC:D	--	Power, BTS interface chassis
P	AIC	AIC:B	--	Power, airlink interface chassis
Q	AUX			Not connected

Power and ground cabling for a fully populated system are illustrated in Figure 15 and Figure 16.

PRELIMINARY

Figure 15 Power and Ground Connections, MC-Series System, Fully Populated

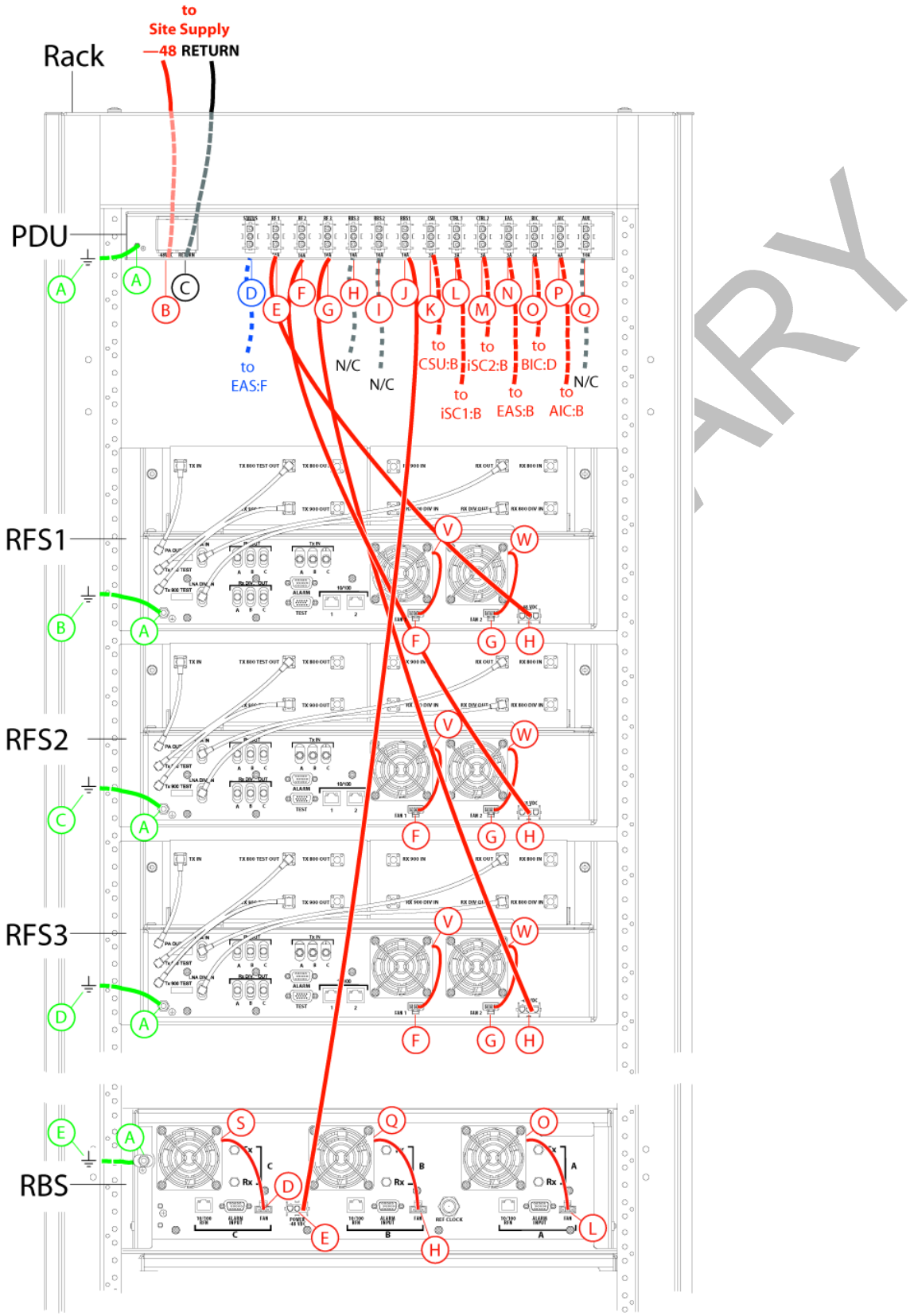

Table 24 Cable Connections, CSU, Dual Band 3-Sector Configuration

From CSU: (NOTE 1)		To		
Index	**Label**	**Index**	**Label**	**Notes**
A	GND	Rack:G	--	Ground, CSU
B	-48 V	PDU:K	CSU	Power, primary iSC
C-1 to C-8	LOW SPEED DATA			See NOTE 1.
D	HIGH SPEED DATA 2			See NOTE 1.
E	10/100 ETHERNET			See NOTE 1.
F	MEASUREMENT INPUTS			See NOTE 1.
G	INPUTS/RELAY			See NOTE 1.
H	CONTACT OUTPUTS			See NOTE 1.
I	T1/E1			See NOTE 1.
J	HIGH SPEED DATA 2			See NOTE 1.

NOTE 1: Connections external to the MC-Series system not shown. Configure the CSU according to the manufacturer's documentation and Sprint Nextel standards.

PRELIMINARY

Table 25 Cable Connections, Primary iSC, Dual-Band 3-Sector Configuration

From iSC1: (NOTE 1)		To		
Index	**Label**	**Index**	**Label**	**Notes**
A	GND	Rack:H	--	Ground, primary iSC; see NOTE 2.
B	-48 V	PDU:L	CTRL 1	Power, primary iSC; see NOTE 3.
C	GPS	TOR:L	GPS 1	RF GPS, primary iSC; see NOTE 4.
D-1	T1/E1 1	Splitter in line. See Note at right.		To splitter—daisy chained to secondary iSC, port T1/E1:1
D-2	T1/E1 2	Daisy chained. See Note at right.		To daisy chain—splitter at secondary iSC, port T1/E1:2
D-3	T1/E1 3			Not connected
D-4	T1/E1 4			Not connected
E	REDUND	iSC2:E	REDUND	Jumper to secondary iSC for redundancy
F	SERIAL			Not connected
G	PARALLEL	EAS:D	CONTROLLER A	
H	SITE REF OUT 3	iSC2:H	SITE REF OUT 3	Terminated BNC-Y; directly connected to port at iSC2:H
I	SITE REF OUT 2	iSC2:I	SITE REF OUT 2	Terminated BNC-T at either end
J	SITE REF OUT 1	iSC2:J	SITE REF OUT 1	Terminated BNC-T at either end
K	X.21			Not connected
L	10B2-3	iSC2:L	10B2-3	Terminated BNC-T at either end
M	10B2-2	iSC2:M	10B2-2	Terminated BNC-T at either end
N	10B2-1	iSC2:N	10B2-1	Terminated BNC-T at either end
O	10/100BT	iSC2:O	10/100BT	10/100B-T jumper

NOTE 1: Connections external to the MC-Series system not shown. Configure the primary and secondary iSC according to the manufacturer's documentation and Sprint Nextel standards.
NOTE 2: Secondary iSC ground to rack (Index Rack:I in Figure 16).
NOTE 3: Secondary iSC power to PDU (Index PDU:M in Figure 15).
NOTE 4: Secondary iSC GPS to TOR (Index TOR:L in Figure 13).

PRELIMINARY

Table 26 Cable Connections, EAS, Dual-Band 3-Sector Configuration

From EAS: (NOTE 1)		To		
Index	**Label**	**Index**	**Label**	**Notes**
A	GND	Rack:J	--	Ground, EAS
B	–48 V	PDU:N	EAS	Power, EAS
C	USER ALARM CONTROL			Not connected
D	CONTROLLER A	iSC1:G	PARALLEL	Motorola cable PN
E	CONTROLLER B	iSC2:G	PARALLEL	Motorola cable PN
F	RF 2			Not connected
G	RF 3			Not connected
H	SYSTEM ALARM/CONTROL			Not connected
I	RF 1			Not connected
J	CONTROL	PDU:D	STATUS	Alarm, PDU

NOTE 1: Connections external to the MC-Series system not shown. Configure the EAS according to the manufacturer's documentation and Sprint Nextel standards.

Table 27 Cable Connections, BIC, Dual-Band 3-Sector Configuration

From BIC:		To		
Index	**Label**	**Index**	**Label**	**Notes**
A	GND	Rack:K	--	Ground, BTS Interface Chassis
B	CRTC2 10BASE2 – ISC	ISC1:N	10B2-1	Converted 10Base2 traffic path
C	CRTC2 10BASET – ISC	BIC:I-1	ERTM PORT 1	BIC ERTM to BIC CRTC
D	PO	PDU:O	BIC	Input power from power distribution unit
E-8	ERTM PORT 8	--	--	Remote management; external connection to DNX-1U (smart CSU)
E-7	ERTM PORT 7	RFS3:E1	10/100 Port 1	Not connected. See NOTE 1.
E-6	ERTM PORT 6	RFS2:E1	10/100 Port 1	Not connected. See NOTE 1.
E-5	ERTM PORT 5	RFS1:E1	10/100 Port 1	Not connected. See NOTE 1.
F	GPS ANT			Not connected
G	5MHz/1PPS OUT			Not connected
H	5MHz/1PPS IN	iSC1:J	Site Ref Out 1	Reference clock
I-4	ERTM PORT 4			Not connected
I-3	ERTM PORT 3			Not connected
I-2	ERTM PORT 2	AIC:G-4	ERTM PORT 4	AIC ERTM to BIC ERTM
I-1	ERTM PORT 1	BIC:C	10BASET – ISC	BIC ERTM to BIC CRTC

NOTE 1: ERTM ports 5 – 7 remain open until MCRB upgrade. The cables are connected to respective RFS 10base 10/100 port 1 and secured.

PRELIMINARY

Table 28 Cable Connections, AIC, Dual Band, 3-Sector Configuration

From AIC:		To		
Index	**Label**	**Index**	**Label**	**Notes**
A	GND	Rack:L	--	Ground, Airlink Interface Chassis
B	PO	PDU:P	AIC	Input power from power distribution unit
C-8	ERTM PORT 8			Not connected
C-7	ERTM PORT 7			Not connected. See NOTE 1.
C-6	ERTM PORT 6			Not connected. See NOTE 1.
C-5	ERTM PORT 5			Not connected. See NOTE 1.
D	GPS ANT			Not connected
E	5MHz/1PPS OUT			Not connected
F	5MHz/1PPS IN			Not connected
G-4	ERTM PORT 4	BIC:I-2	ERTM PORT 2	AIC ERTM to BIC ERTM
G-3	ERTM PORT 3	RBS:B	C 10/100 RFN	Traffic path, Group C
G-2	ERTM PORT 2	RBS:F	B 10/100 RFN	Traffic path, Group B
G-1	ERTM PORT 1	RBS:J	A 10/100 RFN	Traffic path, Group A

NOTE 1: These ports are reserved for receive diversity option.

PRELIMINARY

Figure 16 Cabling, Site Controller and Interface Chasses, Dual-Band 3-Sector MC-Series System

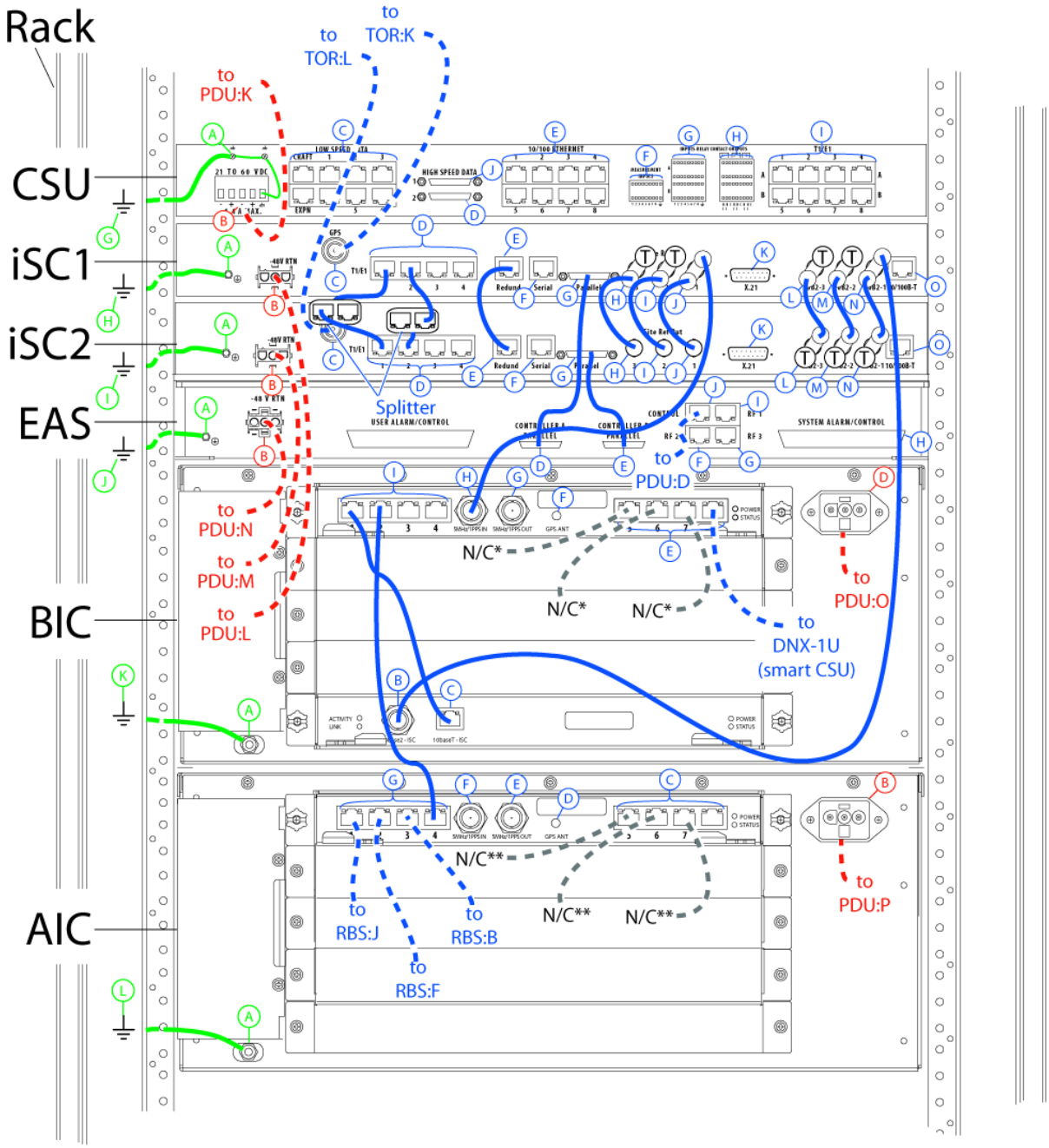

* These ports are reserved for the MCRB option. In systems without MCRB, leave cables attached only to RF shelves and secured.

** These ports are reserved for receive diversity option.

Appendix D. Dangerous RF Emissions Precautions

Warning!

The MC-Series system has been approved for antennas up to +20 dBi. At energy levels within the approved range, operation may present hazards to life and health.

RF emission level is a function of the installation. Accordingly, it is the responsibility of the equipment owner, and not RadioFrame Networks, Inc., to apply signage to the site if it is required under 47 CFR 1.1310.

Please carefully read and observe the following warnings!

This equipment is designed to generate and radiate radio frequency (RF) energy by means of an external antenna. When terminated into a non-radiating RF load, the base station equipment is certified to comply with Federal Communications Commission (FCC) regulations pertaining to human exposure to RF radiation in accordance with the FCC Rules Part 1 section 1.1310 as published in title 47 code of federal regulations and procedures established in TIA/EIA TSB92, Report on EME Evaluation for RF Cabinet Emissions Under FCC MPE Guidelines, Compliance to FCC regulations of the final installation should be assessed and take into account site specific characteristics such as type and location of antennas, as well as site accessibility of occupational personnel (controlled environment) and the general public (uncontrolled environment). This equipment should only be installed and maintained by trained technicians. Licensees of the FCC using this equipment are responsible for insuring that its installation and operation comply with FCC regulations Part 1 section 1.1310 as published in title 47 code of federal regulations. Whether a given installation meets FCC limits for human exposure to radio frequency radiation may depend not only on this equipment but also on whether the “environments” being assessed are being affected by radio frequency fields from other equipment, the effects of which may add to the level of exposure.

Accordingly, the overall exposure may be affected by radio frequency generating facilities that exist at the time the licensee’s equipment is being installed or even by equipment installed later. Therefore, the effects of any such facilities must be considered in site selection and in determining whether a particular installation meets the FCC requirements. FCC OET Bulletin 65 provides materials to assist in making determinations if a given facility is compliant with the human exposure to RF radiation limits. Determining the compliance of transmitter sites of various complexities may be accomplished by means of computational methods. For more complex sites direct measurement of power density may be more expedient. Persons responsible for installation of this equipment are urged to consult the listed reference material to assist in determining whether a given installation complies with the applicable limits. In general the following guidelines should be observed when working in or around radio transmitter sites:

Warning!

All personnel should have electromagnetic energy awareness training.

Warning!

All personnel entering the site must be authorized.

PRELIMINARY

Warning! Obey all posted signs.

Warning! Assume all antennas are active.

Warning! Before working on antennas, notify owners and disable appropriate transmitters.

Warning! Maintain minimum 3 feet clearance from all antennas.

Warning! Do not stop in front of antennas.

Warning! Use personal RF monitors while working near antennas.

Warning! Never operate transmitters without shields during normal operation.

PRELIMINARY

Warning! Do not operate base station antennas in equipment rooms.

PRELIMINARY