深圳汉阳天线设计有限公司
Shenzhen Hanyang Antenna Design Co. Ltd.

- 深圳市宝安区前进二路宝运达物流信息大厦12A10/12A11
- 青岛市崂山区松岭路399号海信产业园A1号楼606
电话：0755-23069700 传真：0755-23069700

P/N: HY160808 SRF08

✓ Features:

1. Surface mounted element with a small dimension of 1.6 × 0.8 × 0.8 mm meet future miniaturization trend.
2. Embedded and LTCC (low temperature co-fired ceramic) technology is able to integrate with system design as well as beatifying the housing of final product.
3. Miniaturization, wideband, high stability, low ESR, and low tolerance.
4. Dual-band resonances in the dominant and harmonic modes enables multiband operations.
5. Novel ground-radiation technique enables radiation from both the antenna and the ground plane.

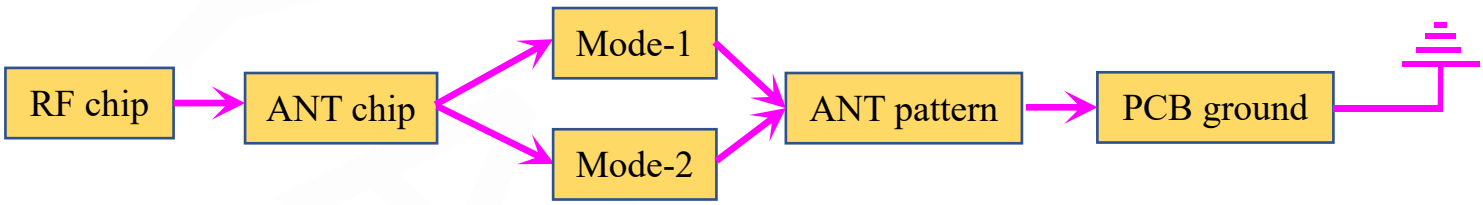

✓ Applications:

1. Bluetooth
2. Dual-band WLAN

✓ Dimensions (Unit: mm)

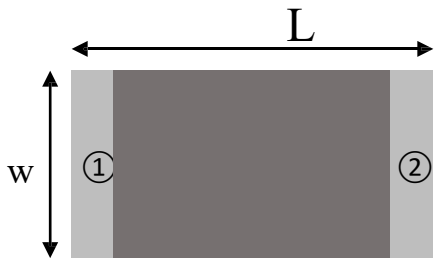

(Top View)

Number	Terminal Name
①	INPUT
②	NC

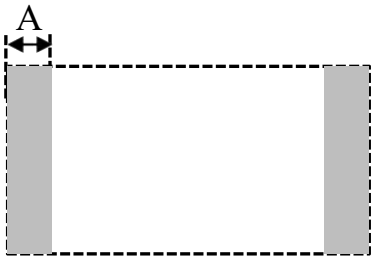

(Bottom View)

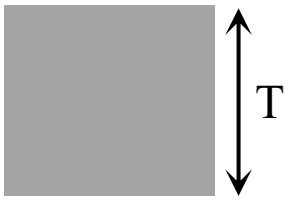

(Side View)

Symbols	L	W	T	A
Dimensions	1.60±0.20	0.80±0.20	0.80±0.20	0.30±0.10

Hanyang Antenna Design Co. Ltd. has possession of proprietary information provided in this report and this proprietary information shall be kept in strict confidence and not disclosed to any person or firm without the prior written consent of Hanyang Antenna Design Co. Ltd.

▪ 深圳市宝安区前进二路宝运达物流信息大厦12A10/12A11
▪ 青岛市崂山区松岭路399号海信产业园A1号楼606
电话：0755-23069700 传真：0755-23069700

P/N: HY160808 SRF08

✓ Layout-1 (3.5mm×6.5mm)

Top layer:

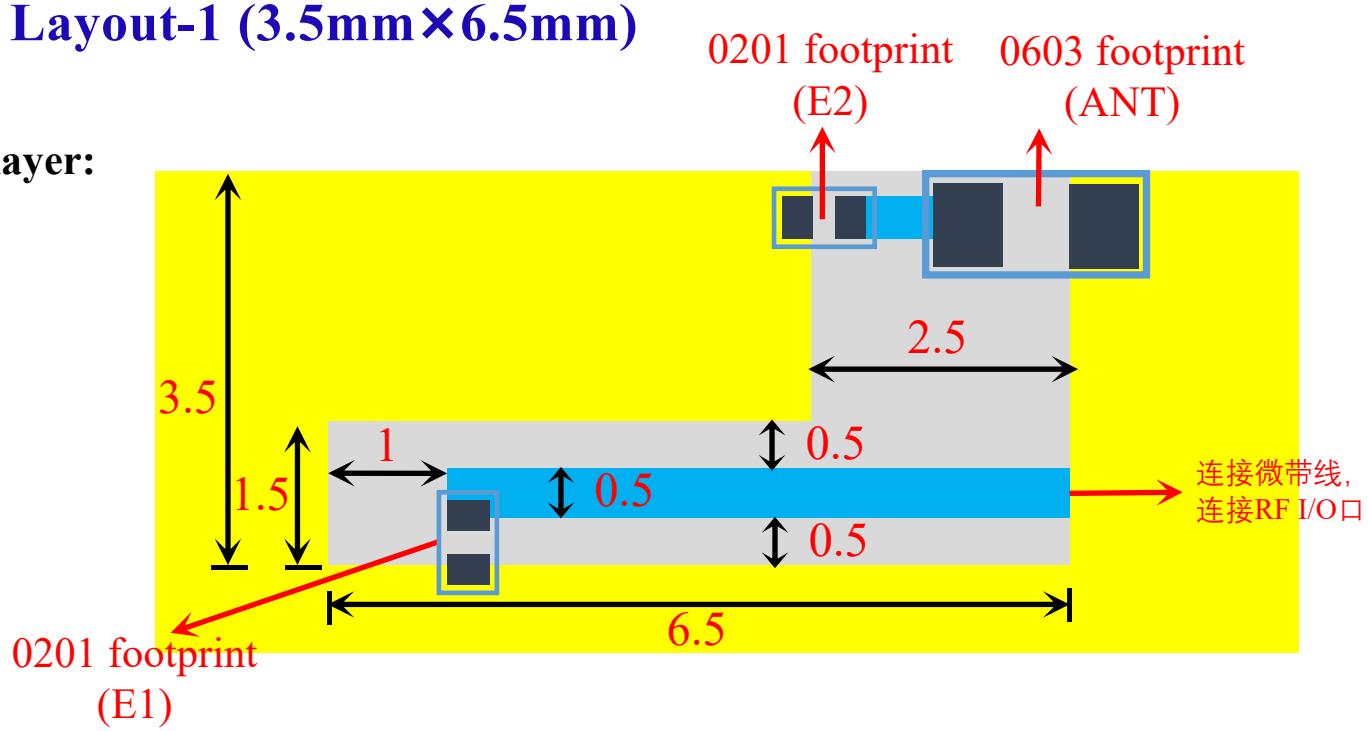

Bottom layer:

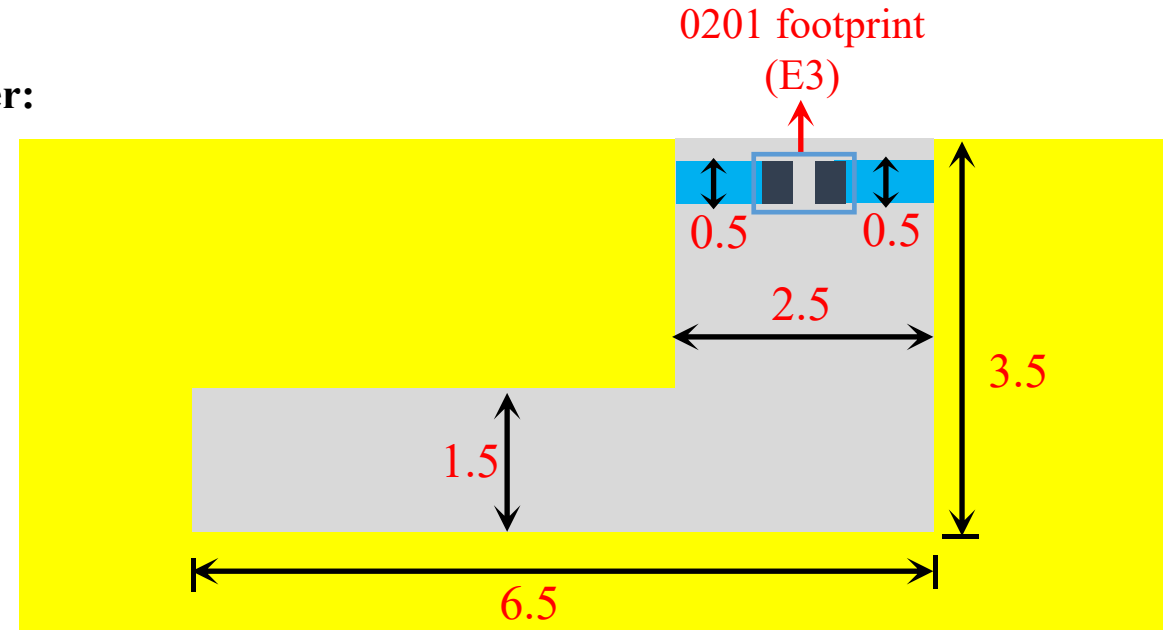

Equivalent circuit:

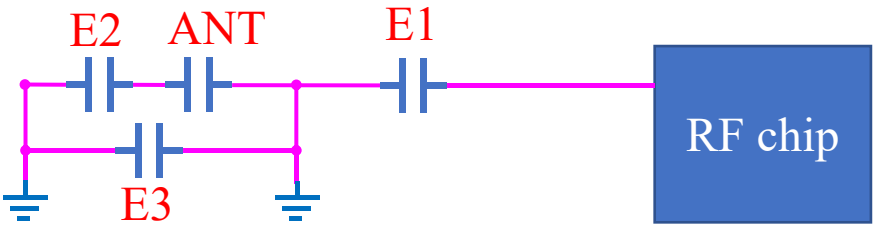

Hanyang Antenna Design Co. Ltd. has possession of proprietary information provided in this report and this proprietary information shall be kept in strict confidence and not disclosed to any person or firm without the prior written consent of Hanyang Antenna Design Co. Ltd.

▪ 深圳市宝安区前进二路宝运达物流信息大厦12A10/12A11
▪ 青岛市崂山区松岭路399号海信产业园A1号楼606
电话：0755-23069700 传真：0755-23069700

P/N: HY160808 SRF08

✓ Layout-2 (1.5mm×10mm)

Top layer:

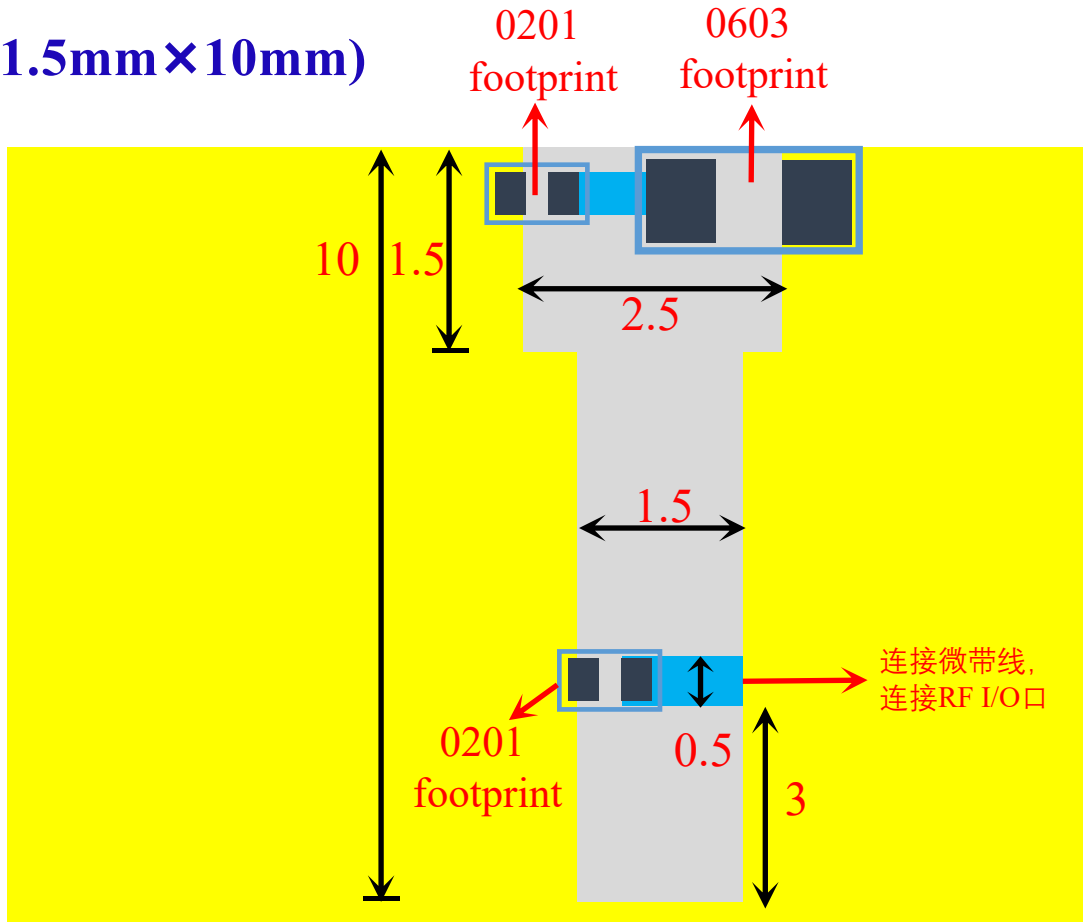

Bottom layer:

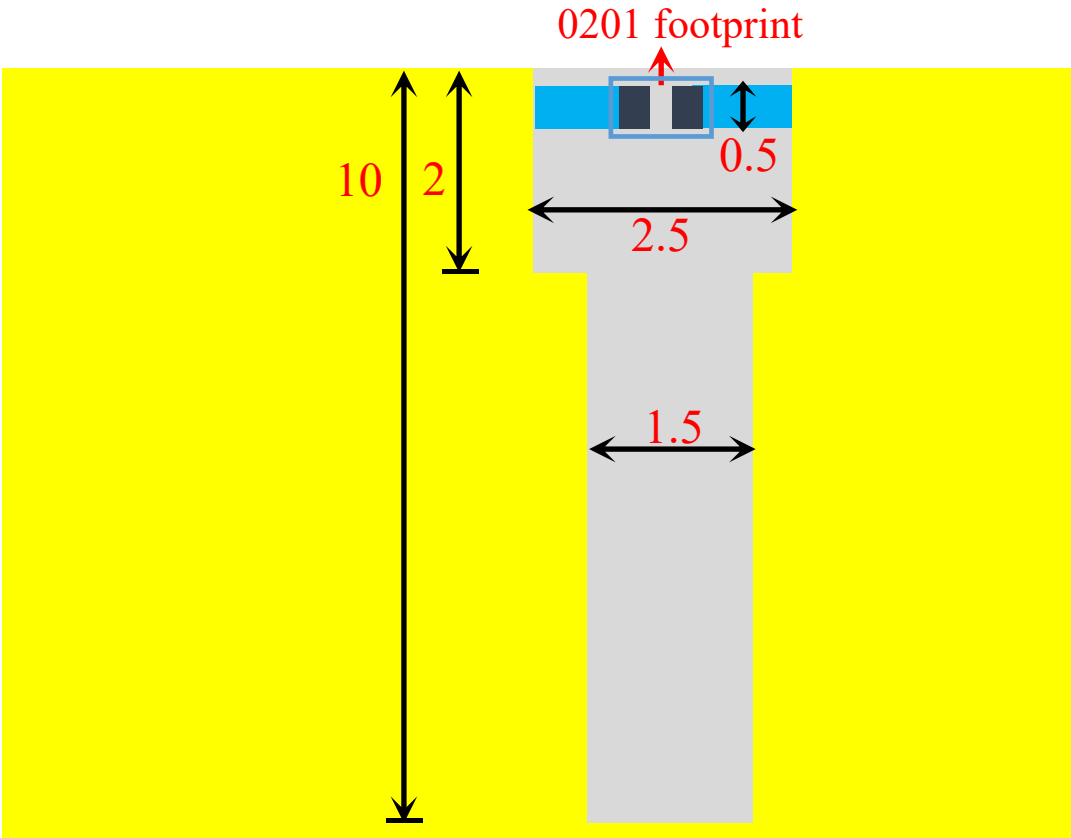

Hanyang Antenna Design Co. Ltd. has possession of proprietary information provided in this report and this proprietary information shall be kept in strict confidence and not disclosed to any person or firm without the prior written consent of Hanyang Antenna Design Co. Ltd.

▪ 深圳市宝安区前进二路宝运达物流信息大厦12A10/12A11
▪ 青岛市崂山区松岭路399号海信产业园A1号楼606
电话：0755-23069700 传真：0755-23069700

P/N: HY160808 SRF08

✓ Layout-3 (5mm×7mm)

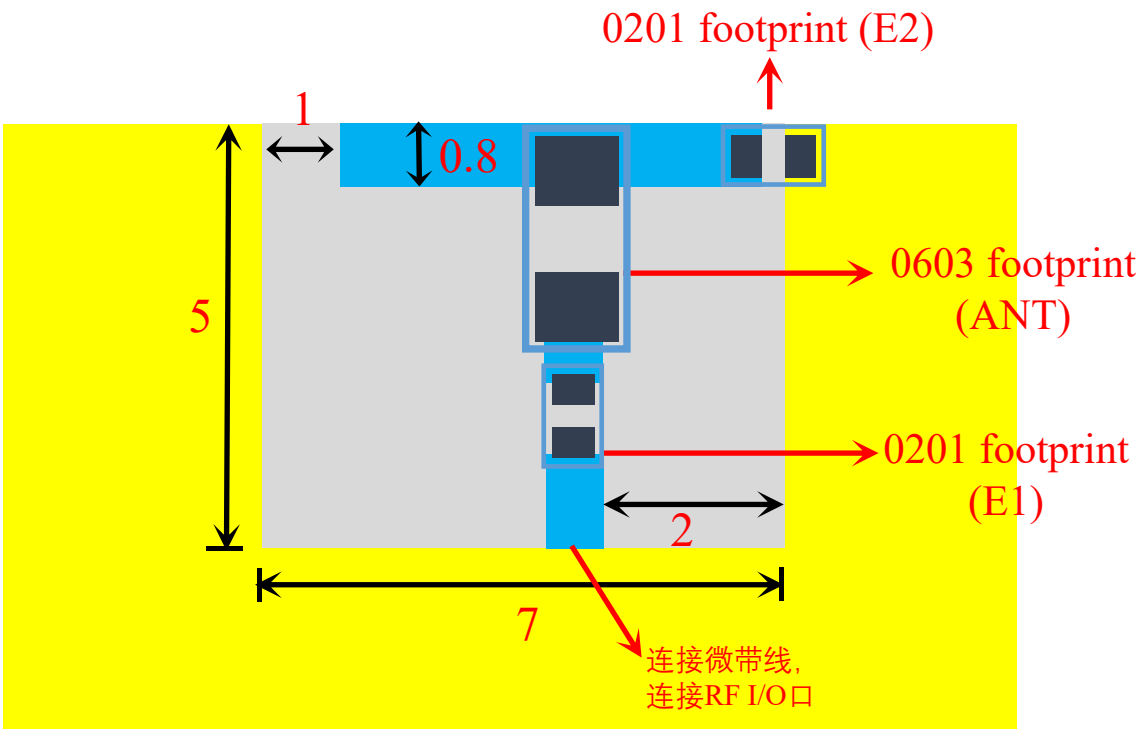

✓ Layout-4 (5mm×10mm)

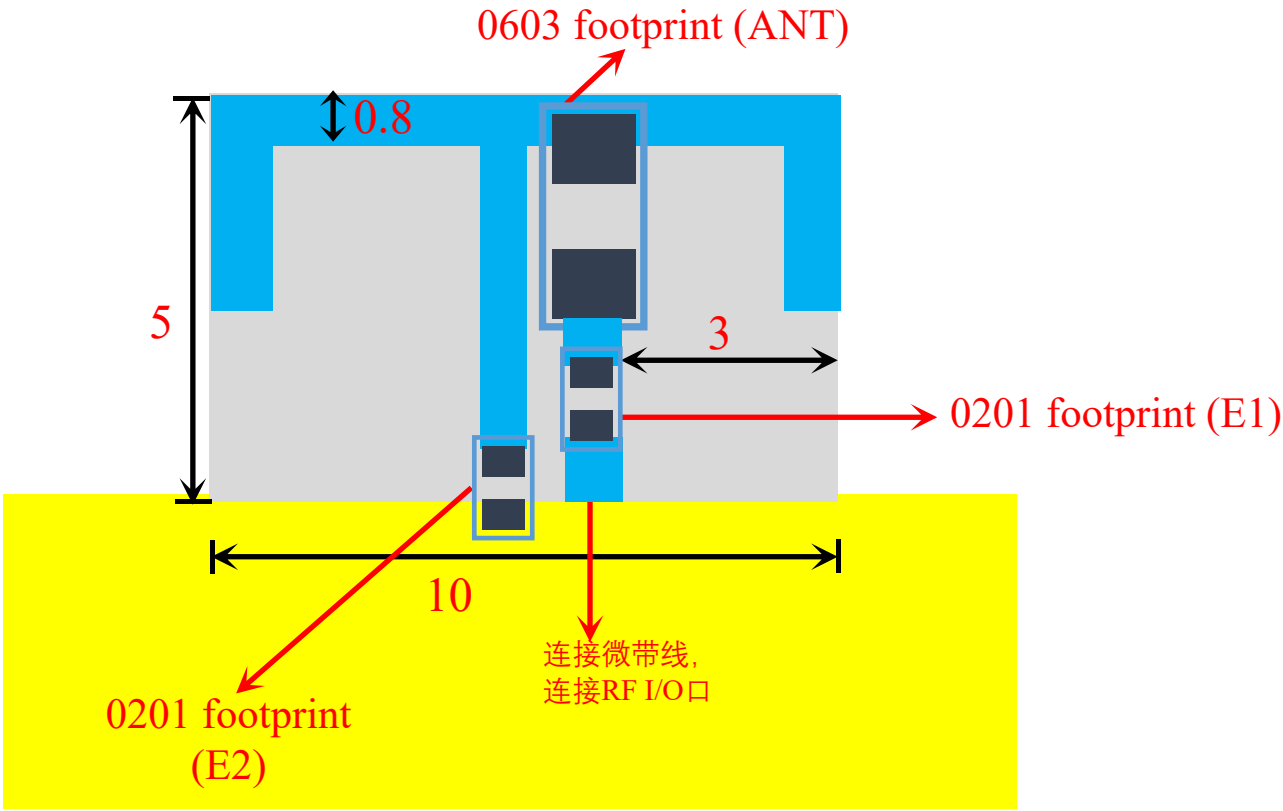

Hanyang Antenna Design Co. Ltd. has possession of proprietary information provided in this report and this proprietary information shall be kept in strict confidence and not disclosed to any person or firm without the prior written consent of Hanyang Antenna Design Co. Ltd.

▪ 深圳市宝安区前进二路宝运达物流信息大厦12A10/12A11
▪ 青岛市崂山区松岭路399号海信产业园A1号楼606
电话：0755-23069700 传真：0755-23069700

P/N: HY160808 SRF08

✓ Electrical Characteristics:

	Feature	Specification
1	Central frequency	2.45GHz&5.5GHz
2	Bandwidth	>150MHz
3	Peak gain	1.5dBi
4	VSWR	<2
5	Polarization	Linear
6	Azimuth beamwidth	Omnidirectional
7	Impedance	50 Ω

✓ Characteristic Curves:

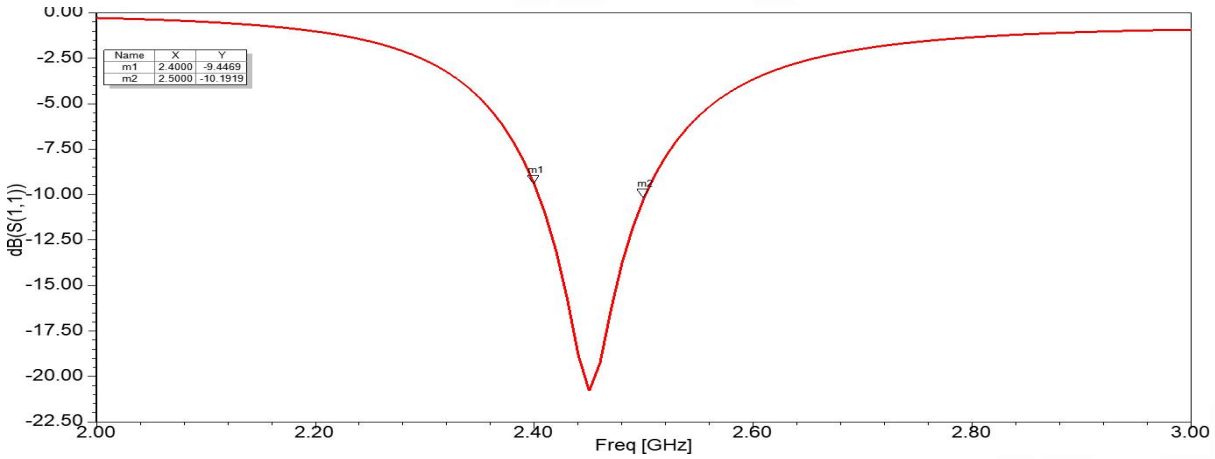

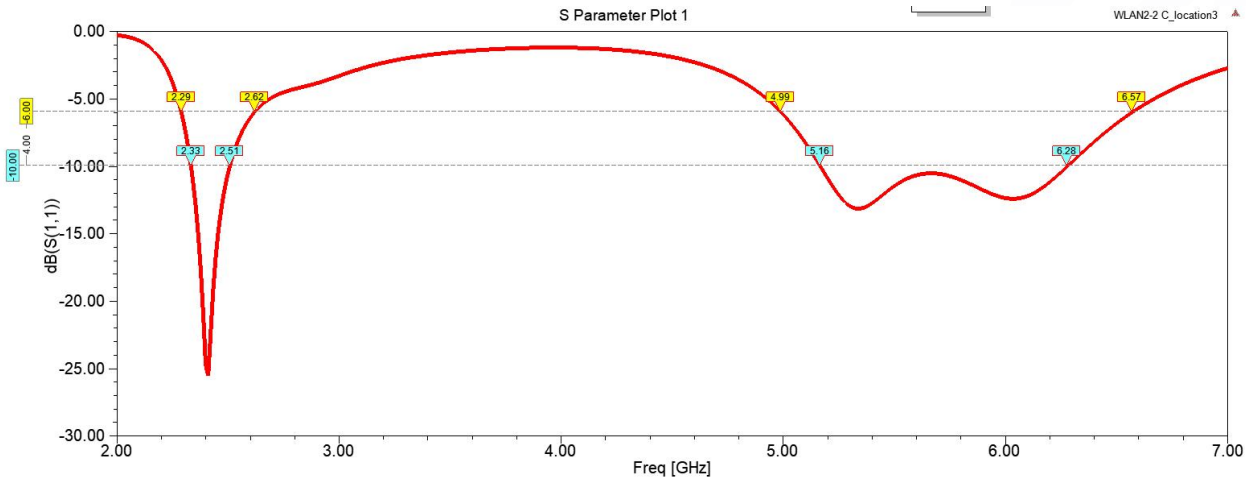

Hanyang Antenna Design Co. Ltd. has possession of proprietary information provided in this report and this proprietary information shall be kept in strict confidence and not disclosed to any person or firm without the prior written consent of Hanyang Antenna Design Co. Ltd.

▪ 深圳市宝安区前进二路宝运达物流信息大厦12A10/12A11
▪ 青岛市崂山区松岭路399号海信产业园A1号楼606
电话：0755-23069700 传真：0755-23069700

P/N: HY160808 SRF08

✓ Radiation Pattern:

coordinates：

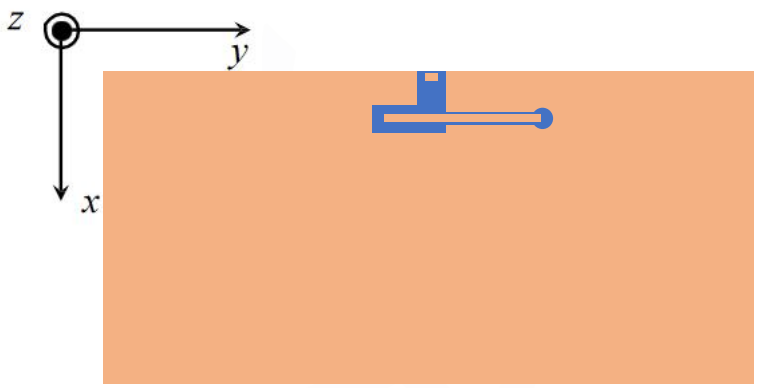

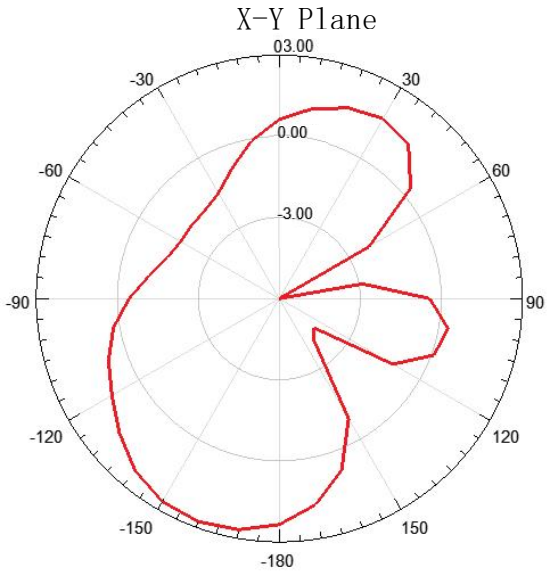

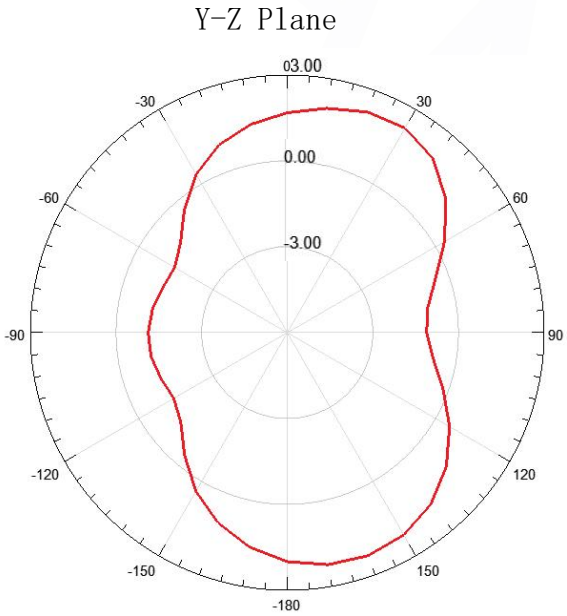

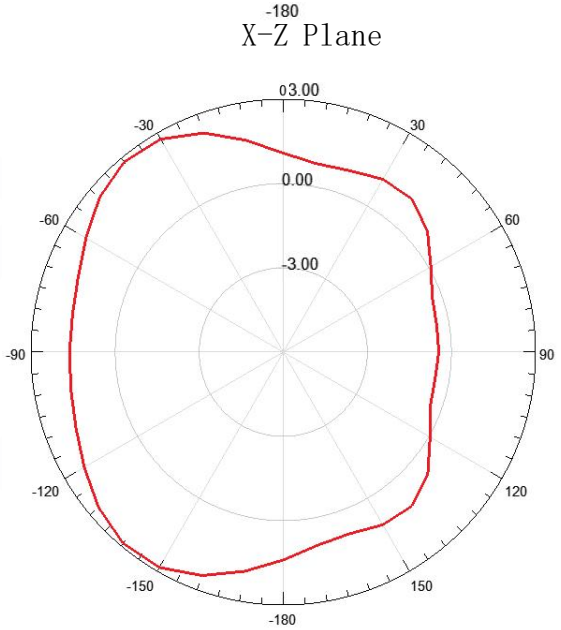

✓ Radiation Performance:

Frequency	2450MHz	5500MHz
Avg. gain	-1.03	-1.30
Peak gain	1.5	3.5
Efficiency	75%	78%

Hanyang Antenna Design Co. Ltd. has possession of proprietary information provided in this report and this proprietary information shall be kept in strict confidence and not disclosed to any person or firm without the prior written consent of Hanyang Antenna Design Co. Ltd.

▪ 深圳市宝安区前进二路宝运达物流信息大厦 12A10/12A11
▪ 青岛市崂山区松岭路399号海信产业园A1号楼606
电话：0755-23069700 传真：0755-23069700

✓ Dependability Test

Test Temperature	25℃±5℃
Operating Temperature	-25℃~+125℃
Temperature	5~40℃
Relative Humidity	20~70%

✓ Moisture Proof

Temperature：40±2℃ Humidity：90~95%RH
Duration：500h
Recovery conditions：Room temperature Recovery Time：24h (Class1) or 48h (Class2)

✓ Solderability

At least 95% of the terminal electrode is covered by new solder.
Preheating conditions:80 to 120°C; 10~30s.
Solder Temperature:235±5°C Duration:2 ±0.5s, Solder Temperature:245±5°C Duration:2±0.5s

✓ Optimum Solder Amount for Reflow Soldering

Too much solder

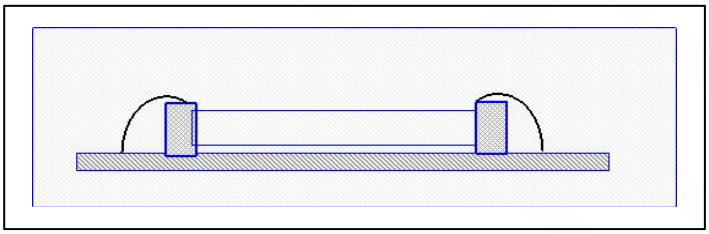

Cracks tend to occur due to large stress.

Not enough solder

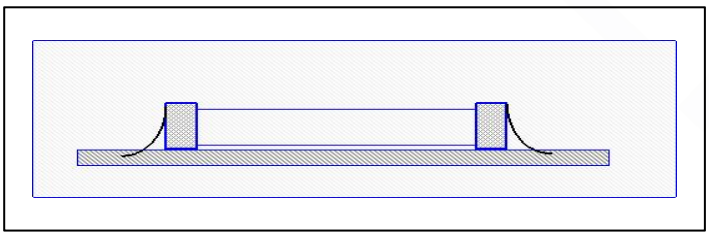

Weak holding force may cause bad connection between the chip and PCB.

✓ Recommended Soldering Amounts

The optimal solder fillet amounts for re-flow soldering

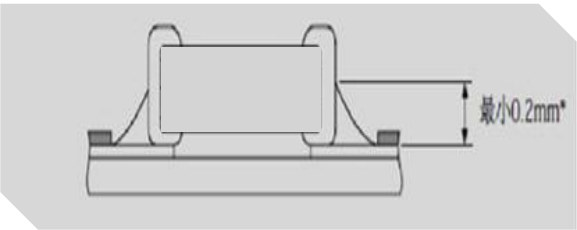

The optimal solder fillet amounts for wave soldering

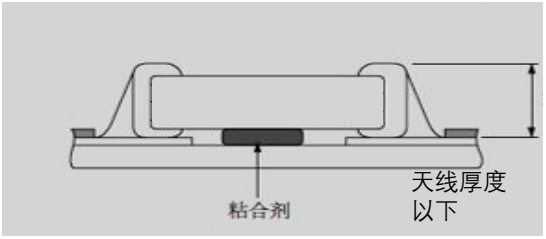

Hanyang Antenna Design Co. Ltd. has possession of proprietary information provided in this report and this proprietary information shall be kept in strict confidence and not disclosed to any person or firm without the prior written consent of Hanyang Antenna Design Co. Ltd.

▪ 深圳市宝安区前进二路宝运达物流信息大厦 12A10/12A11
▪ 青岛市崂山区松岭路399号海信产业园A1号楼606
电话：0755-23069700 传真：0755-23069700

✓ Temperature Cycle Test

10±1S Applied Force: 5N Duration: 10±1S
Preheating conditions: up-category temperature, 1h
Recovery time: 24±1h
Initial Measurement
Cycling Times: 5 times, 1 cycle, 4 steps:

阶段	温度（℃）	时间（分钟）
第 1 步	下限温度(NPO/X7R/X7S/X6S/X5R:-55 Y5V:-25 Z5U:-10)	30
第 2 步	常温 (+20)	2～3
第 3 步	上限温度(NPO/X7R/X7S: +125 Y5V/Z5U/X5R:+85 X6S:+105)	30
第 4 步	常温 (+20)	2～3

✓ Resistance to Soldering Heat

Preheating 80 to 120°C; 10~30s.Solder Temperature: 235±5°C; Duration:2±0.5s; Solder Temperature: 245±5°C Duration: 2±0.5s; Preheating100 to 200°C; 10±2min.

Solder Temperature: 265±5°C; Duration: 10±1s

Clean the capacitor with solvent and examine it with a 10X(min.) microscope.

Recovery Time: 24±2h

Recovery condition: Room temperature

✓ Resistance to Flexure of Substrate

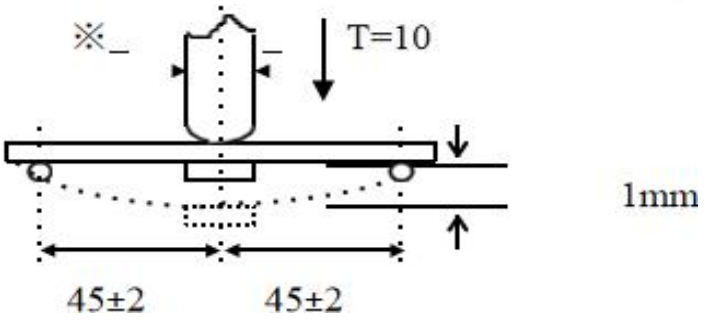

Test Board: Al_2O_3 or PCB Warp: 1mm Speed: 0.5mm/sec.
Unit: mm

The measurement should be made with the board in the bending position.

Hanyang Antenna Design Co. Ltd. has possession of proprietary information provided in this report and this proprietary information shall be kept in strict confidence and not disclosed to any person or firm without the prior written consent of Hanyang Antenna Design Co. Ltd.

▪ 深圳市宝安区前进二路宝运达物流信息大厦12A10/12A11
▪ 青岛市崂山区松岭路399号海信产业园A1号楼606
电话：0755-23069700 传真：0755-23069700

P/N: HY160808 SRF08

The temperature profile for soldering

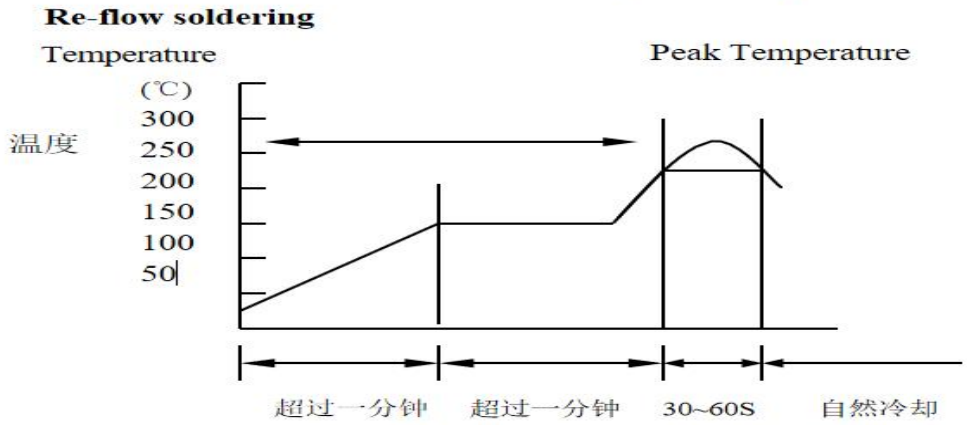

	Pb-Sn 焊接 Pb-Sn soldering	无铅焊接 Lead-free soldering
尖峰温度 Peak temperature	230℃～250℃	240℃～260℃

While in preheating,please keep the temperature difference between soldering temperature and surface temperature of chips as: T≤150℃.

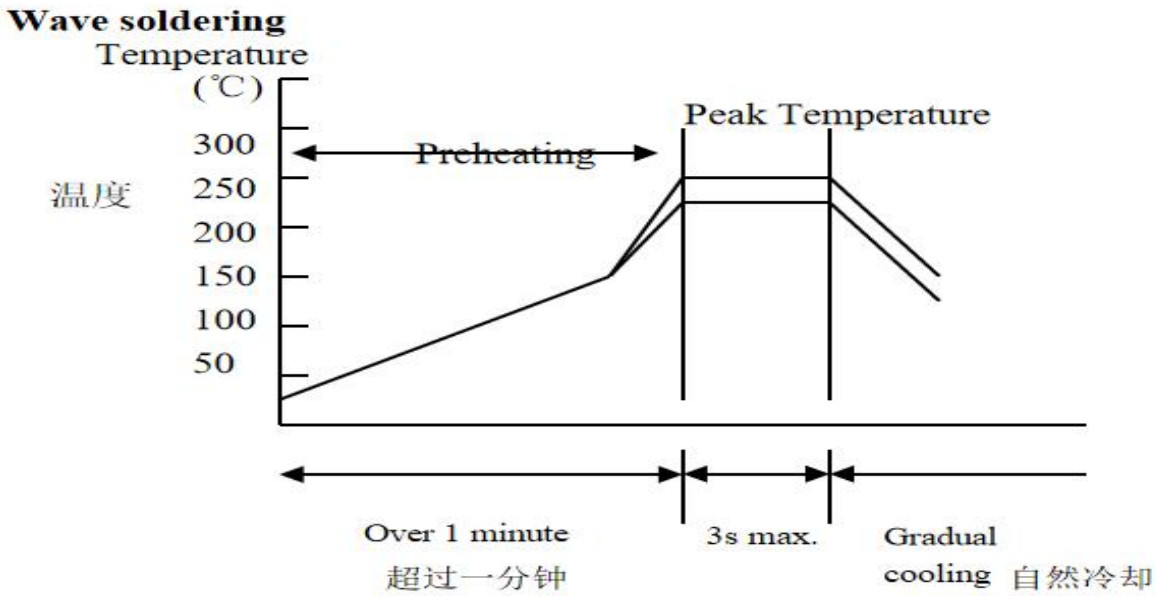

	Pb-Sn 焊接 Pb-Sn soldering	无铅焊接 Lead-free soldering
尖峰温度 Peak temperature	230℃～260℃	240℃～270℃

Hanyang Antenna Design Co. Ltd. has possession of proprietary information provided in this report and this proprietary information shall be kept in strict confidence and not disclosed to any person or firm without the prior written consent of Hanyang Antenna Design Co. Ltd.

▪ 深圳市宝安区前进二路宝运达物流信息大厦 12A10/12A11
▪ 青岛市崂山区松岭路399号海信产业园A1号楼606
电话：0755-23069700 传真：0755-23069700

✓ Dimensions of paper taping

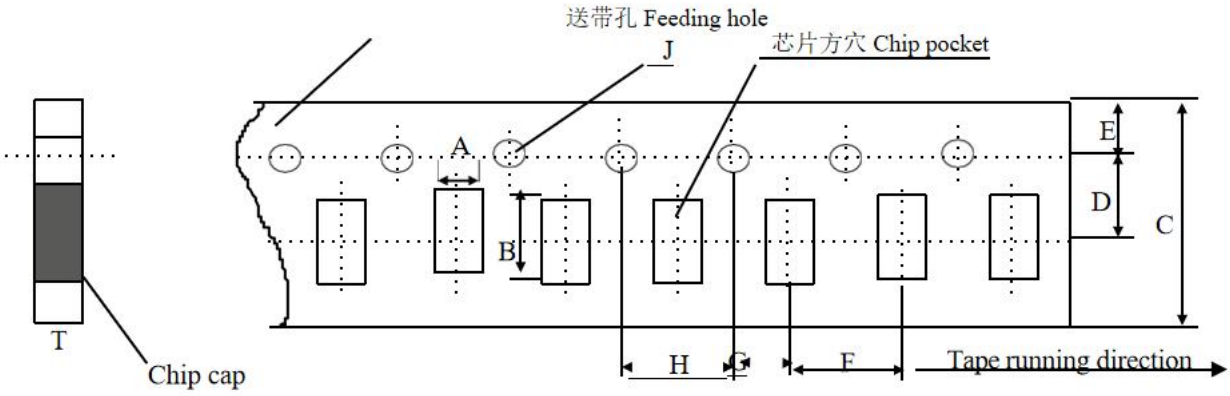

Unit：mm

代号Code / 纸带规格 papersize	A	B	C	D*	E	F	G*	H	J	T
尺寸	1.10 ±0.10	1.90 ±0.10	8.00 ±0.10	3.50 ±0.05	1.75 ±0.10	4.00 ±0.10	2.00 ±0.10	4.00 ±0.10	1.50 -0/+0.10	1.10 Max

Reel（4000 pcs/Reel）

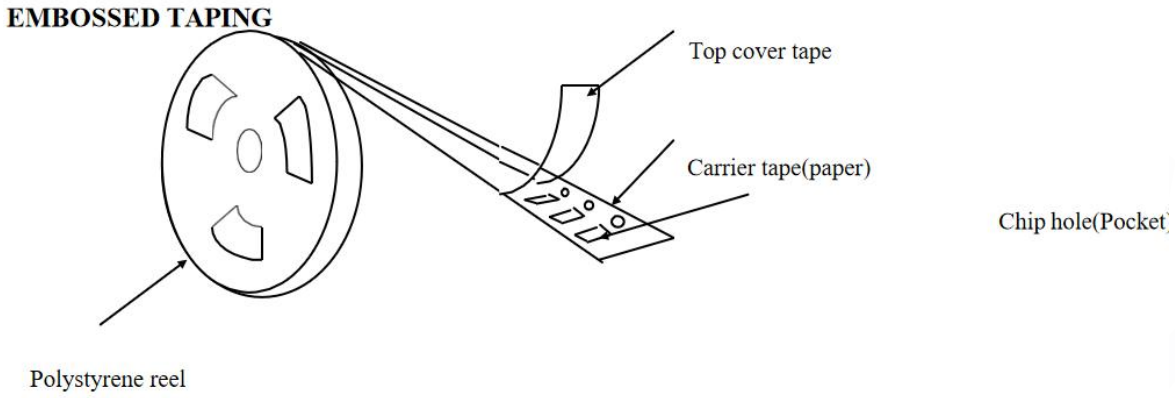

✓ Storage Period

The guaranteed period for solderability is 6 months (Under deliver package condition).
Temperature:5~40°C /Relative Humidity:20~70%

Hanyang Antenna Design Co. Ltd. has possession of proprietary information provided in this report and this proprietary information shall be kept in strict confidence and not disclosed to any person or firm without the prior written consent of Hanyang Antenna Design Co. Ltd.