Ver 0.4a

USER'S MANUAL

RADS11 / RADF13

RADIO REMOTE CONTROL SYSTEMS

KCI Hoists Corp. reserves the right to modify this information without prior notification.

INDEX

Pg.

1 CONFORMITY DECLARATION 3
2 DESCRIPTION 4
3 SAFETY PRECAUTIONS 5
3.1 What you must do 5
3.2 What you must not do 5
4 INSTALLATION 6
4.1 The BC60K battery charger 6
4.2 Receiver 7
4.3 Starting-up 11
4.4 Spurious 13
5 USE 14
6 HOW TO ACCESS TO THE CRANE CONDITION MONITORING UNIT IN RADF13 SYSTEM. SERVICE MODE 15
6.1 General Description of Service Mode 15
6.2 Entering the Service mode. 15
6.3 Keys for moving within the Menus. 16
6.4 Switching from Tared Load to Actual Load. 16
6.5 Resetting the Tared Load. 16
6.6 Exiting Service mode. 17
6.7 Messages originated in the receiver. 17
7 MAINTENANCE 18
7.1 Guarantee 18
7.2 Precautions 18
7.3 Preventive maintenance 19
7.4 Locating Break-downs 19
7.5 Spare parts 21
8 Drilling pattern sheet. 23

INDEX OF FIGURES

Figure 1 Battery charger BC60K 6
Figure 2 Receiver Box dimensions 7
Figure 3 Receiver to Power Electric Circuit connection 8
Figure 4 Receiver's RAD-RS outputs 9
Figure 5 Receiver's RAD-RF outputs 10
Figure 6 RAD-TF and RAD-TS pushbuttons 11
Figure 7 Entering the Service mode. 15
Figure 8 LCD Display in Service Mode 16
Figure 9 Pushbutton as a Key board for Crane Condition Monitoring Unit 16
Figure 10 LCD representing Tared Load 16

KCI Hoists Corp. reserves the right to modify this information without prior notification.

1 CONFORMITY DECLARATION

KCI Hoists corp.
Ruununmyllyntie 13
FIN-13210 Hämeenlinna. Finland
NIF A-20-036.018
Phone: +358 (0)20 427 11
FAX: +358 (0)20 427 3399

And in its name,
Mr. Ari Kiviniitty, Managing Director,

declares, conscious of complete responsibility, that the product

Remote Control KCI Hoists Corp.
RADS11 / RADF13

Composed by the transmitters
RAD-TS or RAD-TF

plus receivers
RAD-RS or RAD-RF,

is in conformity with the following standards

ETSI EN 300220:2000, ETS EN301489-3:2000
EN 55022:1994,
EN 61000-4-2:1995, EN 61000-4-3:1996, EN 61000-4-4:1995
EN 61000-4-5: 1995, EN 61000-4-6:1996, EN 61000-4-11:1994,
EN 61000-3-2:1995,
EN 50178:1998

EN 60204-32:1998, EN 60529:1991
PrEN 13557:1999, PrEN 12077-1:1996

and therefore with all essential requirements and provisions of the
Directive 1999/5/EC of the European
Parliament and of the Council of March 9, 1999
on Radio and Telecommunications Terminal Equipment
and with
the requirements of the 93/44/EEC Machinery Directive.

Häm

Signed: Ari Kiviniitty
Managing Director

2 DESCRIPTION

The RADS11 and RADF13 push-button transmitter type, radio remote control systems, are designed for the remote control of hoists and cranes, and are particularly suitable for applications when the operator needs to be able to choose the best location from which to carry out an operation.

The system consists of a transmitter for selecting commands and a receiver which is connected to the electrical system of the machine to be operated. The system also comes with a battery charger and two rechargeable batteries.

The main specifications for RADS11 / RADF13 systems are:

RADS11 / RADF13 Systems

Frequency band	869.7 to 870MHz (EU)	902 to 928MHz (USA)
Baud rate	7200 bps	
Channel separation	12.5 KHz (EU)	25 KHz (USA)
Channel Occupation	7.2 KHz	
Modulation	FM (GMSK)	
Response Time	100 ms	
Temperature range	-20º to +65ºC	-4F to 150F

The RAD-TS and RAD-TF transmitters

Transmission power	<5 mW	
Protection	IP65	NEMA 4

The RAD-RS and RAD-RF receivers

Power supply	48 Vac, 115 Vac ± 10%, 50/60 Hz	
Consumption	30 W	
Relays	230 Vac/8 A	
Protection	IP55	NEMA 12
Communication	CL20mA (RAD-RF only)	
Protection against electric shock	Class II according EN50178 (1997)	

The BC60K battery charger

Power supply	230 Vac ± 10%, 50Hz;	optional 115 Vac, 60 Hz

The BT06K batteries

Voltage	4.8 V	
Capacity	700 mAh, NiMH	
Charging temperature	5º to 35ºC	41 F to 95 F
Operating Time	6 h at 100% RAD-TS model. 4h at 100% RAD-TF model.	

3 SAFETY PRECAUTIONS

These instructions must be read carefully in order to install and use the set properly and to keep it in perfect working condition and to reduce the risks of misuse.
Do not use this set on machines for the lifting of persons or in potentially explosive atmospheres.
Any use other than that specified in this manual is dangerous. The following instructions must be strictly adhered to.
Important note: To comply with FCC RF exposure compliance requirements, this device and its antenna must not be co-located or operating in conjunction with any other antenna or transmitter.

WARNING:
Modifications to this equipment are expressly forbidden by the FCC Rules. Electrical or mechanical changes made to this device may cause harmful radio interference, and may void the user's authority to operate the equipment

3.1 What you must do

- Strictly adhere to the instructions for installation contained in this manual
- Make sure that the installation is carried out by professional and competent personnel.
- Ensure that all site and prevailing safety regulations are fully respected.
- Make sure that this manual is permanently available to the operator and maintenance personnel.
- Keep the transmitter out of reach of unauthorised personnel.
- Remove the transmission key when the set is not in use.
- On starting each working day, check to make sure that the STOP button and other safety measures are working.
- When in doubt, press the STOP button.
- Whenever several sets have been installed, make sure the transmitter you are going to use is the right one. Identify the machine controlled on the label for this purpose on the transmitter.
- Service the equipment periodically.
- When carrying out repairs, only use spare parts supplied by the manufacturers dealers.
- Use only battery pack BT06K 4.8V 600mAh.

3.2 What you must not do

- Never make any changes to the set, which have not been studied and approved by the manufacturer.
- Never power the equipment other than with the specified power supply.

- Never allow unqualified personnel to operate the equipment.
- After use, never leave the equipment ON. Always use the contact key or the STOP button to avoid accidentally activating manoeuvres.
- Do not use the set when visibility is limited.
- Avoid knocking or dropping the set.
- Do not use the set if failure is detected.

4 INSTALLATION

4.1 The BC60K battery charger

Connect the charger to the mains using the power source and the cable supplied. The red LED, in the middle, should light up indicating power ON.

When installing the battery charger, bear in mind that the batteries must be charged at temperatures over 5ºC (41F) and that the power supply must be left on all night. Also remember that the charger must not be left in direct sunlight, as the batteries may not become fully charged at temperatures exceeding 35ºC (95F).

Place the batteries in the charger. There is green LED on top of each battery. Each LED should light up, indicating that recharging is in process. Complete recharging takes approximately 12 hours. After charging process is finished, the green LED is turned OFF. The batteries may remain in the charger for an unlimited period of time.

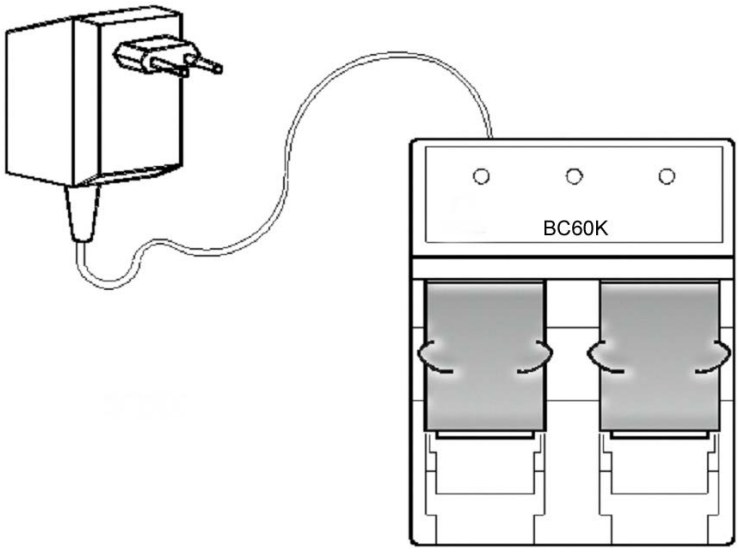

Figure 1 Battery charger BC60K

The capacity of the batteries decreases with use. Their life span is estimated to be 500 recharging cycles, but this depends largely on the conditions of use, for which the following is recommended:

- Do not recharge the battery until it is completely empty. The transmitter indicates this.
- Always charge the batteries at temperatures between 5º(41F) and 35ºC (95F).
- Avoid short-circuits between the battery contacts. Do not carry charged batteries in toolboxes or next to other metal objects (keys, coins, etc.).
- Always keep contacts clean.
- Never leave batteries in direct sunlight.

4.2 Receiver

Make sure that the crane is stopped for the entire duration of the assembly process, keep the work area free and wear protective clothing.
Park the crane and position stop-ends (if these are not available use appropriate signs) at a suitable distance so that it is not hit by other cranes on the same runway.
Check the power-supply voltage and turn off the mains switch.

Find a suitable location for the receiver, away from any intense radioelectric disturbance sources and install the receiver cabinet using 4 elastic absorbers (M8).

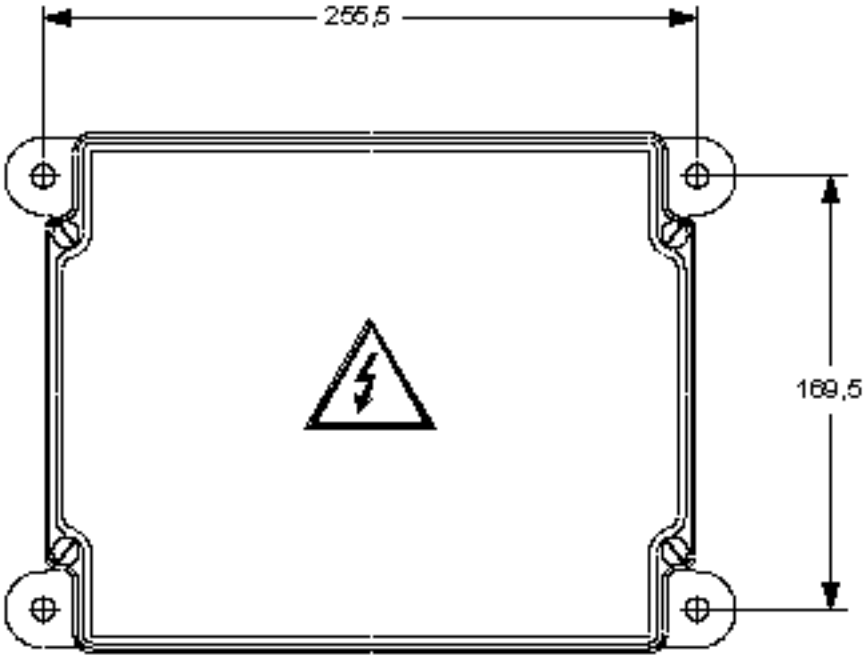

Figure 2 Receiver Box dimensions

The receiver must be placed free of shielding. Metal parts which could obstruct reception of the radio signal must be avoid.

The way to connect the receiver box to the crane's electrical installations is using a cable with a terminal multipin connector:

Note: See attached drilling pattern sheet.

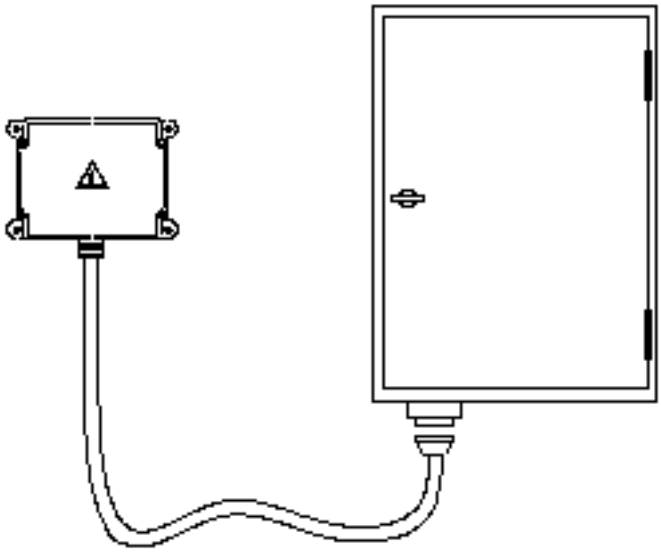

Figure 3 Receiver to Power Electric Circuit connection

Connect the power supply and the receiver outputs on the corresponding relay board plug-in terminals. Do this following the outputs diagram which is supplied with the set. This diagram indicates the correspondence between the transmitter commands and the receiver outputs.

The KSTOP1 and KSTOP2 relays are in series and must be connected to the main contactor coil circuit.

The K2/START is activated once the start-up command is held down.

The K1/SEC relay is a security relay which is activated when any of the order relay must be activated.

The receiver is a class II device, according EN50178, containing a functional earth connection. A green-yellow cable is not recommended for this earth connection.

Power supply connection 1 and relays must be protected against current overload with convenient electric devices, limiting the maximum input/ output current to their limits: 1A for power supply and 8A for relays.

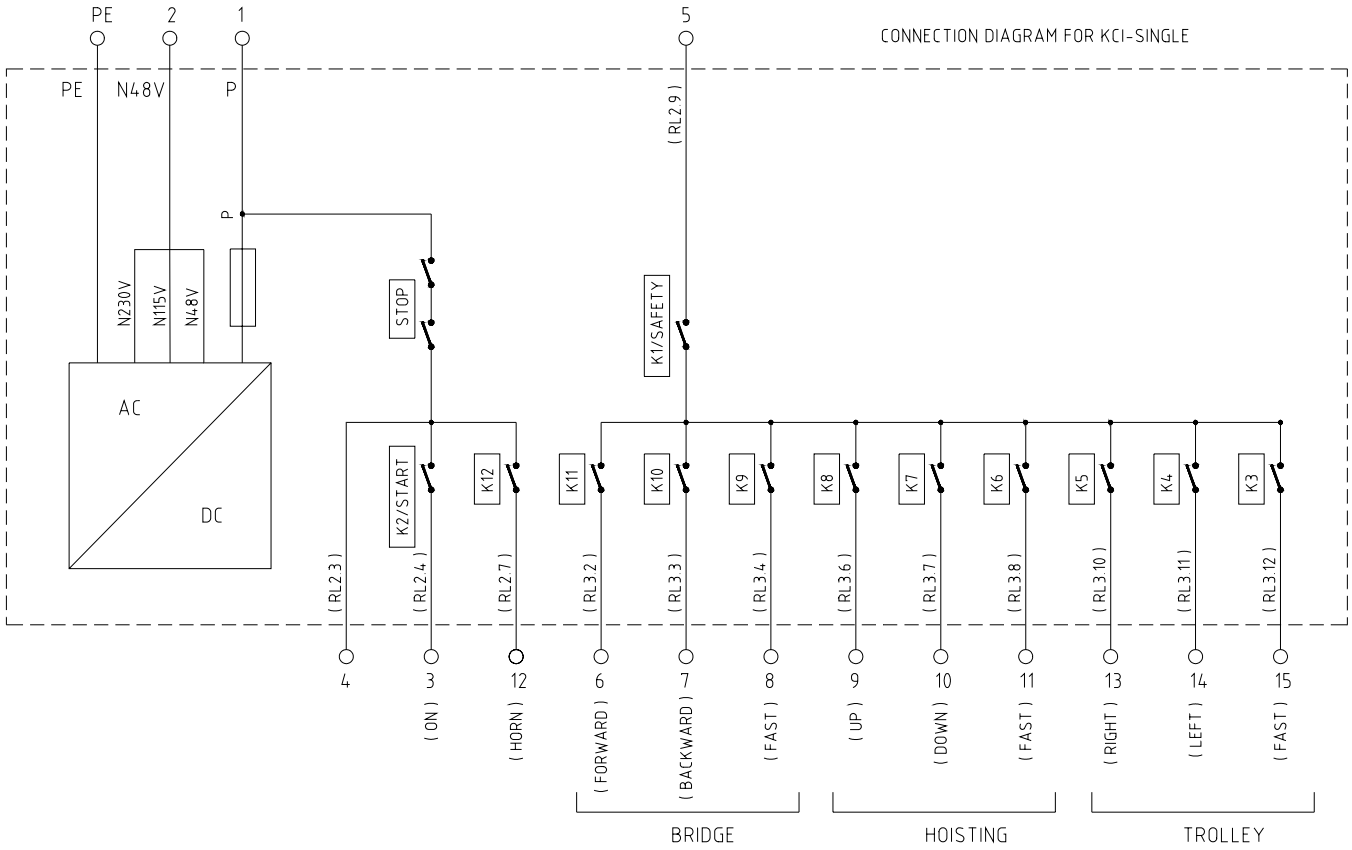

Figure 4 **Receiver's RAD-RS outputs**

Remember to connect the ground cable.
Only use fireproof cables for connections.
Select the appropriate voltage on the receiver, (115 or 48 Vac).

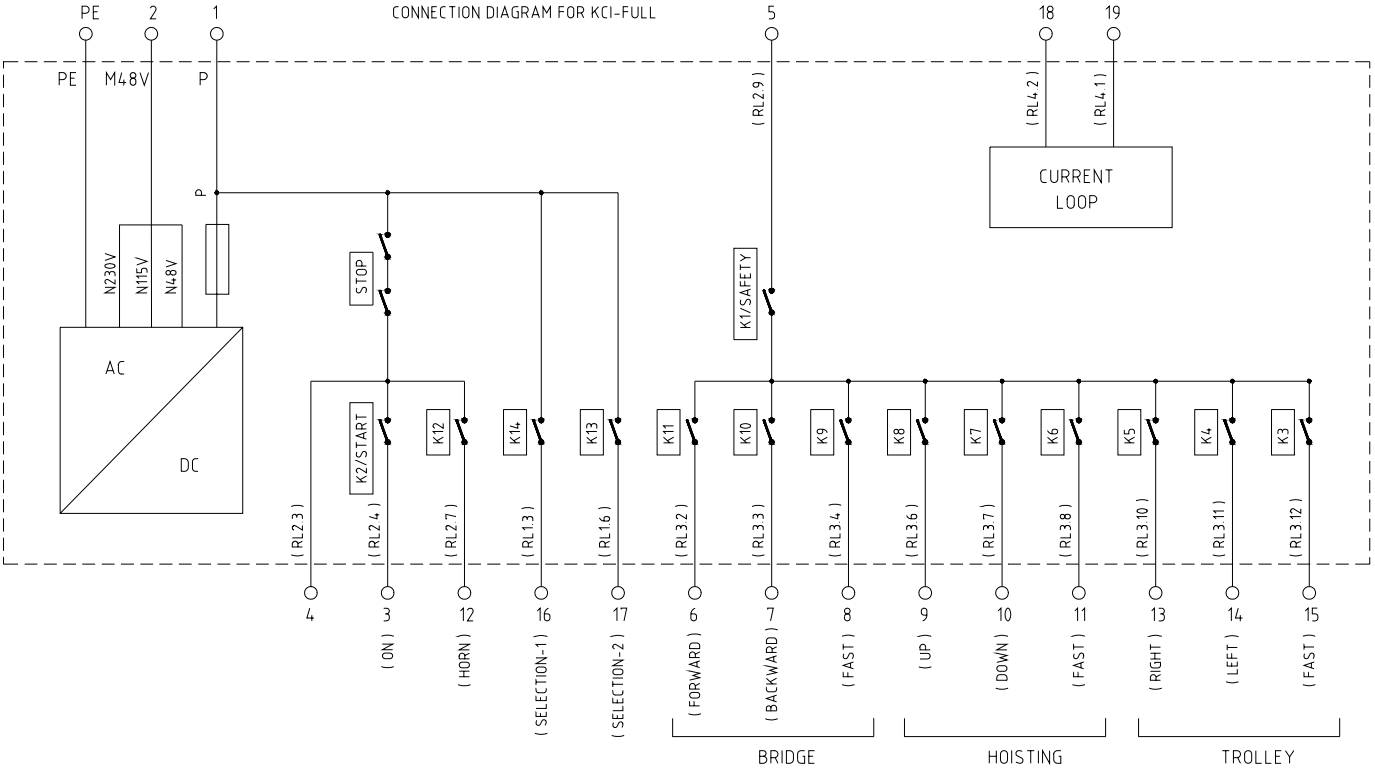

Figure 5 Receiver's RAD-RF outputs

Remember to connect the ground cable.
Only use fireproof cables for connections.
Select the appropriate voltage on the receiver, (115 or 48 Vac).

4.3 Starting-up

Proceed with caution; the equipment may not be connected correctly which may lead to unforeseeable movements on starting-up.

Once the receiver has been connected, disconnect the power supply to the motors, (for example, by removing the fuses) and power on the receiver. The receiver will enter into the SCANNING mode while the own transmitter is off. The following receiver LEDs should now light up:

SIGNAL:	OFF if all radio channels in the band are free. Flashing ON if the receiver is finding channels with RF signals. (Now temporary ON fix).
POWER:	ON, indicating that the power supply is correct.
HARDOK:	ON, indicating the absence of defects on the board.
ID:	OFF.
DATA:	OFF if none of the radio channels contains signals belonging to a RADF13 or RADS11 radio remote control system in the area. Flashing ON if some do.

To enter into Standard Working mode follow the sequence:

1. Put a charged battery in the transmitter.
2. Turn on the key-switch.
3. Push down STOP pushbutton
4. Pull up STOP pushbutton. The transmitter LED should flash yellow-green during a second.
5. Press Down Pushbutton to the second step.
6. Press START The transmitter LED should light up green indicating that the transmitter is transmitting.

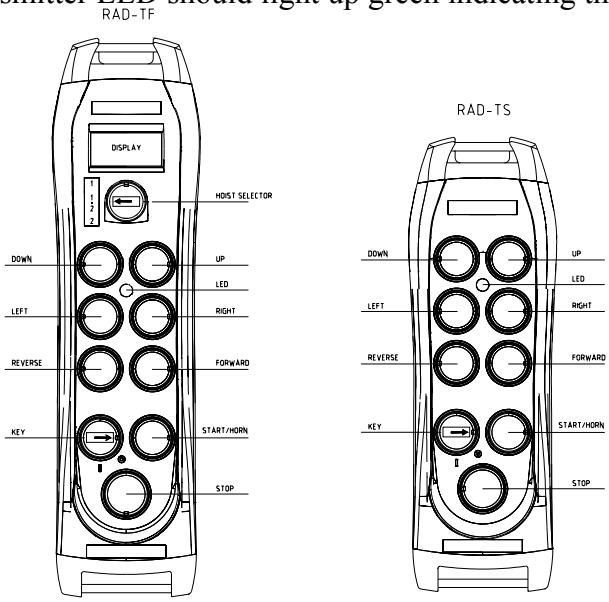

Figure 6 RAD-TF and RAD-TS pushbuttons

On receiving a signal from the transmitter, the receiver will enter into de WORKING mode. The following LEDs will light up on the receiver:

SIGNAL:	Flashing ON, indicating that it is receiving an RF signal at the working frequency. (Now temporary ON fix).
POWER:	ON, indicating that the power supply is correct.
HARDOK:	ON, indicating the absence of defects on the board.
ID:	Flashing ON each time a good frame is received with ID correct. This means that the receiver has recognised the transmitter's identification code
DATA:	Flashing ON each time a good frame is received without caring about ID. This means that the data received have a correct format.

After pushing the start button, the KSTOP 1 and KSTOP 2 relays will be activated. K2/START and K12/HORN relays are activated only meanwhile the start button is pushed.

Relays K13 and K14 on RADF13 system will be activated to the corresponding state of the Hoist Selector.

Push any of the transmitter's manoeuvre buttons and its corresponding relay should be activated. The safety relay K1/SEC will also be activated.

Check to make sure all other manoeuvres work in this way.

Turn OFF the transmitter using the STOP button, and make sure that on doing so the relays are deactivated and the DATA, ID and SIGNAL LEDs light as corresponding to the SCANNING mode.

Reconnect the power supply to the motors, move to the usual work position and check to see if all the manoeuvres and the STOP button are functioning correctly.

Remember that the receiver has several voltage-powered circuits. Even when the receiver's power supply has been cut off, there is still a risk of electrical shocks.

KCI Hoists Corp. reserves the right to modify this information without prior notification.

4.4 Spurious

The receiver is designed to become blocked if there is intense spurious disturbance arising from galvanic, inductive, or capacitive coupling, thus preventing unwanted manoeuvres.

As a precautionary measure, it is recommended that spurious-preventing devices (diodes, capacitors, RC circuits) be fitted at the source of the disturbance. These devices should be connected directly to the contactor coil terminals, etc. and can be obtained from the usual contactor suppliers.

If the equipment is installed on a vehicle with a friction power supply, where electric arcs are produced as a result of defective contact, an RC circuit should be fitted between each phase and earth.

KCI Hoists Corp. reserves the right to modify this information without prior notification.

5 USE

To ensure correct use of the equipment, follow the instructions below:

- Make sure the transmitter you are going to use is the right one, identifying the machine on the identification label.

- Attach the strap to the transmitter unit. Its use is recommended to prevent the equipment from falling.

- Introduce a charged battery, turn the contact key and activate the transmitter.

- To activate the system, you must first pull out the STOP button, the transmitter LED should then give a yellow-green pulse; then press the START button. If you find that the STOP button has already been pulled out, it is necessary to push it in and then pull it out again, as this sequence will allow the checking of the STOP circuit. If the unit has experienced a time-out auto-disconnection, it is not necessary to repeat the STOP button procedure, simply push the START button for 1 second.

- The transmitter LED should light up in green, indicating that the transmitter has started transmitting. From now on, if any of the transmitter's command buttons are pressed, the corresponding manoeuvre will be activated.

- To be able to start up the transmitter, all the command pushbuttons must be in the neutral position (not activated). This is not the case for the Hoist Selection functions.

- When 4 minutes have passed and no active manoeuvre command has been activated, the transmitter automatically switches off. To start it up once more, press the start button.

- The transmitter is equipped with a circuit for monitoring the battery level. When this level drops below a pre-established limit, the transmitter LED starts to flash in red; 5 minutes later the transmitter switches off, and the machine's main contactor is deactivated. During this time, the load has to be located on a safe position.

- In case of RAD-TF transmitter, the LCD display also shows the battery level of charge: Three dots for charge bigger than 50%, two dots when 50% or less, one dot when 10% or less, none when 5% or less.

- To switch OFF the transmitter, press the STOP button or turn OFF the contact key.

Remember that you are going to remote control a moving piece of machinery. The safety instructions described in chapter 3 of this manual must be strictly adhered to.

KCI Hoists Corp. reserves the right to modify this information without prior notification.

6 HOW TO ACCESS TO THE CRANE CONDITION MONITORING UNIT IN RADF13 SYSTEM. SERVICE MODE.

6.1 General Description of Service Mode

For RADF13 systems, there are a special "Service Mode" of operation for maintenance and set up the Crane Monitoring Unit PREMIUM via radio.

This unit is connected to the receiver RAD-RF by a serial data communication CL20mA.

When in Service mode, the transmitter RAD-TF is able to acts as a data console for the PREMIUM control unit, sending commands and receiving information, using the radio link and the appropriate software in transmitter RAD-TF and in receiver RAD-RF.

During the Service Mode of operation, due to the amount of data being sent in the reverse link, the amount of frames per second in reverse mode is increased such that the feedback in the display is fast enough. The movements of the crane in this mode of operation are forbidden, this is, there are no movement orders being sent by the transmitter or acknowledged by the receiver. The Stop relays are activated however.

PLEASE NOTE: It could be too slow to enter in service mode by the receiver if the transmitter and the receiver are in different channels. Whenever possible, avoid the scanning of radio channels.

6.2 Entering the Service mode.

To access the Crane Condition Monitoring Unit mode follow the sequence:

1. Put a charged battery in the transmitter.
2. Move close to the receiver.
3. Turn on the key-switch.
4. Push down STOP pushbutton.
5. Pull up STOP pushbutton.
6. Press Pushbutton UP in second speed, and then, START . The system enters in Service Mode. See figure 7.

Figure 7 Entering the Service mode.

KCI Hoists Corp. reserves the right to modify this information without prior notification.

While the system is in service mode the “envelope” icon in the display will be switched ON. (Figure 8).

Figure 8 LCD Display in Service Mode

6.3 Keys for moving within the Menus.

The keys for moving within the menu are the following (Figure 9):

- UP: Button that simulate the Up Key. Up button. ▲
- DOWN: Button that simulate the Down Key. Down button. ▼
- ESC: Button that simulate the Esc Key. Left button. ◄
- ENTER: Button that simulate the Enter Key. Right button. ►

Figure 9 Pushbutton as a Key board for Crane Condition Monitoring Unit

6.4 Switching from Tared Load to Actual Load.

The actual load is shown in the display unit as the Tared Load, but an “A” is shown below the “t” in the bottom right hand side of the display unit. In order to switch from Tared Load to actual load, this is performed by pressing up and/or down. Pressing ENTER, the password is requested.

Figure 10 LCD representing Tared Load

6.5 Resetting the Tared Load.

The reset of the Tared Load is performed by pressing the ESC button for several seconds.

6.6 Exiting Service mode.

There are two ways of exiting this mode.

- Pressing the STOP button. (the transmitter will be switched OFF and the receiver will switch to standby mode). If the system is switched ON again and the system was switched OFF in a menu within the service mode, when receiving the new frames in normal operation, first of all the following message may appear: "EXITING SERVICE MODE". The receiver will send as many Escape messages as needed to return to the load message.
- Pressing the START button for 3 seconds. The transmitter will switch from Service Mode to Standard mode of operation while the receiver will go to Standars mode passing through the Standby status. The STOP relays are deactivated and activated again. If you exit service mode within a menu in the PREMIUM, the system makes the PREMIUM exit to the Load status. This may take several seconds where the message "EXITING SERVICE MODE" will be ON.

6.7 Messages originated in the receiver.

There are three possible messages that may appear apart from the messages originated by the Crane Condition Monitoring Unit, PREMIUM. These are:

- "EXITING SERVICE MODE": This message is originated when the PREMIUM system is in Service mode within the menus and the transmitter is in Normal mode of operation. This message will appear prior to show the Load or Fault messages while exiting the Service mode. The receiver will send the Hoist control unit PREMIUM as many Escape messages as needed to return to Normal mode.
- "RECEIVER FAULT": This message will appear whenever the receiver RADF13 is not able to open the current loop communications channel. There will be a problem in the receiver.
- "CURRENT LOOP FAULT": This message will appear whenever the receiver RADF13 is not able to read any data frame from the Hoist control unit PREMIUM. This message can be seen when switching the unit to display mode or by unplugging the Hoist control unit PREMIUM from the receiver. There is an error in the connection between both systems.
- If the transmitter does not receive a valid frame from the receiver within 2.5 seconds, the display will erase the data being displayed. This means that there is faulty link between transmitter and receiver.

KCI Hoists Corp. reserves the right to modify this information without prior notification.

7 MAINTENANCE

7.1 Guarantee

The systems RADS11 / RADF13 remote control sets are guaranteed for a period of up to one year after the date of delivery. This guarantee covers repairs and the replacement of defective pieces at our Technical Service Department. Both the transmitter and receiver will be necessary if any repairs or replacements need to be carried out.

The guarantee does not cover damage resulting from the following:

- transport,
- incorrect installation,
- repairs or alterations made to the equipment by personnel other than authorized,
- obvious misuse or incorrect maintenance of the equipment.

Our Technical Service reserves the right to evaluate break-downs and damage.

Under no circumstances the manufacturer will be held responsible for hold-ups at work, accidents or expenses incurred as a result of equipment malfunctioning.

7.2 Precautions

This equipment is designed for use in an industrial environment. However, we recommend you follow the instructions below to extend the life span of your remote control set:

- Use the strap provided with the transmitter to prevent the transmitter from falling.
- Do not clean the transmitter with solvents or pressurised water. Use a damp cloth or soft brush.
- Use and recharge the battery regularly.
- Check every day that the STOP button is working.
- Disconnect the receiver cables if soldering/welding work is going to be carried out on the crane.

7.3 Preventive maintenance

A few simple checks can bring to light certain defects which can later be the cause of subsequent break-downs and which can be readily rectified. We recommend the following checks to be made from time to time:

Transmitter:

- Check the transmitter's closing screws to make sure they are securely tightened.
- Check the rubber protection seals on the transmitter's command buttons from time to time. Replace them if they are found to have deteriorated. This will protect the unit's watertightness.
- Keep the battery contacts clean.

Receiver:

- Check to make sure the cable fixture screws are tight.
- Check the contacts on the fuses and the fuse-holders.

Battery charger and batteries:

- Keep all contacts clean.

7.4 Locating Break-downs

The transmitter and receiver both have status monitoring LEDs which help to identify irregularities. The most common signals are contained in the tables below:

7.4.1 TRANSMITTER

LED	MEANS
Green double flashing	Transmitter ready for start-up
Solid green	Transmitter transmitting normally
Red flashing	Battery level low
Red double flashing	Transmitter cannot start up because a manoeuvre command is present
Solid red	Transmitter failure

KCI Hoists Corp. reserves the right to modify this information without prior notification.

7.4.2 RECEIVER

In WORKING mode, the 5 green LEDs should light as described in Starting-up procedure. If this is so, press the transmitter manoeuvre buttons and observe the response of the output relays. If the response is normal, the problem is not related to the remote control equipment and the installation must be checked. If any of the relays is not activated, the problem is associated with the remote control equipment.

LED	COLOUR	ON	FLASHING ON	OFF
SIGNAL	Green	-	Own or more Radio Systems sharing the own channel	Receiver doesn't receive any RF signal.
POWER	Green	Power supply OK	-	Power supply NOTOK
HARD OK	Green	Board OK	Slow: Failure in board. Fast: EEPROM error	Failure in board
ID	Green	-	ID Code OK	Not recognised ID Code
DATA	Green	-	Own or other valid messages are presents	No correct messages are being received.

If the problem is associated with the equipment, please send both the transmitter and the receiver to the your Technical Assistance Service, together with a description of the problem and the status of the LEDs.

KCI Hoists Corp. reserves the right to modify this information without prior notification.

7.5 Spare parts

7.5.1 Transmitters

Europe	TS – EU; Code	TF – EU; Code
US/Canada	TS – US; Code	TS – US; Code

7.5.2 Battery and charger

Battery charger BC60K
Code

Battery BT60K
Code

Power supply 230 Vac
Code :

115 Vac
Code :

230 Vac UK
Code :

7.5.3 Command elements

Pushbuttons P60K
Code:

Rubber cover CP60K
Code :

Stop button
Code :

Key lock K60
Code:

Selector switch S60
Code:

8 Drilling pattern sheet.
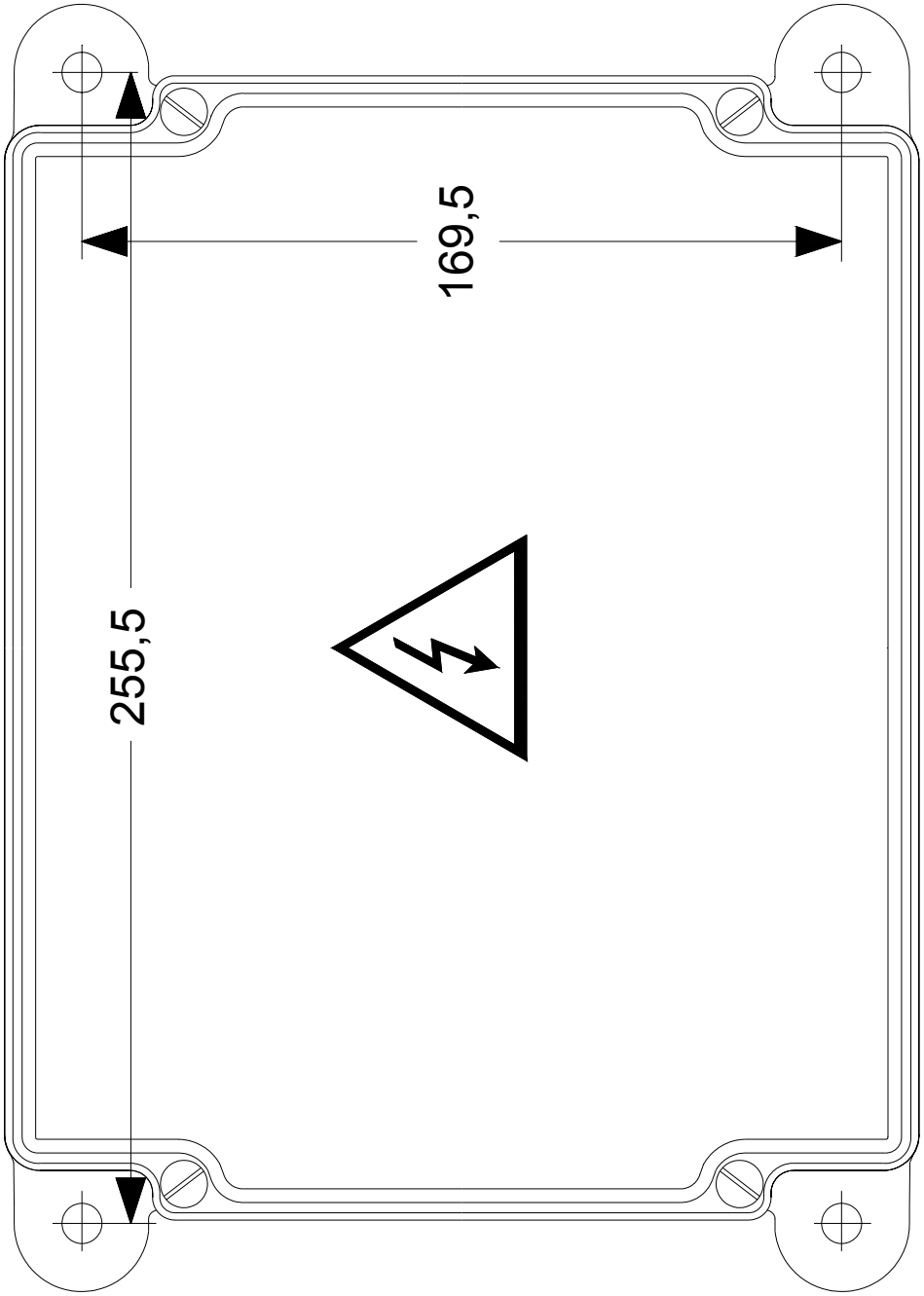
NO SCALE