WILSONPRO™
A Wilson Electronics Brand

ENTERPRISE 1398

In-Building Cell Signal Amplifier with
Multi-Tower Targeting (MTT) Technology

Installation Guide

NEED HELP?

wilsonpro.com

866.294.1660

Index

Package Contents

About The Enterprise 1398

Key Features

Installation Diagram

Menu System

Safety Guidelines

Specifications

Warranty

Package Contents

Enterprise 1398 SKU 460072

Enterprise 1398 Amplifier & Power Supply

Wide Band Directional Antenna (310002-952300)

Dome Antenna (W6010026-952300)

30 m. (100 ft.) Wilson400 Cable (qty. 4) (952300)

60 cm. (2 ft.) Wilson400 Cable (952302)

50 Ohm Lightning Surge Protector (859902)

Enterprise 1398 SKU 461072

Enterprise 1398 Amplifier & Power Supply

Wide Band Directional Antenna (310002-952300)

Dome Antenna (W6010026-952300)

30 m. (100 ft.) Wilson400 Cable (qty. 4) (952300)

60 cm. (2 ft.) Wilson400 Cable (952302)

50 Ohm Lightning Surge Protector (859902)

Enterprise 1398

In-Building Cell Signal Amplifier System

Optimizes mid-band 5G (3.45 - 3.98 GHz) in any building.

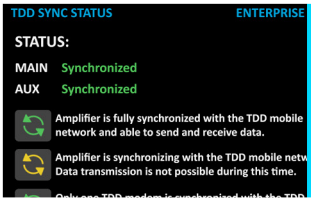

After configuration, the Time Division Duplex (TDD) automatically syncs to the carrier network.

Offers flexibility for a 2x2 MIMO setup.

Install as a standalone unit or add-on to existing WilsonPro systems.

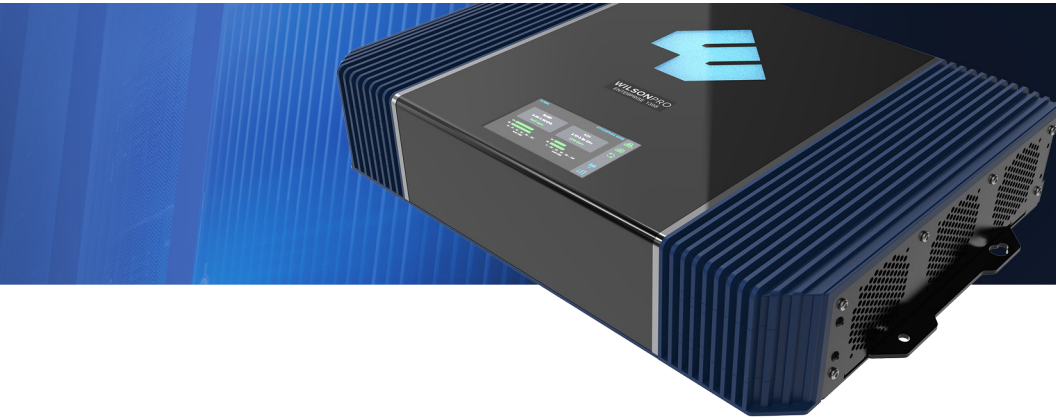

The Enterprise 1398 is the newest C-band 5G amplifier solution from WilsonPro. The Enterprise-grade amplifier is compatible with mid-band frequency 5G operating at 3.45 - 3.98 GHz. Sold as a amplifier only, it's an excellent up sell opportunity to upgrade existing WilsonPro 1300 and 4300 systems to support additional 5G coverage. After configuring the Enterprise 1398's TDD modem, it will automatically synchronize, instantly amplifing the C-band signal and requires no additional backhaul to extend 5G right away. With included SDF, you target a specific network to amplify. The Enterprise 1398 offers additional flexibility with dual paths available for either a 2x2 MIMO or split mode setup. The amplifier requires indoor and outdoor C-band antennas and 50-ohm coaxial cable with N-type connectors. Available with 50-ohm N-type connectors. Fits a standard (2U) rack. Carrier approval is required to turn on this amplifier.

Key Features

WilsonPro Cloud: Remote system monitoring. Connects to WilsonPro Cloud service via internal, pre-activated LTE modem or Ethernet.

Extended Dynamic Range (XDR) for continuous connectivity: XDR lets the Enterprise 1398 system work with an incoming signal and never shuts down due to a strong outside signal.

TDD Syncronization: After configuration, the Time Division Duplex automatically syncs the 1398 to the carrier network which instantly amplifies C-band signal and requires no additional backhaul to extend 5G right away.

Remote Connected Monitoring: Get immediate notification if the 1398 stops working or if band conditions change.

Onboard Software for Intelligent Control: The amplifier is automatically controlled by onboard software, ensuring connectivity throughout large spaces and multi-story buildings. The amplifier will adjust its gain level up or down as required by the conditions of the immediate signal environment.

Additional Flexibility: Dual paths are available for either a 2x2 MIMO or split mode setup.

Color LCD Touch Screen: The Enterprise 1398 system utilize a color LCD touch screen, for assessing amplifier performance and viewing amplifier configuration.

Installation Diagram

MIMO

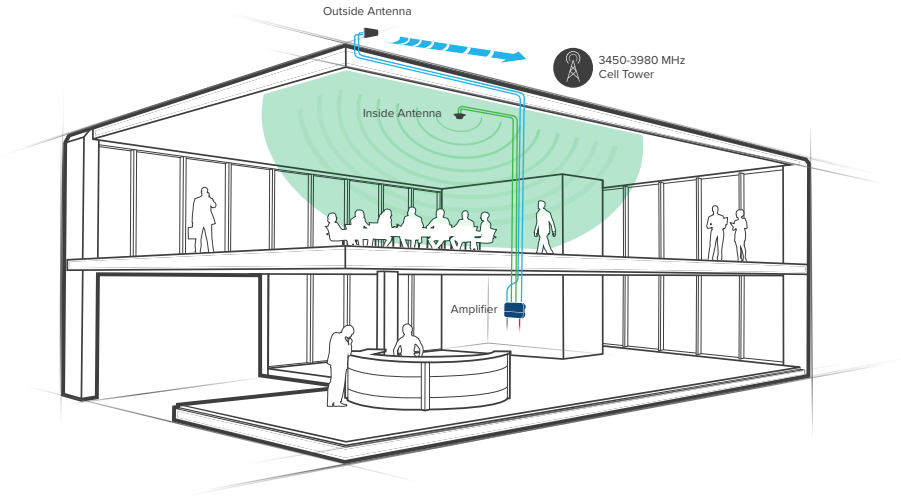

Note: A Wilson Lightning Surge Protector is recommended for all building installations. Make sure the protector is installed outside the building at point of entry connected to a suitable ground and in line between the Outside Antennas and the Signal Amplifier.

Split Mode

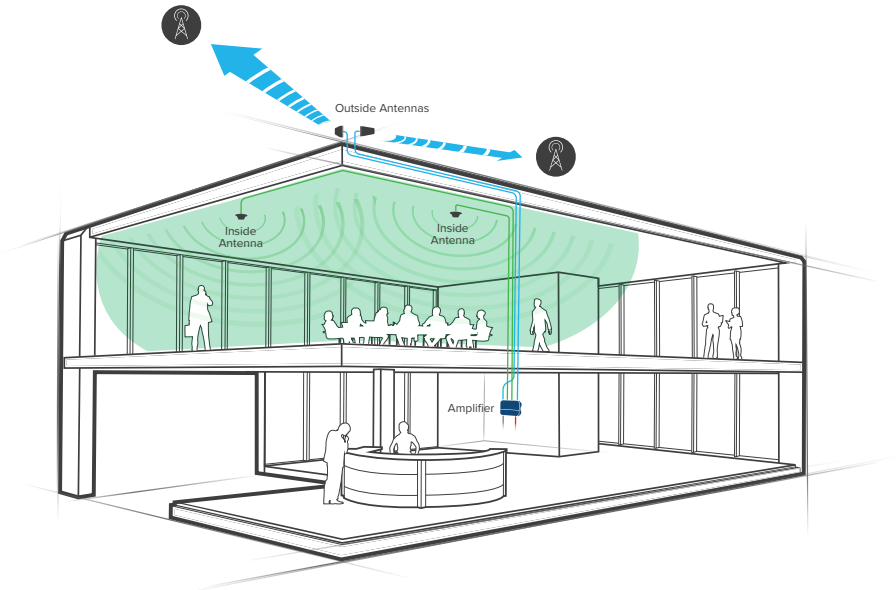

Note: A Wilson Lightning Surge Protector is recommended for all building installations. Make sure the protector is installed outside the building at point of entry connected to a suitable ground and in line between the Outside Antennas and the Signal Amplifier.

Mounting Specifications

Wall Mounting Installation
(for most situations)

Fasten a sheet of 4'x4'x ¾" plywood utilizing 4 x 3/16"x 3" toggle bolts with a minimum tensile rating of 35 lbs, then use 4x #12 x¾" Pan Head Wood Screws or ½" x 2" lag screws to secure the booster to the plywood.

Before assembling and mounting on the wall mount, please reference the below diagram:

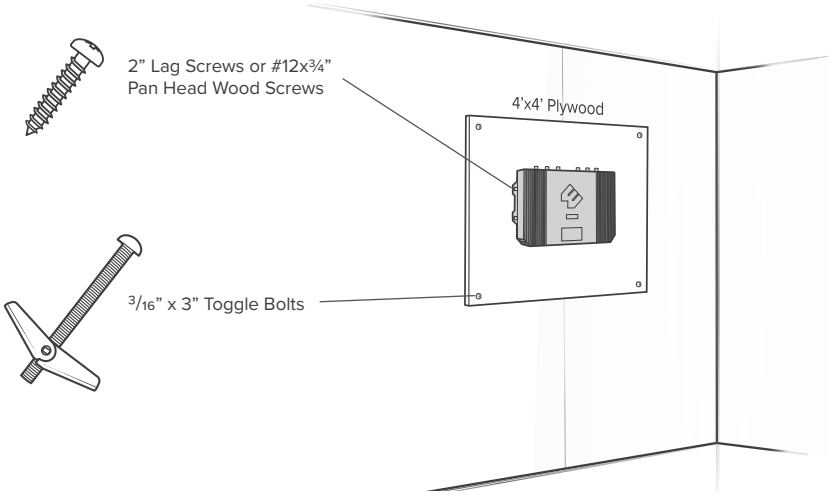

WARNING: Proper installation environment to reduce risks related to the environment, the unit must be installed indoors only. It is the consumer's responsibility to ensure that structural engineering requirements for potential seismic activity are met per your local requirements. This may require wall reinforcement. Do not install near sources of high heat or steam or where condensation is likely to occur, such as near air conditioners. Inspect mounting location conditions to ensure proper wall thickness and no signs of moisture or molding, etc. Do not install on a structure that is prone to vibration or movement. The unit must be plugged into an earthed outlet ONLY.

Rack Mounting Installation

Mount to EIA Standard 19” Server Rack (compliant with EIA-310-D) with 4 standard #10 or #12 cage Screws and Nuts.

Please reference the below diagram:

Standard #10 or #12
Cage Screws & Nuts

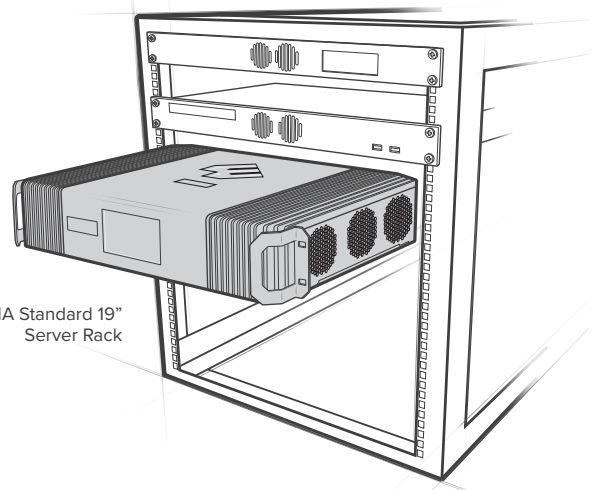

EIA Standard 19”
Server Rack

WARNING: Proper installation environment to reduce risks related to the environment, the unit must be installed indoors only. It is the consumer’s responsibility to ensure that structural engineering requirements for potential seismic activity are met per your local requirements. This may require wall reinforcement. Do not install near sources of high heat or steam or where condensation is likely to occur, such as near air conditioners. Do not install on a structure that is prone to vibration or movement. The power supply must be plugged into an earthed outlet ONLY.

Post-Install Setup

The Enterprise 1398 system is designed with advanced internal programming, which allows it to automatically adjust for a variety of conditions, including the added functionality, alerts, and troubleshooting of an enhanced cloud management and monitoring solution.
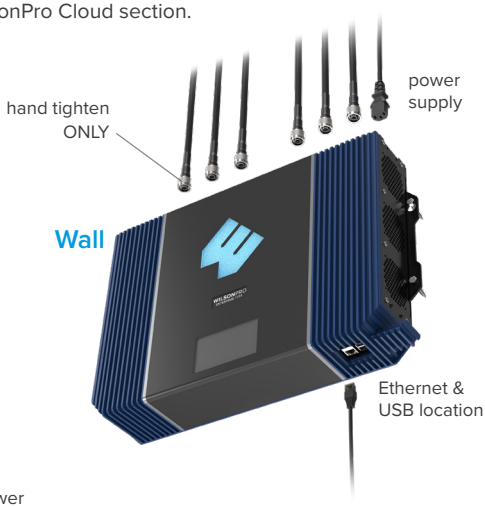
Once the AC power cable and antenna cables are connected, scan the QR code on the Quick Registration Card to add the amplifier to your WilsonPro Cloud account. For detailed instructions see the WilsonPro Cloud section.