Compliance Testing, LLC
Previously Flom Test Lab
EMI, EMC, RF Testing Experts Since 1963

toll-free: (866) 311-3268
fax: (480) 926-3598
http://www.ComplianceTesting.com
info@ComplianceTesting.com

Test Report

Prepared for: Wilson Electronics, LLC (weBoost)

Model: Enterprise 1300 Series (460050 Rack Mount)

Description: Quint Band Signal Booster

Serial Number: 460050C0114721113

FCC ID: PWO460050
ISED: 4726A-460050

To

FCC Part 20
ISED RSS-131 (Issue 3)

Date of Issue: May 31, 2019

On the behalf of the applicant:	**Wilson Electronics, LLC (weBoost)** **3301 E Deseret Drive** **St. George, UT 84790**
To the attention of:	**Phil Weaver, Senior IP and Compliance Engineer** **Ph: (435)673-5021** **Email: pweaver@weboost.com**

Prepared By
Compliance Testing, LLC
1724 S. Nevada Way
Mesa, AZ 85204
(480) 926-3100 phone / (480) 926-3598 fax
www.compliancetesting.com
Project No: p1940017.2

Poona Saber
Project Test Engineer

This report may not be reproduced, except in full, without written permission from Compliance Testing.
All results contained herein relate only to the sample tested.

Test Report Revision History

Revision	Date	Revised By	Reason for Revision
1.0	May 31, 2019	Poona Saber	Original Document
2.0	July 17, 2019	Greg Corbin	Corrected minor formatting errors throughout report. Added antenna maximum gain statement to page 11 Added Antenna gain and EIRP calculation to tables for conducted spurious on page s 23 and 24 per RSS GEN requirements Added PMN, HVIN, UPN, FVIN to page 6 Corrected several plot titles in Annex A – M, changed revision to rev 2.0 for Annex A- M Corrected Output Power at Maximum Input Power on page 14 Added OOBE data for the common port

Table of Contents

Description	Page
Table of Contents	3
Table of Annexes	4
Standard Test Conditions and Engineering Practices	6
Test Result Summary	9
Authorized Frequency Band	10
Maximum Power and Gain	11
Intermodulation	17
Out-of-Band Emissions	19
Conducted Spurious Emissions	25
Noise Limits	29
Uplink Inactivity	34
Variable Gain	35
Occupied Bandwidth	38
Anti-Oscillation	39
Oscillation Mitigation	42
Radiated Spurious	51
Conducted Spurious Emissions with Modem Transmitting	52
Intermodulation with Modem Transmitting	53
Radiated Spurious with Modem Transmitting	56
Isolation	57
Measurement Uncertainty	59
Test Equipment Utilized	60

Table of Annexes

Description	Page
Annex A Authorized Frequency Band	10
Annex B Intermodulation	18
Annex C out of band emission plots	**Error! Bookmark not defined.**
Annex D Conducted Spurious Emission	28
Annex E noise limits and uplink Noise Timing	31
Annex F Uplink Inactivity	34
Annex G Uplink Gain Timing	37
Annex H Occupied Bandwidth	38
Annex I Oscillation Detection	41
Annex J Radiated Spurious Emission	51
Annex K conducted Spurious Emission with cellular modem transmitting	52
Annex L intermodulation with Modem On	55
Annex M Radiated Spurious Emissions with Modem ON	56
Annex N Isolation	58

ILAC / A2LA

Compliance Testing, LLC, has been accredited in accordance with the recognized International Standard ISO/IEC 17025:2005. This accreditation demonstrates technical competence for a defined scope and the operation of a laboratory quality management system (refer to the joint ISO-ILAC-IAF Communiqué dated January 2009).

The tests results contained within this test report all fall within our scope of accreditation, unless noted below.

Please refer to http://www.compliancetesting.com/labscope.html for current scope of accreditation.

Testing Certificate Number: **2152.01**

ACCREDITED
TESTING CERT
#2152.01

FCC Site Reg. #349717

IC Site Reg. #2044A-2

Non-accredited tests contained in this report:

N/A

Test and Measurement Data
Sub-part
2.1033(c)(14):

All tests and measurement data shown were performed in accordance with FCC Rules and Regulations, Part 2, Subpart J and the following individual Parts: 20.21 in conjunction with latest version of KDB 935210.

Standard Test Conditions and Engineering Practices
Except as noted herein, the following conditions and procedures were observed during the testing:

In accordance with ANSI/C63.4-2014, and unless otherwise indicated in the specific measurement results, the ambient temperature of the actual EUT was maintained within the range of 10° to 40°C (50° to 104°F), unless the particular equipment requirements specified testing over a different temperature range. Also, unless otherwise indicated, the humidity levels were in the range of 10% to 90% relative humidity.

Environmental Conditions		
Temp (ºC)	**Humidity (%)**	**Pressure (mbar)**
23.1 – 27.9	26.7 – 41.3	958.4 – 970.2

Measurement results, unless otherwise noted, are worst-case measurements.

EUT Description
Model: Enterprise 1300 Series (460050 inside port rackl mount)
Description: Quint Band Consumer Signal Booster w/ Modem
PMN: 460050
HVIN: 460050
UPN: 460050
FVIN: N/A
Firmware: A460050A
Software:460050A
Serial Number:460050C0114721113
Additional Information:
The EUT is a In-Building bi-directional amplifier for the boosting of cellular phone signals and data communication devices.
The EUT has 1 server port and 3 donor ports and an internal cellular modem. A more detailed description of the server ports, donor ports, and cellular modem are after the frequency band information.

The following frequency bands and emission types are utilized.

Frequency Band (MHz)					
Band Designator	B12	B13	B5	B25	B4
Uplink	698 - 716	776 – 787 (IC, 777 – 787)	824 - 849	1850 - 1915	1710 – 1755
Downlink	728 - 746	746 – 757 (IC, 746 – 756)	869 - 894	1930 - 1995	2110 - 2155
Modulation Type	LTE		GSM, CDMA, EDGE, HSPA. EVDO, LTE		CDMA, HSPA, LTE, EDGE, EVDO

Emission Designators					
CDMA	**HSPA**	**LTE**	**EVDO**	**EDGE**	**GSM**
F9W	F9W	G7D	F9W	G7W	GXW

The modulation types and emission designators listed in the tables represent the modulations that the cell phone providers use for each frequency band. GSM, CDMA, and WCDMA represent all the modulation types (phase and amplitude or a combination thereof) utilized within the industry. EDGE, HSPA, LTE etc. are all protocols or multiplexing techniques using the base modulations.

EUT Operation during Tests

The EUT is an In-building signal booster with 1 server port and 3 donor ports.
The server port is the uplink input and downlink output port.
The donor ports are referred to as Dedicated Donor Ports 1 thru 3, or Dedicated D1 thru D3, and Common D1. The Donor ports are the uplink output and downlink input ports.

The 3 donor ports can be switched between dedicated and common ports.
When the internal switch is set to position 1 the donor port configuration is dedicated and the Cellular Bands are routed thru the dedicated ports per Table 1.
When the switch is set to position 2 the donor port configuration is Common and the Cellular Bands are routed thru the Common port per Table 1.
Note: On the common port, the signal path for dedicated and common ports are the same for Band 4 and Band 25, so the tests for those 2 bands are only documented once per dedicated port.

Table 1 – Donor port assignment

Band	Switch position 1 – Dedicated ports	Switch position 2 – Common ports
12	Donor port 3 (D3)	Donor Port 1 (D1)
13	Donor port 3 (D3)	Donor Port 1 (D1)
5	Donor Port 2 (D2)	Donor Port 1 (D1)
4	Donor Port 1 (D1)	Donor Port 1 (D1)
25	Donor Port 1 (D1)	Donor Port 1 (D1)

The following figure shows the server and donor port configuration.

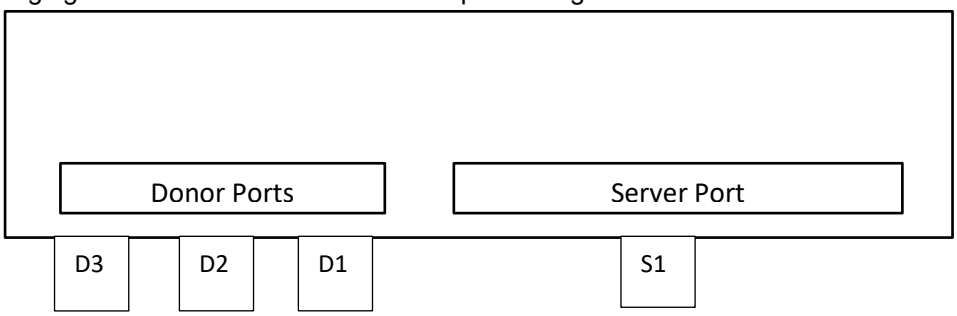

For all tests, the unused server and donor ports (any port not being tested) was terminated with 50 ohm termination.

This device has an internal cellular modem that is used for remote diagnostics and can only transmit on the uplink path. It can transmit on any uplink band.

Test Guidance was used from KDB 935210 D03 Signal Booster Measurements v04r03, KDB Inquiry 782203 (test guidance for common and dedicated ports) and KDB Inquiry 882937 (test guidance for additional tests with internal cellular modem).

KDB inquiry 882937 provides test guidance for consumer boosters with internal cellular modems used for internal diagnostics and remote monitoring capabilities.
The following tests are required per KDB inquiry 882937:

1. Conducted output power with the modem on but not transmitting
2. Conducted spurious, with Modem transmitting and another in-band signal at the input
3. Radiated spurious into a load with Modem transmitting and another in-band signal at the input
4. Noise power with modem on but not transmitting

5. 3 tone intermodulation test.

KDB Inquiry 782203 provides test guidance for consumer boosters with multiple donor ports.
The following tests are required per KDB inquiry 782203:

1. Full port testing for each signal path.
2. Isolation between donor ports for common port and dedicated port operation.

Note: For the common port, the signal path for dedicated and common ports is the same for Band 4 and Band 25, so the tests for those 2 bands are only documented 1 time.

Refer to the individual test sections for additional details for each test.

EUT Operation during Tests

The EUT was in a normal operating condition.
The EUT does not have any external attenuation controls.
The EUT is powered by 120 VAC 60 Hz.

Test Result Summary

Specification		Test Name	Pass, Fail, N/A	Comments
FCC	ISED			
20.21(e)(3)	RSS-131_3.5(a)	Authorized Frequency Band	Pass	
20.21(e)(8)(i)(B) 20.21(e)(8)(i)(C) 20.21(e)(8)(i)(D)	RSS-131_5.1.1.2 RSS-131_5.1.3.3	Maximum Power and Gain	Pass	
20.21(e)(8)(i)(F)	RSS-131_5.1.3.5	Intermodulation	Pass	
20.21(e)(8)(i)(E)	RSS-131_5.1.3.4	Out-of-Band Emissions	Pass	
2.1051 22.917(a) 24.238((a) 27.53(c) 27.53(f) 27.53(g) 27.53(h)	RSS-130_4.7.1 RSS-130_4.7.2 RSS-132_5.5 RSS-133_6.5.1 RSS-139_6.6	Conducted Spurious Emissions	Pass	
20.21(e)(8)(i)(A)	RSS-131_5.1.3.1	Noise Limits	Pass	
20.21(e)(8)(i)(I)	RSS-131_5.1.3.7	Uplink Inactivity	Pass	
20.21(e)(8)(i)(C)(1) 20.21(e)(8)(i)(H) 20.21(e)(8)(i)(C)(2)(i) (Fixed)	RSS-131_5.1.3.2	Variable Gain	Pass	
2.1049	RSS-GEN_6.7	Occupied Bandwidth	Pass	
20.21(e)(8)(ii)(A)	RSS-131_5.1.1.1	Anti - Oscillation	Pass	
2.1053	RSS-GEN_6.13	Radiated Spurious	Pass	
20.21(e)(8)(i)(B)		Spectrum Block Filtering	N/A	This only applies to devices utilizing spectrum block filtering
KDB Inquiry: 883937	N/A	Conducted Spurious w/ modem transmitting	Pass	Additional test required for internal cellular modem
KDB Inquiry: 883937	N/A	3 tone Intermodulation test w/ modem transmitting	Pass	Additional test required for internal cellular modem
KDB Inquiry: 883937	N/A	Radiated Spurious w/ modem transmitting	Pass	Additional test required for internal cellular modem
KDB Inquiry: 782203	N/A	Isolation	Pass	Additional test required multiple donor ports

Authorized Frequency Band
Engineer: Poona Saber
Test Date: 5/8/19

Test Procedure

The EUT was connected to a spectrum analyzer through an attenuator with the losses being input into the spectrum analyzer as a combination of reference level offset and correction factor as needed to ensure accurate readings. A signal generator was utilized to produce a CW input signal tuned to the center channel of the operational band. The RF input level was increased to a point just prior to the AGC being in control of the power. The Signal generator was set to sweep across 2X the operational band of the EUT while the spectrum analyzer was set to MAX HOLD. Two markers were placed at the edges of the operational band and a third marker was placed at the highest point within the band no closer than 2.5 MHz from the band edge.

Test Setup

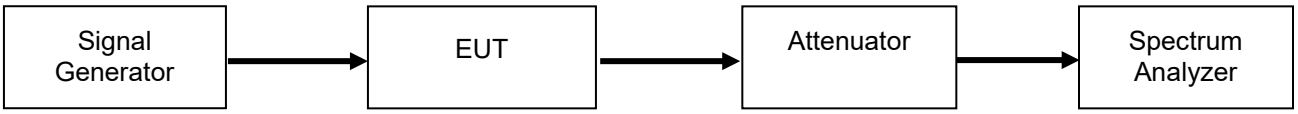

Authorized Frequency Band					Authorized Frequency Band		
Dedicated Ports					Common Ports		
U/L					U/L		
B12	B13	B5	B4	B25	B12	B13	B5
S1 to D3	S1 to D3	S1 to D2	S1 to D1	S1 to D1	S1 to D1	S1 to D1	S1 to D1
D/L					D/L		
B12	B13	B5	B4	B25	B12	B13	B5
D3 to S1	D3 to S1	D2 to S1	D1 to S1	D1 to S1	D1 to S1	D1 to S1	D1 to S1

Annex A Authorized Frequency Band

Refer to Annex A for Authorized Frequency Band plots.

Maximum Power and Gain
Engineer: Poona Saber
Test Date: 5/8/19-5/9/19

Test Procedure

The EUT was connected to a spectrum analyzer through an attenuator with the losses being input into the spectrum analyzer as a combination of reference level offset and correction factor as needed to ensure accurate readings. The spectrum analyzer and signal generator were tuned to the frequency with the highest power level in the band, as determined by the Authorized Frequency Band test. The RF input level was increased to a point just prior to the AGC being in control of the power for both pulsed single time slot GSM modulation and 4.1 MHz AWGN modulation. The maximum power was measured and verified to meet the minimum and maximum levels allowed, with the maximum gain being computed from these values. The uplink and downlink gain under each condition were verified to be within 9 dB of each other.
The input level was incremented in 2 dB steps up to the maximum input level for the EUT. The output power was recorded at the maximum input level. If the EUT shutdown before the maximum input level was reached, the input level was reduced to 1 dB before the EUT shutdown and the input and output levels were recorded.

For Fixed installations the following formula was used for calculating the gain limits.
Gain Limit (dB) = 6.5 dB + 20Log(F_{MHz})
F_{MHz} is the uplink mid-band frequency with the downlink gain limit being equivalent to the paired Uplink band gain limit.

Antenna Gain (dBi)=maximum antenna gain + the minimum cable loss
The maximum antenna gain was provided by the manufacturer in a antenna kitting document which is also referenced in the user manual.
EIRP (dBm)= Measured Level (dBm) + Antenna Gain (dBi)

Test Setup

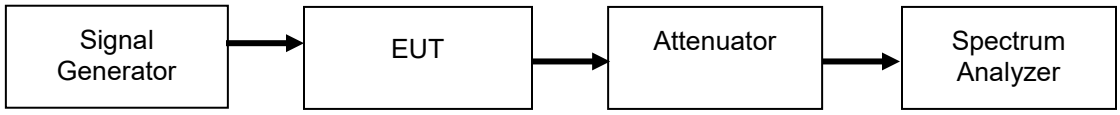

Signal Paths measured for Output Power and Gain

Output Power and Gain					Output Power and Gain		
Dedicated Ports					Common Ports		
U/L					U/L		
B12	**B13**	**B5**	**B4**	**B25**	**B12**	**B13**	**B5**
S1 to D3	S1 to D3	S1 to D2	S1 to D1	S1 to D1	S1 to D1	S1 to D1	S1 to D1
D/L					D/L		
B12	**B13**	**B5**	**B4**	**B25**	**B12**	**B13**	**B5**
D3 to S1	D3 to S1	D2 to S1	D1 to S1	D1 to S1	D1 to S1	D1 to S1	D1 to S1

Dedicated Ports

Uplink Power Test Results

Frequency Band (MHz)	Input Level (dBm)	Output Power (dBm)	Antenna Gain (dBi)	EIRP (dBm)	Lower Limit (dBm)	Upper Limit (dBm)	Result
698 - 716 MHz Pulsed GSM	-39.8	23.5	3.576	27.1	17	30	Pass
698 - 716 MHz AWGN	-38.0	23.9	3.576	27.4	17	30	Pass
776 - 787 MHz Pulsed GSM	-40.5	23.7	3.21	26.9	17	30	Pass
776 - 787 MHz AWGN	-38.8	23.9	3.21	27.1	17	30	Pass
824 - 849 MHz Pulsed GSM	-40.2	24.3	3.012	27.3	17	30	Pass
824 - 849 MHz AWGN	-38.7	25.1	3.012	28.1	17	30	Pass
1710 - 1755 MHz Pulsed GSM	-46.6	23.4	2.048	25.4	17	30	Pass
1710 - 1755 MHz AWGN	-45.4	23.7	2.048	25.7	17	30	Pass
1850 - 1915 MHz Pulsed GSM	-45.0	26.4	1.918	28.3	17	30	Pass
1850 - 1915 MHz AWGN	-43.3	26.7	1.918	28.6	17	30	Pass

Downlink Power Test Results

Frequency Band (MHz)	Input Level (dBm)	Output Power (dBm)	Antenna Gain (dBi)	EIRP (dBm)	Upper Limit (dBm)	Result
728 - 746 MHz Pulsed GSM	-45.3	16.7	-2.43	14.3	17	Pass
728 - 746 MHz AWGN	-46.4	16.1	-2.43	13.7	17	Pass
746 - 757 MHz Pulsed GSM	-46.1	16.5	-1.69	14.8	17	Pass
746 - 757 MHz AWGN	-45.2	16.8	-1.69	15.1	17	Pass
869 - 894 MHz Pulsed GSM	-46.9	16.9	-3.09	13.9	17	Pass
869 - 894 MHz AWGN	-47.1	16.6	-3.09	13.5	17	Pass
2110 - 2155 MHz Pulsed GSM	-51.5	16.8	-0.33	16.4	17	Pass
2110 - 2155 MHz AWGN	-51.4	16.7	-0.33	16.3	17	Pass
1930 - 1995 MHz Pulsed GSM	-54.2	16.8	-1.29	15.5	17	Pass
1930 - 1995 MHz AWGN	-53.9	16.7	-1.29	15.4	17	Pass

Uplink and Downlink Gain Test Results

Modulation	Uplink Frequency (MHz)	Downlink Frequency (MHz)	Uplink Gain (dB)	Uplink Limit (dB)	Downlink Gain (dB)	Downlink Limit (dB)	Delta (dB)	Limit (dB)	Margin (dB)
Pulsed GSM	710.80	743.90	63.3	63.5	62.0	63.48	1.25	9	-7.75
AWGN	710.80	743.90	61.9	63.5	62.5	63.48	0.59	9	-8.41
Pulsed GSM	778.88	746.20	64.2	64.33	62.6	64.36	1.54	9	-7.46
AWGN	778.88	746.20	62.7	64.33	62.0	64.36	0.7	9	-8.3
Pulsed GSM	834.16	876.40	64.5	64.9	63.8	64.94	0.66	9	-8.34
AWGN	834.16	876.40	63.8	64.9	63.7	64.94	0.12	9	-8.88
Pulsed GSM	1736.7	2151.67	70.0	71	68.3	71	1.68	9	-7.32
AWGN	1736.7	2151.67	69.1	71	68.1	71	1.02	9	-7.98
Pulsed GSM	1865.57	1946.13	71.4	72	71.0	72	0.39	9	-8.61
AWGN	1865.57	1946.13	70.0	72	70.6	72	0.6	9	-8.4

Uplink Output Power at Maximum Input Power Test

Frequency Band (MHz)	Maximum Input Level (dBm)	Output Power at Maximum Input Power (dBm)	Antenna Gain (dBi)	EIRP (dBm)	Lower Limit (dBm)	Upper Limit (dBm)	Result
698 - 716 MHz Pulsed GSM	0.0	22.6	3.576	26.1	17	30	Pass
698 - 716 MHz AWGN	0.0	23.8	3.576	27.4	17	30	Pass
776 - 787 MHz Pulsed GSM	0.0	22.8	3.21	26.0	17	30	Pass
776 - 787 MHz AWGN	0.0	23.7	3.21	26.9	17	30	Pass
824 - 849 MHz Pulsed GSM	0.0	23.9	3.012	26.9	17	30	Pass
824 - 849 MHz AWGN	0.0	24.6	3.012	27.6	17	30	Pass
1710 - 1755 MHz Pulsed GSM	0.0	23.3	2.048	25.3	17	30	Pass
1710 - 1755 MHz AWGN	0.0	23.4	2.048	25.4	17	30	Pass
1850 - 1915 MHz Pulsed GSM	0.0	25.7	1.918	27.6	17	30	Pass
1850 - 1915 MHz AWGN	0.0	26.4	1.918	28.3	17	30	Pass

Downlink Output Power at Maximum Input Power Test

Frequency Band (MHz)	Maximum Input Level (dBm)	Output Power at Maximum Input Power (dBm)	Antenna Gain (dBi)	EIRP (dBm)	Upper Limit (dBm)	Resul t
728 - 746 MHz Pulsed GSM	-20.0	16.7	-2.43	13.7	17	Pass
728 - 746 MHz AWGN	-20.0	16.1	-2.43	13.9	17	Pass
746 - 757 MHz Pulsed GSM	-20.0	16.5	-1.69	14.7	17	Pass
746 - 757 MHz AWGN	-20.0	16.8	-1.69	14.9	17	Pass
869 - 894 MHz Pulsed GSM	-20.0	16.9	-3.09	13.7	17	Pass
869 - 894 MHz AWGN	-20.0	16.6	-3.09	13.4	17	Pass
2110 - 2155 MHz Pulsed GSM	-20.0	16.8	-0.33	16.4	17	Pass
2110 - 2155 MHz AWGN	-20.0	16.7	-0.33	16.3	17	Pass
1930 - 1995 MHz Pulsed GSM	-20.0	16.8	-1.29	15.5	17	Pass
1930 - 1995 MHz AWGN	-20.0	16.7	-1.29	15.4	17	Pass

Common ports

Uplink Power Test Results

Frequency Band (MHz)	Input Level (dBm)	Output Power (dBm)	Antenna Gain (dBi)	EIRP (dBm)	Lower Limit (dBm)	Upper Limit (dBm)	Result
698 - 716 MHz Pulsed GSM	-39.9	22.2	3.576	25.8	17	30	Pass
698 - 716 MHz AWGN	-38.0	22.9	3.576	26.5	17	30	Pass
776 - 787 MHz Pulsed GSM	-40.5	22.5	3.21	25.7	17	30	Pass
776 - 787 MHz AWGN	-38.8	22.8	3.21	26.0	17	30	Pass
824 - 849 MHz Pulsed GSM	-40.1	24.0	3.012	27.0	17	30	Pass
824 - 849 MHz AWGN	-38.7	24.7	3.012	27.7	17	30	Pass

Downlink Power Test Results

Frequency Band (MHz)	Input Level (dBm)	Output Power (dBm)	Antenna Gain (dBi)	EIRP (dBm)	Upper Limit (dBm)	Result
728 - 746 MHz Pulsed GSM	-44.4	16.9	-2.43	14.5	17	Pass
728 - 746 MHz AWGN	-42.7	16.7	-2.43	14.2	17	Pass
746 - 757 MHz Pulsed GSM	-45.2	16.5	-1.69	14.9	17	Pass
746 - 757 MHz AWGN	-44.2	16.8	-1.69	15.1	17	Pass
869 - 894 MHz Pulsed GSM	-46.9	16.7	-3.09	13.6	17	Pass
869 - 894 MHz AWGN	-46.4	16.9	-3.09	13.8	17	Pass

Uplink and Downlink Gain Test Results

Modulation	Uplink Frequency (MHz)	Downlink Frequency (MHz)	Uplink Gain (dB)	Uplink Limit (dB)	Downlink Gain (dB)	Downlink Limit (dB)	Delta (dB)	Limit (dB)	Margin (dB)
Pulsed GSM	710.6	743.46	62.1	63.5	61.3	63.5	0.82	9	-8.18
AWGN	710.6	743.46	60.9	63.5	59.4	63.5	1.5	9	-7.5
Pulsed GSM	778.8	746.2	63.0	64.4	61.7	64.4	1.21	9	-7.79
AWGN	778.8	746.2	61.6	64.4	61.0	64.4	0.55	9	-8.45
Pulsed GSM	834.2	878.8	64.1	64.9	63.6	64.9	0.49	9	-8.51
AWGN	834.2	878.8	63.4	64.9	63.3	64.9	0.15	9	-8.85

Uplink Output Power at Maximum Input Power Test

Frequency Band (MHz)	Maximum Input Level (dBm)	Output Power at Maximum Input Power (dBm)	Antenna Gain (dBi)	EIRP (dBm)	Lower Limit (dBm)	Upper Limit (dBm)	Result
698 - 716 MHz Pulsed GSM	0.0	22.0	3.576	25.5	17	30	Pass
698 - 716 MHz AWGN	0.0	22.7	3.576	26.3	17	30	Pass
776 - 787 MHz Pulsed GSM	0.0	21.6	3.21	24.8	17	30	Pass
776 - 787 MHz AWGN	0.0	22.0	3.21	25.2	17	30	Pass
824 - 849 MHz Pulsed GSM	0.0	23.6	3.012	26.6	17	30	Pass
824 - 849 MHz AWGN	0.0	24.4	3.012	27.4	17	30	Pass

Downlink Output Power at Maximum Input Power Test

Frequency Band (MHz)	Maximum Input Level (dBm)	Output Power at Maximum Input Power (dBm)	Antenna Gain (dBi)	EIRP (dBm)	Upper Limit (dBm)	Resul t
728 - 746 MHz Pulsed GSM	-20.0	16.9	-2.43	14.5	17	Pass
728 - 746 MHz AWGN	-20.0	16.4	-2.43	14.0	17	Pass
746 - 757 MHz Pulsed GSM	-20.0	16.5	-1.69	14.9	17	Pass
746 - 757 MHz AWGN	-20.0	16.5	-1.69	14.8	17	Pass
869 - 894 MHz Pulsed GSM	-20.0	16.4	-3.09	13.3	17	Pass
869 - 894 MHz AWGN	-20.0	16.5	-3.09	13.5	17	Pass

Intermodulation
Engineer: Poona Saber
Test Date: 5/7/19-5/8/19

Test Procedure

The EUT was connected to a spectrum analyzer through an attenuator. Two signal generators were utilized to produce two CW signals 600 kHz apart and centered at the peak of the operational band. Attenuator and cable insertion loss correction factors were input to either the signal generator or the spectrum analyzer as required to ensure that accurate measurements were recorded. The input power was set at the maximum allowable power and the RMS intermodulation products were measured to ensure they were less than -19 dBm in a 3 kHz RBW. The uplink and downlink intermodulation products were plotted, with the levels being listed in the summary tables.

The input power was increased in 2 dB increments to 10 dB above the AGC threshold and to verify the intermod products remain below the limit. During this test, the input power was not increased past the maximum allowed.
The Intermodulation level was recorded

Test Setup

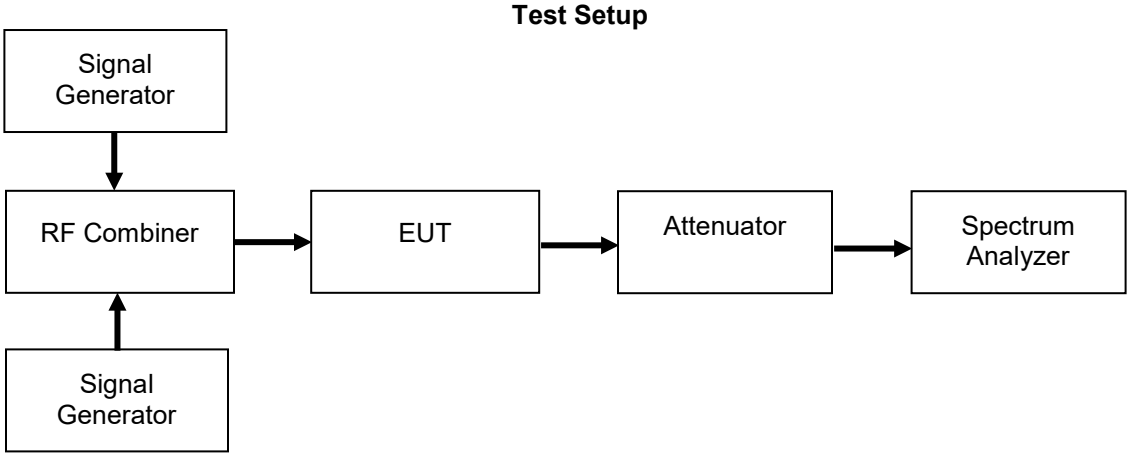

Dedicated ports

Uplink Test Results

Frequency Band (MHz)	Intermodulation Level (dBm)	Limit (dBm)	Result	Intermod Level with Input Power @ AGC + 10 dB	Result (Pass / Fail)
698 - 716 MHz	-19.32	-19	Pass	-20.64	Pass
776 - 787 MHz	-19.94	-19	Pass	-22.6	Pass
824 - 849 MHz	-19.34	-19	Pass	-21.61	Pass
1710 - 1755 MHz	-19.3	-19	Pass	-21.46	Pass
1850 - 1915 MHz	-19.29	-19	Pass	-20.32	Pass

Downlink Test Results

Frequency Band (MHz)	Intermodulation Level (dBm)	Limit (dBm)	Result	Intermod Level with Input Power @ AGC + 10 dB	Result (Pass / Fail)
728 - 746 MHz	-33.53	-19	Pass	-33.51	Pass
746 - 757 MHz	-30.71	-19	Pass	-32.25	Pass
869 - 894 MHz	-37.57	-19	Pass	-37.27	Pass
2110 - 2155 MHz	-29.45	-19	Pass	-31.47	Pass
1930 - 1995 MHz	-37.24	-19	Pass	-37.74	Pass

Common ports

Uplink Test Results

Frequency Band (MHz)	Intermodulation Level (dBm)	Limit (dBm)	Result	Intermod Level with Input Power @ AGC + 10 dB	Result (Pass / Fail)
698 - 716 MHz	-19.34	-19	Pass	-20.75	Pass
776 - 787 MHz	-21.07	-19	Pass	-23.43	Pass
824 - 849 MHz	-20.13	-19	Pass	-19.65	Pass

Downlink Test Resultsv

Frequency Band (MHz)	Intermodulation Level (dBm)	Limit (dBm)	Result	Intermod Level with Input Power @ AGC + 10 dB	Result (Pass / Fail)
728 - 746 MHz	-33.04	-19	Pass	-32.97	Pass
746 - 757 MHz	-30.64	-19	Pass	-32.1	Pass
869 - 894 MHz	-45.44	-19	Pass	-42.07	Pass

Annex B Intermodulation

Refer to Annex B for Intermodulation Test plots

Out-of-Band Emissions
Engineer: Poona Saber
Test Date: 5/14/19

Test Procedure

The EUT was connected to a spectrum analyzer through an attenuator with the losses being input into the spectrum analyzer as a combination of reference level offset and correction factor in order to ensure accurate readings. A signal generator was utilized to produce the following signals: GSM, CDMA, and WCDMA. The signal generator was tuned to the lowest allowable upper and lower channel within the EUT operational band for each respective modulation type. The RF input level was increased to a point just prior to the AGC being in control of the power. For each modulation type the Out of Band Emissions were measured to ensure they met the limits.

The following formula was used for calculating the limits:

Limit = P1 - 6 - (43+ 10Log(P2)) = -19dBm
P1 = power in dBm
P2 = power in Watts

The input power was increased in 2 dB steps up to the maximum input power for the booster being tested. The OOBE was verified to stay below the OOBE Limit. This was recorded as Pass / Fail in the OOBE tables.

Per 935210 D03 page 13, The test report shall include either a statement describing that the device complies at 10 dB above AGC or at the 5.5 power levels, or a table showing compliance at the additional input power(s) required.

The Booster is compliant to the maximum input levels per 935210 D03 section 5.5 which is 0 dBm for fixed boosters.

Test Setup

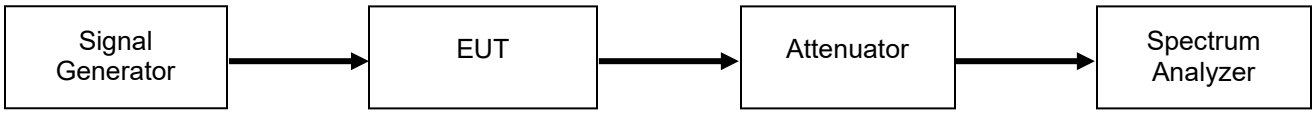

GSM Uplink Test Results

Frequency Band (MHz)	Band Edge	Measured Level (dBm)	Limit (dBm)	Result	OOBE Below Limit at Max Input Power (Yes / No)
698 - 716	Lower	-24.192	-19	Pass	Yes
698 - 716	Upper	-24.87	-19	Pass	Yes
776 - 787	Lower	-22.27	-19	Pass	Yes
776 - 787	Upper	-21.56	-19	Pass	Yes
824 - 849	Lower	-33.46	-19	Pass	Yes
824 - 849	Upper	-33.74	-19	Pass	Yes
1710 - 1755	Lower	-32.98	-19	Pass	Yes
1710 - 1755	Upper	-33.42	-19	Pass	Yes
1850 - 1915	Lower	-29.08	-19	Pass	Yes
1850 - 1915	Upper	-41.02	-19	Pass	Yes

CDMA Uplink Test Results

Frequency Band (MHz)	Band Edge	Measured Level (dBm)	Limit (dBm)	Result	OOBE Below Limit at Max Input Power (Yes / No)
698 - 716	Lower	-36.5	-19	Pass	Yes
698 - 716	Upper	-40.3	-19	Pass	Yes
776 - 787	Lower	-29.93	-19	Pass	Yes
776 - 787	Upper	-33.51	-19	Pass	Yes
824 - 849	Lower	-34.73	-19	Pass	Yes
824 - 849	Upper	-32.4	-19	Pass	Yes
1710 - 1755	Lower	-29	-19	Pass	Yes
1710 - 1755	Upper	-35.05	-19	Pass	Yes
1850 - 1915	Lower	-24.74	-19	Pass	Yes
1850 - 1915	Upper	-47.9	-19	Pass	Yes

WCDMA Uplink Test Results

Frequency Band (MHz)	Band Edge	Measured Level (dBm)	Limit (dBm)	Result	OOBE Below Limit at Max Input Power (Yes / No)
698 - 716	Lower	-52.8	-19	Pass	Yes
698 - 716	Upper	-51.5	-19	Pass	Yes
776 - 787	Lower	-45.24	-19	Pass	Yes
776 - 787	Upper	-46.1	-19	Pass	Yes
824 - 849	Lower	-46.35	-19	Pass	Yes
824 - 849	Upper	-45.27	-19	Pass	Yes
1710 - 1755	Lower	-42.94	-19	Pass	Yes
1710 - 1755	Upper	-42.63	-19	Pass	Yes
1850 - 1915	Lower	-38.52	-19	Pass	Yes
1850 - 1915	Upper	-45.74	-19	Pass	Yes

GSM Downlink Test Results

Frequency Band (MHz)	Band Edge	Measured Level (dBm)	Limit (dBm)	Result	OOBE Below Limit at Max Input Power (Yes / No)
728 - 746 MHz	Lower	-35.4	-19	Pass	Yes
728 - 746 MHz	Upper	-28.59	-19	Pass	Yes
746 - 757 MHz	Lower	-30.07	-19	Pass	Yes
746 - 757 MHz	Upper	-32.85	-19	Pass	Yes
869 - 894 MHz	Lower	-39.07	-19	Pass	Yes
869 - 894 MHz	Upper	-40.58	-19	Pass	Yes
2110 - 2155 MHz	Lower	-40.73	-19	Pass	Yes
2110 - 2155 MHz	Upper	-39.58	-19	Pass	Yes
1930 - 1995 MHz	Lower	-46.47	-19	Pass	Yes
1930 - 1995 MHz	Upper	-41.27	-19	Pass	Yes

CDMA Downlink Test Results

Frequency Band (MHz)	Band Edge	Measured Level (dBm)	Limit (dBm)	Result	OOBE Below Limit at Max Input Power (Yes / No)
728 - 746 MHz	Lower	-53.87	-19	Pass	Yes
728 - 746 MHz	Upper	-51.23	-19	Pass	Yes
746 - 757 MHz	Lower	-51.25	-19	Pass	Yes
746 - 757 MHz	Upper	-53.07	-19	Pass	Yes
869 - 894 MHz	Lower	-48.44	-19	Pass	Yes
869 - 894 MHz	Upper	-48.37	-19	Pass	Yes
2110 - 2155 MHz	Lower	-45.25	-19	Pass	Yes
2110 - 2155 MHz	Upper	--46.65	-19	Pass	Yes
1930 - 1995 MHz	Lower	-56.95	-19	Pass	Yes
1930 - 1995 MHz	Upper	--50.73	-19	Pass	Yes

WCDMA Downlink Test Results

Frequency Band (MHz)	Band Edge	Measured Level (dBm)	Limit (dBm)	Result	OOBE Below Limit at Max Input Power (Yes / No)
728 - 746 MHz	Lower	-57.5	-19	Pass	Yes
728 - 746 MHz	Upper	-53.51	-19	Pass	Yes
746 - 757 MHz	Lower	-56.4	-19	Pass	Yes
746 - 757 MHz	Upper	-58.93	-19	Pass	Yes
869 - 894 MHz	Lower	-48.8	-19	Pass	Yes
869 - 894 MHz	Upper	-50.82	-19	Pass	Yes
2110 - 2155 MHz	Lower	-51.23	-19	Pass	Yes
2110 - 2155 MHz	Upper	-48.83	-19	Pass	Yes
1930 - 1995 MHz	Lower	-52.47	-19	Pass	Yes
1930 - 1995 MHz	Upper	-49.11	-19	Pass	Yes

GSM Uplink Test Results_ Common Port

Frequency Band (MHz)	Band Edge	Measured Level (dBm)	Limit (dBm)	Result	OOBE Below Limit at Max Input Power (Yes / No)
698 - 716	Lower	-28.7	-19	Pass	Yes
698 - 716	Upper	-29.3	-19	Pass	Yes
776 - 787	Lower	-25	-19	Pass	Yes
776 - 787	Upper	-26	-19	Pass	Yes
824 - 849	Lower	-35.5	-19	Pass	Yes
824 - 849	Upper	-35.9	-19	Pass	Yes

CDMA Uplink Test Results_ Common Port

Frequency Band (MHz)	Band Edge	Measured Level (dBm)	Limit (dBm)	Result	OOBE Below Limit at Max Input Power (Yes / No)
698 - 716	Lower	-44.1	-19	Pass	Yes
698 - 716	Upper	-48.9	-19	Pass	Yes
776 - 787	Lower	-31.2	-19	Pass	Yes
776 - 787	Upper	-38	-19	Pass	Yes
824 - 849	Lower	-40.4	-19	Pass	Yes
824 - 849	Upper	-39	-19	Pass	Yes

WCDMA Uplink Test Results_ Common Port

Frequency Band (MHz)	Band Edge	Measured Level (dBm)	Limit (dBm)	Result	OOBE Below Limit at Max Input Power (Yes / No)
698 - 716	Lower	-57.5	-19	Pass	Yes
698 - 716	Upper	-56.5	-19	Pass	Yes
776 - 787	Lower	-49.9	-19	Pass	Yes
776 - 787	Upper	-51.8	-19	Pass	Yes
824 - 849	Lower	-49.3	-19	Pass	Yes
824 - 849	Upper	-49.2	-19	Pass	Yes

GSM Downlink Test Results

Frequency Band (MHz)	Band Edge	Measured Level (dBm)	Limit (dBm)	Result	OOBE Below Limit at Max Input Power (Yes / No)
728 - 746 MHz	Lower	-38.3	-19	Pass	Yes
728 - 746 MHz	Upper	-29.4	-19	Pass	Yes
746 - 757 MHz	Lower	-29.6	-19	Pass	Yes
746 - 757 MHz	Upper	-34.4	-19	Pass	Yes
869 - 894 MHz	Lower	-38	-19	Pass	Yes
869 - 894 MHz	Upper	-40	-19	Pass	Yes

CDMA Downlink Test Results

Frequency Band (MHz)	Band Edge	Measured Level (dBm)	Limit (dBm)	Result	OOBE Below Limit at Max Input Power (Yes / No)
728 - 746 MHz	Lower	-53.5	-19	Pass	Yes
728 - 746 MHz	Upper	-51.1	-19	Pass	Yes
746 - 757 MHz	Lower	-51.5	-19	Pass	Yes
746 - 757 MHz	Upper	-53.1	-19	Pass	Yes
869 - 894 MHz	Lower	-44.1	-19	Pass	Yes
869 - 894 MHz	Upper	-42.5	-19	Pass	Yes

WCDMA Downlink Test Results

Frequency Band (MHz)	Band Edge	Measured Level (dBm)	Limit (dBm)	Result	OOBE Below Limit at Max Input Power (Yes / No)
728 - 746 MHz	Lower	-57.3	-19	Pass	Yes
728 - 746 MHz	Upper	-57.2	-19	Pass	Yes
746 - 757 MHz	Lower	-57.4	-19	Pass	Yes
746 - 757 MHz	Upper	-59.9	-19	Pass	Yes
869 - 894 MHz	Lower	-51	-19	Pass	Yes
869 - 894 MHz	Upper	-53.9	-19	Pass	Yes

Annex C Out of Band Emission plots

Refer to Annex C for Out of Band Emission plots

Conducted Spurious Emissions
Engineer: Poona Saber
Test Date: 6/16/19

Test Procedure

The EUT was connected to a spectrum analyzer through an attenuator, with the losses being input into the spectrum analyzer as a combination of reference level offset and correction factor as needed to ensure accurate readings. A signal generator was utilized to produce a 4.1 MHz AWGN signal operating at the maximum allowable power. The conducted spurious emissions from 9 kHz to 10 times the highest tunable frequency for each operational band were measured (excluding the band defined by the Out of band emissions test). The emissions were plotted and the highest level was recorded in the summary table.

The following formulas are used for calculating the limits.

Conducted Spurious Emissions Limit = P1 – (43+ 10Log(P2)) = -13 dBm
P1 = power in dBm
P2 = power in Watts

Antenna Gain (dBi)=maximum antenna gain + the minimum cable loss
The maximum antenna gain was provided by the manufacturer in a antenna kitting document which is also referenced in the user manual.
EIRP (dBm)= Measured Level (dBm) + Antenna Gain (dBi)

Test Setup

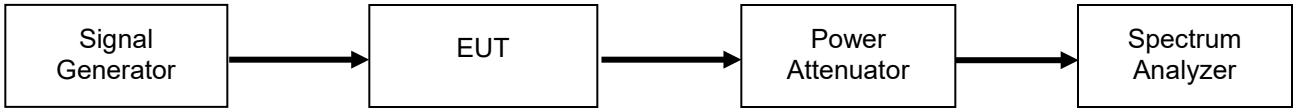

Uplink Test Results

Dedicated

Frequency Band (MHz)	Measured Frequency (MHz)	Measured Level (dBm)	Antenna Gain (dBi)	EIRP (dBm)	Limit (dBm)	Result
698 - 716	716.1	-22.9	3.579	-19.32	-13	Pass
776 - 787	787.17	-25.17	3.21	-21.96	-13	Pass
824 - 849	2509	-31.43	3.012	-28.42	-13	Pass
1710 - 1755	1863	-26.79	2.048	-24.74	-13	Pass
1850 - 1915	1733	-36.81	1.918	-34.89	-13	Pass

Common

Frequency Band (MHz)	Measured Frequency (MHz)	Measured Level (dBm)	Antenna Gain (dBi)	EIRP (dBm)	Limit (dBm)	Result
698 - 716	783.8	-36.72	3.579	-33.14	-13	Pass
776 - 787	2343.8	-33.54	3.21	-30.33	-13	Pass
824 - 849	850	-31.78	3.012	-28.77	-13	Pass

Downlink Test Results

Dedicated

Frequency Band (MHz)	Measured Frequency (MHz)	Measured Level (dBm)	Antenna Gain (dBi)	EIRP (dBm)	Limit (dBm)	Result
728 - 746	1968.2	-29	-2.43	-31.43	-13	Pass
746 - 757	757.1	-42.47	-1.69	-44.16	-13	Pass
869 - 894	1945	-29.57	-3.09	-32.66	-13	Pass
2110 - 2155	1960.8	-26.93	-0.33	-27.26	-13	Pass
1930 - 1995	2112.7	-30.33	-1.29	-31.62	-13	Pass

Common

Frequency Band (MHz)	Measured Frequency (MHz)	Measured Level (dBm)	Antenna Gain (dBi)	EIRP (dBm)	Limit (dBm)	Result
728 - 746	1944.7	-29.56	-2.43	-31.99	-13	Pass
746 - 757	757.1	--30.43	-1.69	-23.58	-13	Pass
869 - 894	1968.1	-27.67	-3.09	-30.76	-13	Pass

For the 746 – 758 downlink and 776 – 788 Uplink bands of operation, the following additional spurious emissions requirements apply.

FCC 27.53(c)
For operations in the 746-758 MHz band and the 776-788 MHz band, the power of any emission outside the licensee's frequency band(s) of operation shall be attenuated below the transmitter power (P) within the licensed band(s) of operation, measured in watts, in accordance with the following:

(3) On all frequencies between 763-775 MHz and 793-805 MHz, by a factor not less than 76 + 10 log (P) dB in a 6.25 kHz band segment, for base and fixed stations;

The test is performed using a 10 kHz RBW. Since the limit is referenced to a 6.25 kHz BW, the following correction factor is applied to the measured data.

BW correction Factor = 10Log B1/B2
BW correction Factor =10Log 6.25 / 10 = - 2.0 dB

Final Value (dBm) = conducted measurement +BW correction factor

776 – 787 MHz Uplink Band
Dedicated

Spurious Frequency Range (MHz)	Measured Frequency (MHz)	Measured Value (dBm)	Bandwidth Correction Factor (dB)	Final Value (dBm)	Limit (dBm)	Margin (dB)
763 – 775	774.6	-55.11	-2.0	-57.15	-46	-11.15
793 – 805	793.1	-60.49	-2.0	-62.53	-46	-16.53

Common

Spurious Frequency Range (MHz)	Measured Frequency (MHz)	Measured Value (dBm)	Bandwidth Correction Factor (dB)	Final Value (dBm)	Limit (dBm)	Margin (dB)
763 – 775	774.976	-50.0	-2.0	--52.0	-46	-6.0
793 – 805	793.17	-79.6	-2.0	-81.64	-46	-35.64

746 - 757 MHz Downlink Band
Dedicated

Spurious Frequency Range (MHz)	Measured Frequency (MHz)	Measured Value (dBm)	Bandwidth Correction Factor (dB)	Final Value (dBm)	Limit (dBm)	Margin (dB)
763 – 775	767.49	-69.62	-2.0	-71.66	-46	-25.66
793 – 805	803.31	-69.78	-2.0	-71.82	-46	-25.82

Common

Spurious Frequency Range (MHz)	Measured Frequency (MHz)	Measured Value (dBm)	Bandwidth Correction Factor (dB)	Final Value (dBm)	Limit (dBm)	Margin (dB)
763 – 775	763.75	-69.22	-2.0	-71.26	-46	-25.26
793 – 805	804.89	-72.81	-2.0	-74.85	-46	-28.85

FCC 27.53(e)
For operations in the 746-758 MHz, 775-788 MHz, and 805-806 MHz bands, emissions in the band 1559-1610 MHz shall be limited to −70 dBW/MHz equivalent isotropically radiated power (EIRP) for wideband signals, and −80 dBW EIRP for discrete emissions of less than 700 Hz bandwidth. For the purpose of equipment authorization, a transmitter shall be tested with an antenna that is representative of the type that will be used with the equipment in normal operation.

Since the limit is referenced to EIRP, the final data is computed using the Conducted Spurious Emission data and adding the BW correction factor plus the final gain/loss data from the antenna kitting information supplied by the manufacturer. For the Narrowband measurement, the test is performed using a 10 kHz RBW. Since the limit is referenced to a 700 Hz BW, the following correction factor is applied to the measured data.
BW correction Factor = 10Log B1/B2
BW correction Factor =10Log 700 / 10000 = -11.55 dB

Final Value (dBm) = conducted measurement +BW correction factor + final gain/loss from Antenna Kitting document

The Limit for discreet (narrowband) emissions is -80dBW (-50 dBm) in 700 MHz BW.
The Limit for (wideband Emissions) is -70 dBW (-40 dBm) in a 1 MHz BW.

776 – 787 MHz Uplink Band
Dedicated

Spurious Frequency Range (MHz)	Measured Frequency (MHz)	Measured Value (dBm)	Bandwidth Correction Factor (dB)	Gain/Loss from Antenna Kitting Information (dB)	Final Value (dBm)	Limit (dBm)	Margin (dB)
1559 – 1610 (Wideband)	1601.1	-49.81	0	3.21	-46.60	-40	-6.60
1559 – 1610 (Narrowband)	1569	-68.87	-11.55	3.21	-77.21	-50	-27.21

Common

Spurious Frequency Range (MHz)	Measured Frequency (MHz)	Measured Value (dBm)	Bandwidth Correction Factor (dB)	Gain/Loss from Antenna Kitting Information (dB)	Final Value (dBm)	Limit (dBm)	Margin (dB)
1559 – 1610 (Wideband)	1560.4	-71.94	0	3.21	-68.73	-40	-28.73
1559 – 1610 (Narrowband)	1565.6	-93.02	-11.55	3.21	-101.36	-50	-51.36

746 - 757 MHz Downlink Band
Dedicated

Spurious Frequency Range (MHz)	Measured Frequency (MHz)	Measured Value (dBm)	Bandwidth Correction Factor (dB)	Gain/Loss from Antenna Kitting Information (dB)	Final Value (dBm)	Limit (dBm)	Margin (dB)
1559 – 1610 (Wideband)	1601.1	-49.99	0	-1.69	-51.68	-40	-11.68
1559 – 1610 (Narrowband)	1569	-68.57	-11.55	-1.69	-81.81	-50	-31.81

Common

Spurious Frequency Range (MHz)	Measured Frequency (MHz)	Measured Value (dBm)	Bandwidth Correction Factor (dB)	Gain/Loss from Antenna Kitting Information (dB)	Final Value (dBm)	Limit (dBm)	Margin (dB)
1559 – 1610 (Wideband)	1581.7	-51.26	0	-1.69	-52.95	-40	-12.95
1559 – 1610 (Narrowband)	1592.37	-72.18	-11.55	-1.69	-85.42	-50	-35.42

Annex D Conducted Spurious Emission

Refer to Annex D for Conducted Spurious Emission plots.

Noise Limits
Engineer: Poona Saber
Test Date: 5/7/19

Test Procedure

The EUT was connected to a spectrum analyzer through an attenuator with the losses being input into the spectrum analyzer as a combination of reference level offset and correction factor as necessary to ensure that accurate readings were obtained. A series of three tests were performed: the maximum uplink and downlink noise, the variable noise for the uplink and downlink in the presence of a downlink signal, and the variable uplink noise timing. The detailed procedures from the latest version of KDB 935210 D03 were followed.

For all other installations the Noise Limit is calculated using the following formula.

The following formulas are used for calculating the limits. Note – Downlink noise power limit is calculated with the center frequency of the associated uplink band.

Noise Power =-102.5+LOG10(Band Center Frequency)*20

Variable Noise =-103 dBm/MHz-RSSI

Test Setup

Maximum Noise Power

Variable Uplink Noise Power and Timing

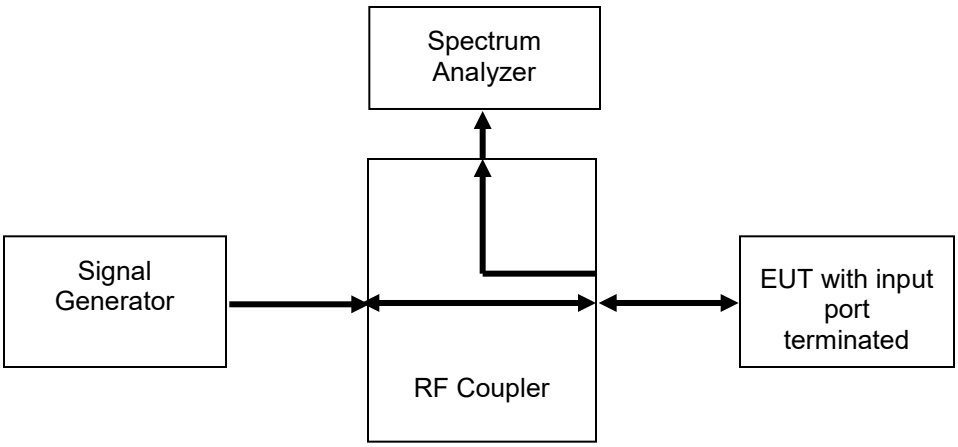

Dedicated

Maximum Uplink Noise Test Results

Frequency Band (MHz)	Measured Noise (dBm)	Limit (dBm)	Margin (dB)	Result
698 - 716	-48.4	-45.5	-2.9	Pass
776 - 787	-45.34	-44.6	-0.7	Pass
824 - 849	-45.1	-44.1	-1.0	Pass
1710 - 1755	-38.88	-37.7	-1.2	Pass
1850 - 1915	-38.38	-37.0	-1.4	Pass

Maximum Downlink Noise Test Results

Frequency Band (MHz)	Measured Noise (dBm)	Limit (dBm)	Margin (dB)	Result
728 - 746	-48.87	-45.5	-3.4	Pass
746 - 757	-47	-44.6	-2.4	Pass
869 - 894	-46.8	-44.1	-2.7	Pass
2110 - 2155	-37.9	-37.7	-0.2	Pass
1930 - 1995	-39.9	-37.0	-2.9	Pass

Uplink Noise Timing Test Results

Frequency Band (MHz)	Measured Timing (Seconds)	Limit (Seconds)	Result
698 - 716	0.75	3.0	Pass
776 - 787	0.75	3.0	Pass
824 - 849	0.95	3.0	Pass
1710 - 1755	0.83	3.0	Pass
1850 - 1915	1.05	3.0	Pass

Common

Maximum Uplink Noise Test Results

Frequency Band (MHz)	Measured Noise (dBm)	Limit (dBm)	Margin (dB)	Result
698 - 716	-49.53	-45.5	-4.0	Pass
776 - 787	-46.02	-44.6	-1.4	Pass
824 - 849	-45.06	-44.1	-1.0	Pass

Uplink Noise Timing Test Results

Frequency Band (MHz)	Measured Timing (Seconds)	Limit (Seconds)	Result
698 - 716	0.80	3.0	Pass
776 - 787	0.78	3.0	Pass
824 - 849	0.63	3.0	Pass

Annex E Noise Limits and Uplink Noise Timing

Refer to Annex E for Noise Limits and Uplink Noise Timing Plots

Variable Uplink Noise Limit Test Results

Dedicated ports

698 - 716 MHz

RSSI (dBm)	Noise Limit (dBm)	Measured Noise (dBm)	Margin (dB)
-56	-47.0	-49.4	-2.4
-55.0	-48.0	-50.5	-2.5
-54.0	-49.0	-51.3	-2.3
-53.0	-50.0	-52.5	-2.5
-52.0	-51.0	-53.6	-2.6
-41.0	-62.0	-64.4	-2.4

776 - 787 MHz

RSSI (dBm)	Noise Limit (dBm)	Measured Noise (dBm)	Margin (dB)
-47.0	-56.0	-56.6	-0.6
-46.0	-57.0	-57.9	-0.9
-45.0	-58.0	-59	-1.0
-44.0	-59.0	-59.9	-0.9
-42.0	-61.0	-61.9	-0.9
-34.0	-69.0	-69.9	-0.9

824 - 849 MHz

RSSI (dBm)	Noise Limit (dBm)	Measured Noise (dBm)	Margin (dB)
-56.0	-47.0	-49.6	-2.6
-55.0	-48.0	-50.4	-2.4
-54.0	-49.0	-51.7	-2.7
-53.0	-50.0	-52.8	-2.8
-34.0	-69.0	-71.4	-2.4
-33.0	-70.0	-72.1	-2.1

1710 - 1755 MHz

RSSI (dBm)	Noise Limit (dBm)	Measured Noise (dBm)	Margin (dB)
-63.0	-40.0	-40.6	-0.6
-62.0	-41.0	-41.7	-0.7
-61.0	-42.0	-42.8	-0.8
-60.0	-43.0	-43.9	-0.9
-59.0	-44.0	-45	-1.0
-57.0	-46.0	-47	-1.0

1850 - 1915 MHz

RSSI (dBm)	Noise Limit (dBm)	Measured Noise (dBm)	Margin (dB)
-65.0	-38.0	-40.4	-2.4
-64.0	-39.0	-41.5	-2.5
-63.0	-40.0	-42.1	-2.1
-62.0	-41.0	-43.4	-2.4
-61.0	-42.0	-44.6	-2.6
-35.0	-68.0	-70.6	-2.6

Variable Uplink Noise Limit Test Results

Common ports

698 - 716 MHz

RSSI (dBm)	Noise Limit (dBm)	Measured Noise (dBm)	Margin (dB)
-56.0	-47.0	-49.1	-2.1
-55.0	-48.0	-50	-2.0
-54.0	-49.0	-51.1	-2.1
-51.0	-52.0	-54.3	-2.3
-50.0	-53.0	-55.2	-2.2
-53.0	-50.0	-52.5	-2.5

776 - 787 MHz

RSSI (dBm)	Noise Limit (dBm)	Measured Noise (dBm)	Margin (dB)
-57.0	-46.0	-46.5	-0.5
-56.0	-47.0	-47.4	-0.4
-55.0	-48.0	-48.4	-0.4
-54.0	-49.0	-49.7	-0.7
-53.0	-50.0	-50.6	-0.6
-52.0	-51.0	-51.8	-0.8

824 - 849 MHz

RSSI (dBm)	Noise Limit (dBm)	Measured Noise (dBm)	Margin (dB)
-60.0	-44.1	-45.9	-1.8
-59.0	-44.1	-46.8	-2.7
-56.0	-47.0	-49.8	-2.8
-35.0	-68.0	-71	-3.0
-34.0	-69.0	-71.9	-2.9
-33.0	-70.0	-72.5	-2.5

Uplink Inactivity
Engineer: Poona Saber
Test Date: 5/23/19

Test Procedure

The EUT was connected directly to a spectrum analyzer set to operate in the center of the EUT operational uplink and downlink bands. The span was set to 0 Hz with a sweep time of 330 seconds and MAX HOLD operation. The EUT was powered on and the time for the uplink to return to an inactive state was measured using the DELTA MARKER method to ensure that it was less than 300 seconds. The noise level after the return to an inactive state was less than -70 dBm/MHz.

Test Setup

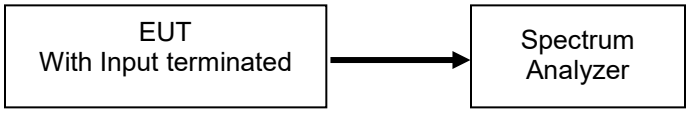

Uplink Test Results

Dedicated Ports

Frequency Band (MHz)	Measured Time (Seconds)	Limit (Seconds)	Result
698 – 716	281.1	300	Pass
776 – 787	282.2	300	Pass
824 – 849	282.2	300	Pass
1710 – 1755	286.2	300	Pass
1850 – 1915	286.2	300	Pass

Common Port

Frequency Band (MHz)	Measured Time (Seconds)	Limit (Seconds)	Result
698 - 716	285.6	300	Pass
776 - 787	286.2	300	Pass
824 - 849	286.2	300	Pass

Annex F Uplink Inactivity

Refer to Annex F for Uplink Inactivity Plots

Variable Gain
Engineer: Poona Saber
Test Date: 5/9/19

Test Procedure

The EUT was connected to a spectrum analyzer through an attenuator with the losses being input into the spectrum analyzer as a combination of reference level offset and correction factor in order to ensure accurate readings were obtained. The uplink gain in the presence of a downlink signal was measured for each operational uplink band using the detailed procedures from the latest version of KDB 935210 D03.

The following formula is used for calculating the limits:

Variable Gain = -34 dB - RSSI +MSCL

Test Setup

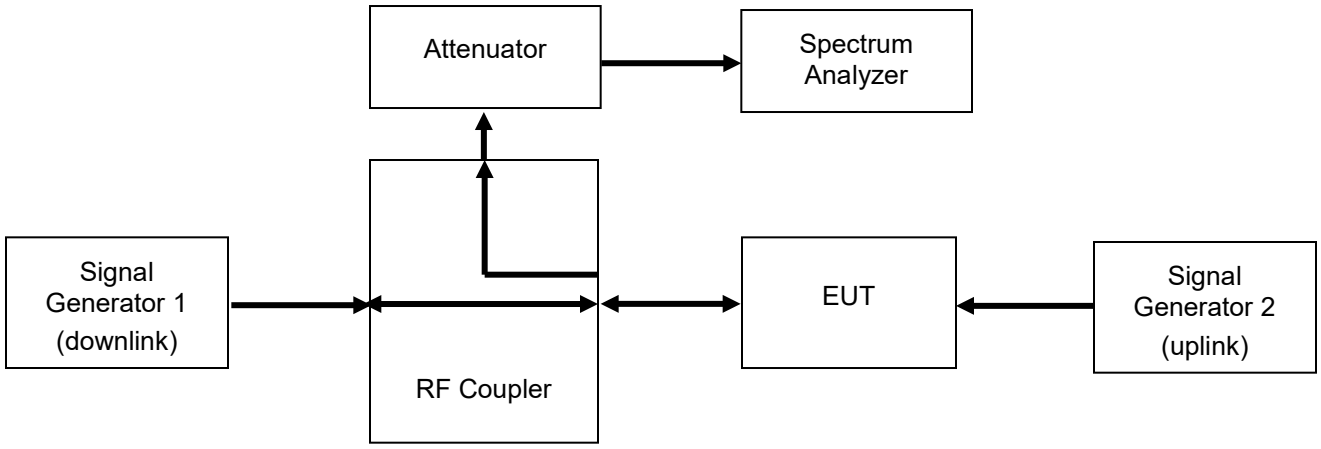

Uplink Test Results

Dedicated Ports

698 - 716 MHz

RSSI (dBm)	MSCL (dB)	Gain Limit (dBm)	P(in) (dBm)	P(out) (dBm)	Gain (dB)	Margin (dB)
-59.0	40.2	63.5	-43.0	18.6	61.7	-1.8
-58.0	40.2	63.5	-43.0	18.6	61.6	-1.9
-57.0	40.2	63.2	-43.0	18.6	61.6	-1.5
-56.0	40.2	62.2	-43.0	17.1	60.1	-2.0
-55.0	40.2	61.2	-43.0	16.1	59.1	-2.0
-54.0	40.2	60.2	-43.0	14.5	57.6	-2.6

776 - 787 MHz

RSSI (dBm)	MSCL (dB)	Gain Limit (dBm)	P(in) (dBm)	P(out) (dBm)	Gain (dB)	Margin (dB)
-60.0	40.3	64.0	-43.8	18.3	62.1	-1.9
-59.0	40.3	64.0	-43.8	18.3	62.1	-1.9
-58.0	40.3	64.0	-43.8	17.8	61.6	-2.5
-57.0	40.3	63.3	-43.8	16.7	60.5	-2.7
-56.0	40.3	62.3	-43.8	15.8	59.6	-2.7
-55.0	40.3	61.3	-43.8	14.2	58.0	-3.3

824 - 849 MHz

RSSI (dBm)	MSCL (dB)	Gain Limit (dBm)	P(in) (dBm)	P(out) (dBm)	Gain (dB)	Margin (dB)
-60.0	42.3	65.0	-43.7	18.8	62.5	-2.6
-59.0	42.3	65.0	-43.7	17.7	61.4	-3.6
-58.0	42.3	65.0	-43.7	16.5	60.2	-4.8
-57.0	42.3	65.0	-43.7	15.4	59.1	-5.9
-56.0	42.3	64.3	-43.7	14.3	58.0	-6.2
-55.0	42.3	63.3	-43.7	13.3	57.0	-6.3

1710 - 1755 MHz

RSSI (dBm)	MSCL (dB)	Gain Limit (dBm)	P(in) (dBm)	P(out) (dBm)	Gain (dB)	Margin (dB)
-70.0	45.8	71.3	-50.4	18.4	68.8	-2.5
-69.0	45.8	71.3	-50.4	17.8	68.2	-3.1
-68.0	45.8	71.3	-50.4	18.4	68.8	-2.5
-67.0	45.8	71.3	-50.4	18.3	68.7	-2.6
-66.0	45.8	71.3	-50.4	18.3	68.7	-2.6
-65.0	45.8	71.3	-50.4	17.9	68.3	-3.0

1850 - 1915 MHz

RSSI (dBm)	MSCL (dB)	Gain Limit (dBm)	P(in) (dBm)	P(out) (dBm)	Gain (dB)	Margin (dB)
-67.0	47.5	72.0	-48.3	18.9	67.2	-4.8
-66.0	47.5	72.0	-48.3	17.8	66.1	-5.9
-65.0	47.5	72.0	-48.3	16.5	64.8	-7.2
-64.0	47.5	72.0	-48.3	15.3	63.6	-8.5
-63.0	47.5	72.0	-48.3	14.4	62.7	-9.4
-62.0	47.5	72.0	-48.3	12.5	60.8	-11.2

Common Ports

698 - 716 MHz

RSSI (dBm)	MSCL (dB)	Gain Limit (dBm)	P(in) (dBm)	P(out) (dBm)	Gain (dB)	Margin (dB)
-57.0	40.2	63.2	-43.0	17.4	60.4	-2.8
-56.0	40.2	62.2	-43.0	17.4	60.4	-1.8
-55.0	40.2	61.2	-43.0	15.9	58.9	-2.3
-54.0	40.2	60.2	-43.0	14.8	57.7	-2.4
-53.0	40.2	59.2	-43.0	13.1	56.1	-3.0
-52.0	40.2	58.2	-43.0	12.1	55.1	-3.1

776 - 787 MHz

RSSI (dBm)	MSCL (dB)	Gain Limit (dBm)	P(in) (dBm)	P(out) (dBm)	Gain (dB)	Margin (dB)
-60.0	40.3	64.0	-43.8	17.0	60.8	-3.2
-59.0	40.3	64.0	-43.8	17.0	60.8	-3.2
-58.0	40.3	64.0	-43.8	17.0	60.8	-3.2
-57.0	40.3	63.3	-43.8	16.6	60.4	-2.9
-56.0	40.3	62.3	-43.8	15.6	59.4	-2.9
-55.0	40.3	61.3	-43.8	14.1	57.9	-3.4

824 - 849 MHz

RSSI (dBm)	MSCL (dB)	Gain Limit (dBm)	P(in) (dBm)	P(out) (dBm)	Gain (dB)	Margin (dB)
-60.0	42.3	65.0	-43.7	18.8	62.5	-2.5
-59.0	42.3	65.0	-43.7	17.8	61.5	-3.6
-58.0	42.3	65.0	-43.7	16.7	60.4	-4.6
-57.0	42.3	65.0	-43.7	15.0	58.7	-6.3
-56.0	42.3	64.3	-43.7	14.0	57.7	-6.6
-55.0	42.3	63.3	-43.7	12.8	56.5	-6.7

Uplink Gain Timing Test Results

Dedicated Ports

Frequency Band (MHz)	Measured Timing (Seconds)	Limit (Seconds)	Result
704 - 716	0.75	3.0	Pass
776 - 787	1.27	3.0	Pass
824 - 849	1.27	3.0	Pass
1710 - 1755	0.81	3.0	Pass
1850 - 1915	1.15	3.0	Pass

Common Port

Frequency Band (MHz)	Measured Timing (Seconds)	Limit (Seconds)	Result
704 - 716	0.81	3.0	Pass
776 - 787	0.57	3.0	Pass
824 - 849	1.16	3.0	Pass

Annex G Uplink Gain Timing

Refer to Annex G for Uplink Gain Timing Plots

Occupied Bandwidth
Engineer: Poona Saber
Test Date: 5/13/19

Test Procedure

The EUT was connected to a spectrum analyzer through an attenuator with the losses being input into the spectrum analyzer as a combination of reference level offset and correction factor as required to ensure that accurate readings were obtained. A signal generator was utilized to produce the following signals: GSM, CDMA, and WCDMA. The signal generator was tuned to the center channel of each of the EUT operational uplink and downlink bands with the RF level set at a point just prior to the AGC being in control of the power. For each modulation type, the input and output signal was measured and plotted to ensure that the signals were similar.

Test Setup

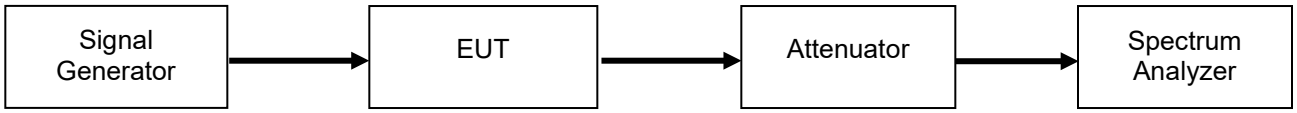

Annex H Occupied Bandwidth

Refer to Annex H for Occupied Bandwidth plots

Anti-Oscillation
Engineer: Poona Saber
Test Date: 5/15/19

Test Procedure

The EUT was connected to a spectrum analyzer set for zero span mode. The EUT uplink and downlink were loop backed to each other through a selectable band pass filter and variable attenuator. The EUT uplink and downlink were tested to ensure that the presence of oscillation was detected and that the EUT output turned off within 300 mS for the Uplink and 1 second for the Downlink and remained off for 1 minute. The time was extended to capture how many times the unit attempted to restart.

Test Setup

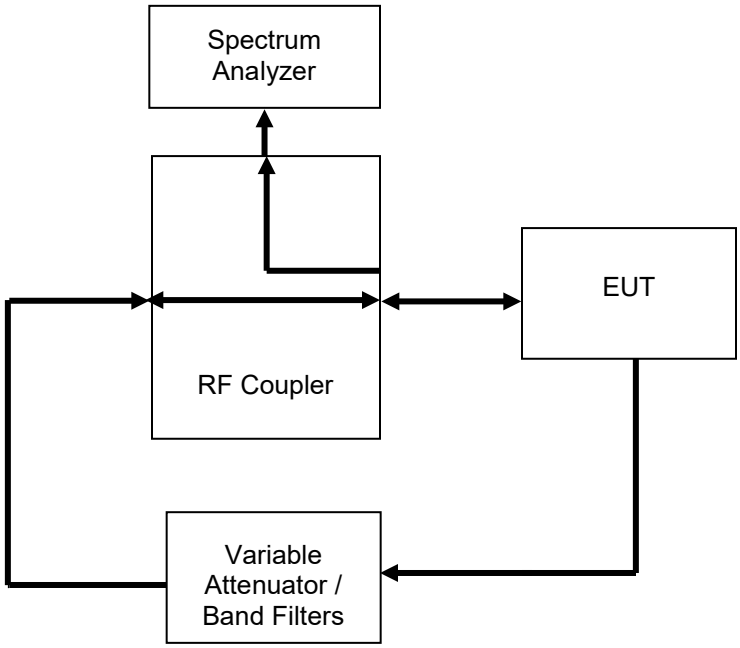

Dedicated Ports

Uplink Detection Time Test Results

Frequency Band (MHz)	Measured Time (mS)	Limit (mS)	Result
698 - 716	120	300	Pass
776 - 787	112.5	300	Pass
824 - 849	140	300	Pass
1710 - 1755	87.5	300	Pass
1850 - 1915	87.5	300	Pass

Downlink Detection Time Test Results

Frequency Band (MHz)	Measured Time (mS)	Limit (mS)	Result
728 - 746	200	1000	Pass
746 - 757	160.2	1000	Pass
869 - 894	96.1	1000	Pass
2110 - 2155	99.1	1000	Pass
1930 - 1995	100	1000	Pass

Uplink Restart Time Test Results

Frequency Band (MHz)	Measured Time (S)	Limit (S)	Result
698 - 716	No restart	≥60	Pass
776 - 787	No restart	≥60	Pass
824 - 849	No restart	≥60	Pass
1710 - 1755	No restart	≥60	Pass
1850 - 1915	No restart	≥60	Pass

Downlink Restart Time Test Results

Frequency Band (MHz)	Measured Time (S)	Limit (S)	Result
728 - 746	No restart	≥60	Pass
746 - 757	No restart	≥60	Pass
869 - 894	No restart	≥60	Pass
2110 - 2155	No restart	≥60	Pass
1930 - 1995	No restart	≥60	Pass

Uplink Restart Count Test Results

Frequency Band (MHz)	Restarts	Limit	Result
698 - 716	0	≤5	Pass
776 - 787	0	≤5	Pass
824 - 849	0	≤5	Pass
1710 - 1755	0	≤5	Pass
1850 - 1915	0	≤5	Pass

Downlink Restart Count Test Results

Frequency Band (MHz)	Restarts	Limit	Result
728 - 746	0	≤5	Pass
746 - 757	0	≤5	Pass
869 - 894	0	≤5	Pass
2110 - 2155	0	≤5	Pass
1930 - 1995	0	≤5	Pass

Common Port

Uplink Detection Time Test Results

Frequency Band (MHz)	Measured Time (mS)	Limit (mS)	Result
698 - 716	137.5	300	Pass
776 - 787	125	300	Pass
824 - 849	112.5	300	Pass

Downlink Detection Time Test Results

Frequency Band (MHz)	Measured Time (mS)	Limit (mS)	Result
728 - 746	135.1	1000	Pass
746 - 757	111.1	1000	Pass
869 - 894	125	1000	Pass

Uplink Restart Time Test Results

Frequency Band (MHz)	Measured Time (S)	Limit (S)	Result
698 - 716	No restart	≥60	Pass
776 - 787	No restart	≥60	Pass
824 - 849	No restart	≥60	Pass

Downlink Restart Time Test Results

Frequency Band (MHz)	Measured Time (S)	Limit (S)	Result
728 - 746	No restart	≥60	Pass
746 - 757	No restart	≥60	Pass
869 - 894	No restart	≥60	Pass

Uplink Restart Count Test Results

Frequency Band (MHz)	Restarts	Limit	Result
698 - 716	0	≤5	Pass
776 - 787	0	≤5	Pass
824 - 849	0	≤5	Pass

Downlink Restart Count Test Results

Frequency Band (MHz)	Restarts	Limit	Result
728 - 746	0	≤5	Pass
746 - 757	0	≤5	Pass
869 - 894	0	≤5	Pass

Annex I Oscillation Detection

Refer to Annex I for Oscillation Detection Plots

Oscillation Mitigation
Engineer: Poona Saber
Test Date: 5/16/19

Test Procedure

The EUT was connected as shown per KDB 935210 D03. The EUT was verified to shut down in the presence of an oscillation.
The total attenuation from output to input was set +5 dB higher than the gain for the band being tested.
For EUT's that do not shutdown, the peak oscillation was measured and the variable attenuator was reduced in 1 dB increments until the booster shuts off.
The frequency and amplitude of the highest oscillation and the lowest level in the valley next to the oscillation was recorded for each 1 dB step as required per the KDB.
For oscillations that exceeded the 12 dB limit, the time required for the booster to mitigate the oscillation to less than 12 dB was recorded.
If the booster mitigated the oscillation within the 300 second time limit, the time required to mitigate the oscillation was recorded along with the final level of the oscillation after mitigation.

Note: In all cases the booster mitigated the oscillation to less than 12 dB before the 300 second limit.

Test Setup

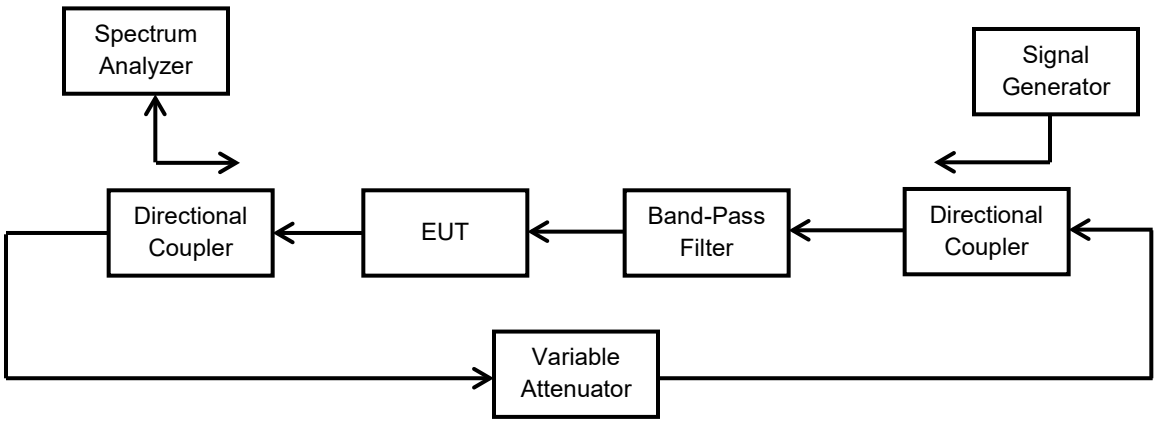

Dedicated Ports

Uplink Oscillation Mitigation Test Data

Oscillation Mitigation - Uplink									
Band	698 – 716 MHz								
Test Signal Type	CDMA								
Variable Attenuator Setting	Oscillations and Power Levels				Margin	Limit	Time to Mitigate Oscillation	Mitigation Time Limit	Pass / Fail
	Freq.	Level	Freq.	Level					
dB	MHz	dBm	MHz	dBm	dB	dB	sec	sec	
+5	709.33	-64.18	711.64	-73.2	9.02	<12	N/A	< 300	Pass
+4	709.33	-63.64	711.64	-75.11	11.47	<12	28	< 300	Pass
+3	709.33	-65.53	711.64	-75.45	9.92	<12	N/A	< 300	Pass
+2	709.33	-64.12	711.64	-76.77	12.65	<12	85	< 300	Pass
+1	709.33	-67.16	711.64	-77.89	10.73	<12	N/A	< 300	Pass
+0	709.33	-67.16	711.64	-77.71	10.55	<12	N/A	< 300	Pass
-1	709.33	-65.03	711.64	-78.44	13.41	<12	34	< 300	Pass
-2	709.33	-71.79	711.64	-80.72	8.93	<12	N/A	< 300	Pass
-3	709.33	-70.74	711.64	-81.34	10.6	<12	N/A	< 300	Pass
-4	709.33	-68.97	711.64	-81.86	12.89	<12	50	< 300	Pass
-5	709.33	-74.14	711.64	-83.43	9.29	<12	N/A	< 300	Pass

Oscillation Mitigation - Uplink									
Band	776 – 787 MHz								
Test Signal Type	CDMA								
Variable Attenuator Setting	Oscillations and Power Levels				Margin	Limit	Time to Mitigate Oscillation	Mitigation Time Limit	Pass / Fail
	Freq.	Level	Freq.	Level					
dB	MHz	dBm	MHz	dBm	dB	dB	sec	sec	
+5	778.33	-62.66	779.8	-72.1	9.44	<12	100	< 300	Pass
+4	778.33	-60.4	779.8	-72.3	11.9	<12	N/A	< 300	Pass
+3	778.33	-63.85	779.8	-73.8	9.95	<12	N/A	< 300	Pass
+2	778.33	-62.62	779.8	-75.5	12.88	<12	70	< 300	Pass
+1	778.33	-68.78	779.8	-76.9	8.12	<12	N/A	< 300	Pass
+0	778.33	-68.06	779.8	-77.34	9.28	<12	N/A	< 300	Pass
-1	778.33	-66.4	779.8	-77.6	11.2	<12	N/A	< 300	Pass
-2	778.33	-70.87	779.8	-79.3	8.43	<12	N/A	< 300	Pass
-3	778.33	-69.99	779.8	-79.89	9.9	<12	N/A	< 300	Pass
-4	778.33	-73.13	779.8	-81.25	8.12	<12	N/A	< 300	Pass
-5	778.33	-71.81	779.8	-81.34	9.53	<12	N/A	< 300	Pass

Oscillation Mitigation - Uplink									
Band	824 - 849 MHz								
Test Signal Type	CDMA								
Variable Attenuator Setting	Oscillations and Power Levels				Margin	Limit	Time to Mitigate Oscillation	Mitigation Time Limit	Pass / Fail
	Freq.	Level	Freq.	Level					
dB	MHz	dBm	MHz	dBm	dB	dB	sec	sec	
+5	834.16	-60.49	836.75	-70.65	10.16	<12	N/A	< 300	Pass
+4	834.16	-58.65	836.75	-71.17	12.52	<12	123	< 300	Pass
+3	834.16	-61.66	836.75	-72.2	10.54	<12	N/A	< 300	Pass
+2	834.16	-59.07	836.75	-72.51	13.44	<12	75	< 300	Pass
+1	834.16	-65.96	836.75	-75.11	9.15	<12	N/A	< 300	Pass
+0	834.16	-64.45	836.75	-75.17	10.72	<12	N/A	< 300	Pass
-1	834.16	-63.33	836.75	-76.2	12.87	<12	79	< 300	Pass
-2	834.16	-68.48	836.75	-78.13	9.65	<12	N/A	< 300	Pass
-3	834.16	-67.68	836.75	-78.64	10.96	<12	N/A	< 300	Pass
-4	834.16	-66.13	836.75	-78.84	12.71	<12	57	< 300	Pass
-5	834.16	-69.16	836.75	-80.56	11.4	<12	N/A	< 300	Pass

Oscillation Mitigation - Uplink									
Band	1710 - 1755 MHz								
Test Signal Type	CDMA								
Variable Attenuator Setting	Oscillations and Power Levels				Margin	Limit	Time to Mitigate Oscillation	Mitigation Time Limit	Pass / Fail
	Freq.	Level	Freq.	Level					
dB	MHz	dBm	MHz	dBm	dB	dB	sec	sec	
+5	1738.17	-53.43	1743.8	-65.66	12.23	<12	48	< 300	Pass
+4	1738.17	-56.95	1743.8	-67.59	10.64	<12	N/A	< 300	Pass
+3	1738.17	-55.9	1743.8	-68.18	12.28	<12	83	< 300	Pass
+2	1738.17	-59.23	1743.8	-69.74	10.51	<12	N/A	< 300	Pass
+1	1738.17	-56.79	1743.8	-69.41	12.62	<12	103	< 300	Pass
+0	1738.17	-60.38	1743.8	-71.8	11.42	<12	N/A	< 300	Pass
-1	1738.17	-58.7	1743.8	-71.78	13.08	<12	105	< 300	Pass
-2	1738.17	-63.16	1743.8	-73.75	10.59	<12	N/A	< 300	Pass
-3	1738.17	-60.68	1743.8	-73.92	13.24	<12	120	< 300	Pass
-4	1738.17	-63.77	1743.8	-75.6	11.83	<12	N/A	< 300	Pass
-5	1738.17	-62.68	1743.8	-75.87	13.19	<12	107	< 300	Pass

Oscillation Mitigation - Uplink									
Band	1850 - 1915 MHz								
Test Signal Type	CDMA								
Variable Attenuator Setting	Oscillations and Power Levels				Margin	Limit	Time to Mitigate Oscillation	Mitigation Time Limit	Pass / Fail
	Freq.	Level	Freq.	Level					
dB	MHz	dBm	MHz	dBm	dB	dB	sec	sec	
+5	1866.5	-50.73	1871.7	-64.7	13.97	<12	30	< 300	Pass
+4	1866.5	-54.82	1871.7	-66.54	11.72	<12	N/A	< 300	Pass
+3	1866.5	-53.53	1871.7	-67.3	13.77	<12	110	< 300	Pass
+2	1866.5	-59.52	1871.7	-69.87	10.35	<12	N/A	< 300	Pass
+1	1866.5	-57.8	1871.7	-69.86	12.06	<12	105	< 300	Pass
+0	1866.5	-62.54	1871.7	-72.36	9.82	<12	N/A	< 300	Pass
-1	1866.5	-62.15	1871.7	-72.39	10.24	<12	N/A	< 300	Pass
-2	1866.5	-60.87	1871.7	-73	12.13	<12	78	< 300	Pass
-3	1866.5	-62.92	1871.7	-74.23	11.31	<12	N/A	< 300	Pass
-4	1866.5	-61.36	1871.7	-74.73	13.37	<12	110	< 300	Pass
-5	1866.5	-65.09	1871.7	-76.17	11.08	<12	N/A	< 300	Pass

Downlink Oscillation Mitigation Test Data

Oscillation Mitigation - Downlink									
Band	728 - 746 MHz								
Test Signal Type	CDMA								
Variable Attenuator Setting	Oscillations and Power Levels				Margin	Limit	Time to Mitigate Oscillation	Mitigation Time Limit	Pass / Fail
	Freq.	Level	Freq.	Level					
dB	MHz	dBm	MHz	dBm	dB	dB	sec	sec	
+5	745.35	-63.74	742.9	-73.57	9.83	<12	N/A	< 300	Pass
+4	745.35	-61.38	742.9	-73	11.62	<12	N/A	< 300	Pass
+3	745.35	-62.76	742.9	-75	12.24	<12	10	< 300	Pass
+2	745.35	-65.65	742.9	-75.43	9.78	<12	N/A	< 300	Pass
+1	745.35	-63.5	742.9	-75.98	12.48	<12	138	< 300	Pass
+0	745.35	-67.26	742.9	-77.32	10.06	<12	N/A	< 300	Pass
-1	745.35	-65.05	742.9	-77.49	12.44	<12	150	< 300	Pass
-2	745.35	-70.64	742.9	-79.54	8.9	<12	N/A	< 300	Pass
-3	745.35	-68.72	742.9	-80.32	11.6	<12	N/A	< 300	Pass
-4	745.35	-67.2	742.9	-80.54	13.34	<12	105	< 300	Pass
-5	745.35	-74.07	742.9	-83.49	9.42	<12	N/A	< 300	Pass

Oscillation Mitigation - Downlink									
Band	746 - 757 MHz								
Test Signal Type	CDMA								
Variable Attenuator Setting	Oscillations and Power Levels				Margin	Limit	Time to Mitigate Oscillation	Mitigation Time Limit	Pass / Fail
	Freq.	Level	Freq.	Level					
dB	MHz	dBm	MHz	dBm	dB	dB	sec	sec	
+5	747.39	-63.98	749.97	-75.43	11.45	<12	N/A	< 300	Pass
+4	747.39	-62.7	749.97	-75.43	12.73	<12	119	< 300	Pass
+3	747.39	-64.63	749.97	-76.45	11.82	<12	N/A	< 300	Pass
+2	747.39	-63.09	749.97	-77.04	13.95	<12	107	< 300	Pass
+1	747.39	-66.64	749.97	-78.51	11.87	<12	N/A	< 300	Pass
+0	747.39	-65.34	749.97	-78.82	13.48	<12	118	< 300	Pass
-1	747.39	-70.04	749.97	-80.64	10.6	<12	N/A	< 300	Pass
-2	747.39	-69.17	749.97	-80.89	11.72	<12	N/A	< 300	Pass
-3	747.39	-66.91	749.97	-81.35	14.44	<12	96	< 300	Pass
-4	747.39	-73.39	749.97	-82.78	9.39	<12	N/A	< 300	Pass
-5	747.39	-72.15	749.97	-82.96	10.81	<12	N/A	< 300	Pass

Oscillation Mitigation – Downlink									
Band	869 - 894 MHz								
Test Signal Type	CDMA								
Variable Attenuator Setting	Oscillations and Power Levels				Margin	Limit	Time to Mitigate Oscillation	Mitigation Time Limit	Pass / Fail
	Freq.	Level	Freq.	Level					
dB	MHz	dBm	MHz	dBm	dB	dB	sec	sec	
+5	877.08	-63.63	879.01	-71.56	7.93	<12	N/A	< 300	Pass
+4	877.08	-63.43	879.01	-73.23	9.8	<12	N/A	< 300	Pass
+3	877.08	-62.4	879.01	-73.1	10.7	<12	N/A	< 300	Pass
+2	877.08	-58.08	879.01	-72.3	14.22	<12	80	< 300	Pass
+1	877.08	-65.88	879.01	-75	9.12	<12	N/A	< 300	Pass
+0	877.08	-64	879.01	-75.15	11.15	<12	N/A	< 300	Pass
-1	877.08	-62.66	879.01	-76.11	13.45	<12	130	< 300	Pass
-2	877.08	-69.31	879.01	-77.65	8.34	<12	N/A	< 300	Pass
-3	877.08	-67.23	879.01	-78.32	11.09	<12	N/A	< 300	Pass
-4	877.08	-65.18	879.01	-79.14	13.96	<12	116	< 300	Pass
-5	877.08	-71.68	879.01	-80.7	9.02	<12	N/A	< 300	Pass

Oscillation Mitigation - Downlink									
Band	1930 - 1995 MHz								
Test Signal Type	CDMA								
Variable Attenuator Setting	Oscillations and Power Levels				Margin	Limit	Time to Mitigate Oscillation	Mitigation Time Limit	Pass / Fail
	Freq.	Level	Freq.	Level					
dB	MHz	dBm	MHz	dBm	dB	dB	sec	sec	
+5	1966.8	-52.43	1972	-65.74	13.31	<12	20	< 300	Pass
+4	1966.8	-54.5	1972	-64.7	10.2	<12	N/A	< 300	Pass
+3	1966.8	-53	1972	-64.76	11.76	<12	N/A	< 300	Pass
+2	1966.8	-51.48	1972	-65.37	13.89	<12	62	< 300	Pass
+1	1966.8	-50.16	1972	-66	15.84	<12	131	< 300	Pass
+0	1966.8	-61	1972	-69.7	8.7	<12	N/A	< 300	Pass
-1	1966.8	-59.93	1972	-69.81	9.88	<12	N/A	< 300	Pass
-2	1966.8	-58.78	1972	-70.37	11.59	<12	N/A	< 300	Pass
-3	1966.8	-57.88	1972	-70.76	12.88	<12	38	< 300	Pass
-4	1966.8	-63.02	1972	-72.51	9.49	<12	N/A	< 300	Pass
-5	1966.8	-62.4	1972	-73.35	10.95	<12	N/A	< 300	Pass

Oscillation Mitigation - Downlink									
Band	2110 - 2155 MHz								
Test Signal Type	CDMA								
Variable Attenuator Setting	Oscillations and Power Levels				Margin	Limit	Time to Mitigate Oscillation	Mitigation Time Limit	Pass / Fail
	Freq.	Level	Freq.	Level					
dB	MHz	dBm	MHz	dBm	dB	dB	sec	sec	
+5	2155.8	-53.75	2160.97	-65.54	11.79	<12	N/A	< 300	Pass
+4	2155.8	-54.55	2160.97	-65.34	10.79	<12	N/A	< 300	Pass
+3	2155.8	-55.97	2160.97	-68.16	12.19	<12	10	< 300	Pass
+2	2155.8	-58.29	2160.97	-68.85	10.56	<12	N/A	< 300	Pass
+1	2155.8	-57.43	2160.97	-68.69	11.26	<12	N/A	< 300	Pass
+0	2155.8	-55.95	2160.97	-69.85	13.9	<12	67	< 300	Pass
-1	2155.8	-61.39	2160.97	-71.4	10.01	<12	N/A	< 300	Pass
-2	2155.8	-60.06	2160.97	-71.7	11.64	<12	N/A	< 300	Pass
-3	2155.8	-57.75	2160.97	-72.13	14.38	<12	99	< 300	Pass
-4	2155.8	-66.8	2160.97	-75.1	8.3	<12	N/A	< 300	Pass
-5	2155.8	-65.21	2160.97	-75.81	10.6	<12	N/A	< 300	Pass

Common Ports

Uplink Oscillation Mitigation Test Data

Oscillation Mitigation - Uplink									
Band	698 – 716 MHz								
Test Signal Type	CDMA								
Variable Attenuator Setting	Oscillations and Power Levels				Margin	Limit	Time to Mitigate Oscillation	Mitigation Time Limit	Pass / Fail
	Freq.	Level	Freq.	Level					
dB	MHz	dBm	MHz	dBm	dB	dB	sec	sec	
+5	709.14	-65.59	711.51	-74.7	9.11	<12	N/A	< 300	Pass
+4	709.14	-64.2	711.51	-75	10.8	<12	N/A	< 300	Pass
+3	709.14	-63.06	711.51	-75.12	12.06	<12	280	< 300	Pass
+2	709.14	-67.49	711.51	-77.84	10.35	<12	N/A	< 300	Pass
+1	709.14	-66.32	711.51	-78	11.68	<12	N/A	< 300	Pass
+0	709.14	-64.67	711.51	-78	13.33	<12	71	< 300	Pass
-1	709.14	-71.65	711.51	-80.38	8.73	<12	N/A	< 300	Pass
-2	709.14	-70.65	711.51	-80.86	10.21	<12	N/A	< 300	Pass
-3	709.14	-69.33	711.51	-81.25	11.92	<12	N/A	< 300	Pass
-4	709.14	-67.49	711.51	-81.23	13.74	<12	29	< 300	Pass
-5	709.14	-74.13	711.51	-83.35	9.22	<12	N/A	< 300	Pass

Oscillation Mitigation - Uplink									
Band	776 – 787 MHz								
Test Signal Type	CDMA								
Variable Attenuator Setting	Oscillations and Power Levels				Margin	Limit	Time to Mitigate Oscillation	Mitigation Time Limit	Pass / Fail
	Freq.	Level	Freq.	Level					
dB	MHz	dBm	MHz	dBm	dB	dB	sec	sec	
+5	779.63	-63.06	781.26	-73.18	10.12	<12	N/A	< 300	Pass
+4	779.63	-62.22	781.26	-74.14	11.92	<12	30	< 300	Pass
+3	779.63	-65.25	781.26	-75.5	10.25	<12	N/A	< 300	Pass
+2	779.63	-63.94	781.26	-77.13	13.19	<12	30	< 300	Pass
+1	779.63	-67.14	781.26	-77.23	10.09	<12	N/A	< 300	Pass
+0	779.63	-66.49	781.26	-77.65	11.16	<12	N/A	< 300	Pass
-1	779.63	-64.77	781.26	-78.34	13.57	<12	78	< 300	Pass
-2	779.63	-69.17	781.26	-79.8	10.63	<12	N/A	< 300	Pass
-3	779.63	-68.21	781.26	-80.1	11.89	<12	N/A	< 300	Pass
-4	779.63	-70.84	781.26	-81.81	10.97	<12	N/A	< 300	Pass
-5	779.63	-69.97	781.26	-82.32	12.35	<12	90	< 300	Pass

Oscillation Mitigation - Uplink									
Band	824 - 849 MHz								
Test Signal Type	CDMA								
Variable Attenuator Setting	Oscillations and Power Levels				Margin	Limit	Time to Mitigate Oscillation	Mitigation Time Limit	Pass / Fail
	Freq.	Level	Freq.	Level					
dB	MHz	dBm	MHz	dBm	dB	dB	sec	sec	
+5	837	-63.59	839	-72.1	8.51	<12	N/A	< 300	Pass
+4	837	-61.93	839	-72.2	10.27	<12	N/A	< 300	Pass
+3	837	-62.43	839	-73	10.57	<12	N/A	< 300	Pass
+2	837	-63.22	839	-73.8	10.58	<12	N/A	< 300	Pass
+1	837	-61.41	839	-74.25	12.84	<12	106	< 300	Pass
+0	837	-66.02	839	-76.01	9.99	<12	N/A	< 300	Pass
-1	837	-63.84	839	-76.26	12.42	<12	135	< 300	Pass
-2	837	-67.92	839	-78.01	10.09	<12	N/A	< 300	Pass
-3	837	-66.51	839	-78.15	11.64	<12	N/A	< 300	Pass
-4	837	-64.6	839	-78.5	13.9	<12	57	< 300	Pass
-5	837	-70.72	839	-81	10.28	<12	N/A	< 300	Pass

Oscillation Mitigation - Downlink									
Band	728 - 746 MHz								
Test Signal Type	CDMA								
Variable Attenuator Setting	Oscillations and Power Levels				Margin	Limit	Time to Mitigate Oscillation	Mitigation Time Limit	Pass / Fail
	Freq.	Level	Freq.	Level					
dB	MHz	dBm	MHz	dBm	dB	dB	sec	sec	
+5	744	-59.58	746.2	-73.1	13.52	<12	50	< 300	Pass
+4	744	-64.57	746.2	-75.7	11.13	<12	N/A	< 300	Pass
+3	744	-63	746.2	-75.6	12.6	<12	117	< 300	Pass
+2	744	-67.46	746.2	-77.1	9.64	<12	N/A	< 300	Pass
+1	744	-65.56	746.2	-77.2	11.64	<12	N/A	< 300	Pass
+0	744	-63.52	746.2	-78.13	14.61	<12	107	< 300	Pass
-1	744	-70	746.2	-79.8	9.8	<12	N/A	< 300	Pass
-2	744	-68.57	746.2	-80.23	11.66	<12	134	< 300	Pass
-3	744	-71.46	746.2	-81.97	10.51	<12	N/A	< 300	Pass
-4	744	-70.38	746.2	-82.76	12.38	<12	150	< 300	Pass
-5	744	-74.24	746.2	-83.54	9.3	<12	N/A	< 300	Pass

Oscillation Mitigation - Downlink									
Band	746 - 757 MHz								
Test Signal Type	CDMA								
Variable Attenuator Setting	Oscillations and Power Levels				Margin	Limit	Time to Mitigate Oscillation	Mitigation Time Limit	Pass / Fail
	Freq.	Level	Freq.	Level					
dB	MHz	dBm	MHz	dBm	dB	dB	sec	sec	
+5	746.33	-64.68	748.6	-74.2	9.52	<12	N/A	< 300	Pass
+4	746.33	-62.53	748.6	-74.46	11.93	<12	N/A	< 300	Pass
+3	746.33	-62.58	748.6	-76.35	13.77	<12	30	< 300	Pass
+2	746.33	-67.1	748.6	-76.79	9.69	<12	N/A	< 300	Pass
+1	746.33	-64.32	748.6	-77.1	12.78	<12	118	< 300	Pass
+0	746.33	-67.87	748.6	-78.74	10.87	<12	N/A	< 300	Pass
-1	746.33	-66.64	748.6	-78.76	12.12	<12	124	< 300	Pass
-2	746.33	-69.3	748.6	-80.18	10.88	<12	N/A	< 300	Pass
-3	746.33	-67.95	748.6	-80.56	12.61	<12	129	< 300	Pass
-4	746.33	-71.88	748.6	-81.98	10.1	<12	N/A	< 300	Pass
-5	746.33	-69.59	748.6	-82.51	12.92	<12	134	< 300	Pass

Oscillation Mitigation – Downlink									
Band	869 - 894 MHz								
Test Signal Type	CDMA								
Variable Attenuator Setting	Oscillations and Power Levels				Margin	Limit	Time to Mitigate Oscillation	Mitigation Time Limit	Pass / Fail
	Freq.	Level	Freq.	Level					
dB	MHz	dBm	MHz	dBm	dB	dB	sec	sec	
+5	879.2	-62.72	881.3	-72.84	10.12	<12	50	< 300	Pass
+4	879.2	-62.41	881.3	-73.23	10.82	<12	N/A	< 300	Pass
+3	879.2	-61.6	881.3	-73.79	12.19	<12	75	< 300	Pass
+2	879.2	-65.41	881.3	-75.98	10.57	<12	N/A	< 300	Pass
+1	879.2	-64.49	881.3	-75.18	10.69	<12	N/A	< 300	Pass
+0	879.2	-62.6	881.3	-76.15	13.55	<12	70	< 300	Pass
-1	879.2	-68.35	881.3	-78.36	10.01	<12	N/A	< 300	Pass
-2	879.2	-67.06	881.3	-78.73	11.67	<12	N/A	< 300	Pass
-3	879.2	-65.53	881.3	-78.86	13.33	<12	74	< 300	Pass
-4	879.2	-70.78	881.3	-80.68	9.9	<12	N/A	< 300	Pass
-5	879.2	-69.3	881.3	-81.46	12.16	<12	109	< 300	Pass

Radiated Spurious
Engineer: Poona Saber
Test Date: 5/17/19-5/22/19

Test Procedure

The EUT was tested in a semi-anechoic chamber with the turntable set 3m from the receiving antenna. A spectrum analyzer was used to verify that the EUT met the requirements for Radiated Emissions. The EUT was tested by rotating it 360 degrees with the antenna in both the vertical and horizontal orientation while raised from 1 to 4 meters to ensure that the signal levels were maximized. All cable and antenna correction factors were input into the spectrum analyzer ensuring an accurate measurement in ERP/EIRP with the resultant power in dBm. A signal generator was used to provide a CW signal centered in each operational uplink and downlink band. The EUT output was terminated into a 50 Ohm non-radiating load.

The following formula was used for calculating the limits:

Radiated Spurious Emissions Limit = P1 – (43+ 10Log(P2)) = -13dBm
P1 = power in dBm
P2 = power in Watts

Test Setup

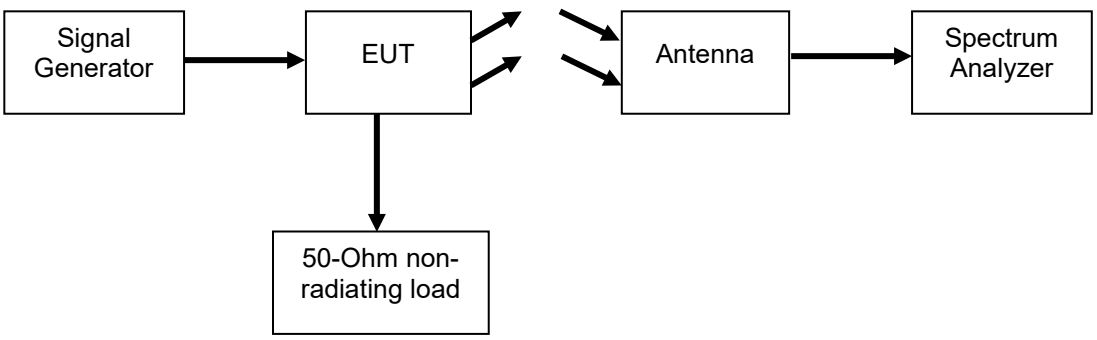

Annex J Radiated Spurious Emission

Refer to Annex J for Radiated Spurious Emission plots

No spurious emissions above the system noise floor were observed.
All emissions were lower than -13 dBm.

Conducted Spurious Emissions with Modem Transmitting
Engineer: Poona Saber
Test Date: 5/17/19

Test Procedure

The EUT was connected to a spectrum analyzer through an attenuator, with the losses being input into the spectrum analyzer as a combination of reference level offset and correction factor as needed to ensure accurate readings. A signal generator was utilized to produce a 4.1 MHz AWGN signal operating at the maximum allowable power.

The internal cellular modem was powered on and transmitting at maximum power in the uplink direction at the frequency listed in the table.
Note: the cellular modem only transmits ion the uplink direction, so no downlink tests are impacted by the cellular modem transmitting.

The conducted spurious emissions from 9 kHz to 10 times the highest tunable frequency for each operational band were measured (excluding the band defined by the Out of band emissions test). The emissions were plotted and the highest level was recorded in the summary table.

The following formulas are used for calculating the limits.

Conducted Spurious Emissions Limit = P1 – (43+ 10Log(P2)) = -13 dBm
P1 = power in dBm
P2 = power in Watts

Test Setup

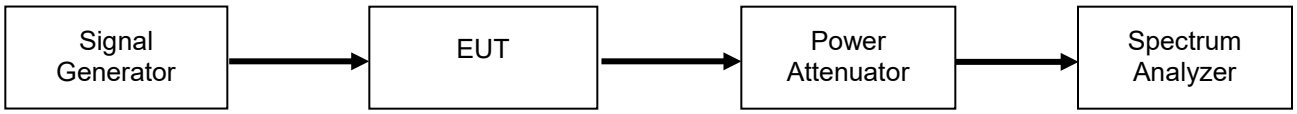

Annex K Conducted Spurious Emission with Cellular Modem Transmitting

Refer to Annex K for Conducted Spurious Emission plots with the cellular modem transmitting

Intermodulation with Modem Transmitting
Engineer: Poona Saber
Test Date: 5/10/19

Test Procedure

2 tests were performed for 3-tone intermodulation.
The first test was performed using 3 CW signals combined at the EUT input.
The internal modem was powered on but not transmitting.
The CW signals were spaced 600 kHz apart and centered at the peak of the operational band.
Attenuator, combiner, and cable insertion loss correction factors were input to either the signal generator or the spectrum analyzer as required to ensure that accurate measurements were recorded.
The input power was increased until the AGC level was reached. The input power was then set to 0.2 dB below the AGC level and intermodulation products were measured to ensure they were less than -19 dBm in a 3 kHz RBW.
The spectrum analyzer screenshot was captured and the highest-level intermodulation signal was recorded in the test summary table.
The input power was increased in 2 dB increments to 10 dB above the AGC threshold to verify the intermodulation products remain below the limit. During this test, the input power was not increased past the maximum allowed.
The intermodulation level with the input power 10 dB higher than the AGC threshold was recorded in the test summary table.

For the 2nd test, a two-tone test with the modem transmitting was performed. The 2 CW signals were centered at the peak of the passband.
The modem was tuned to a channel near the CW signals without masking the intermodulation signals.
Before setting the modem to transmit mode, a screen capture of the 2-tone intermodulation products was recorded with the input power set to 0.2 dB below the AGC threshold.
The modem was then set to transmit mode at the maximum power level and the intermodulation products were recorded along with the spectrum analyzer screen capture.
With the modem signal present, the output level of the 2 CW signals and associated intermodulation products was reduced.
The input power was increased in 2 dB increments to 10 dB above the AGC threshold to verify the intermodulation products remain below the limit. During this test, the input power was not increased past the maximum allowed.
The intermodulation level with the input power 10 dB higher than the AGC threshold was recorded in the test summary table.
At no time during the test, did the intermodulation products exceed the -19 dBm limit.
For all tests an Average detector was used and the RBW was set to 3 kHz.

3 Tone Intermodulation Test Setup

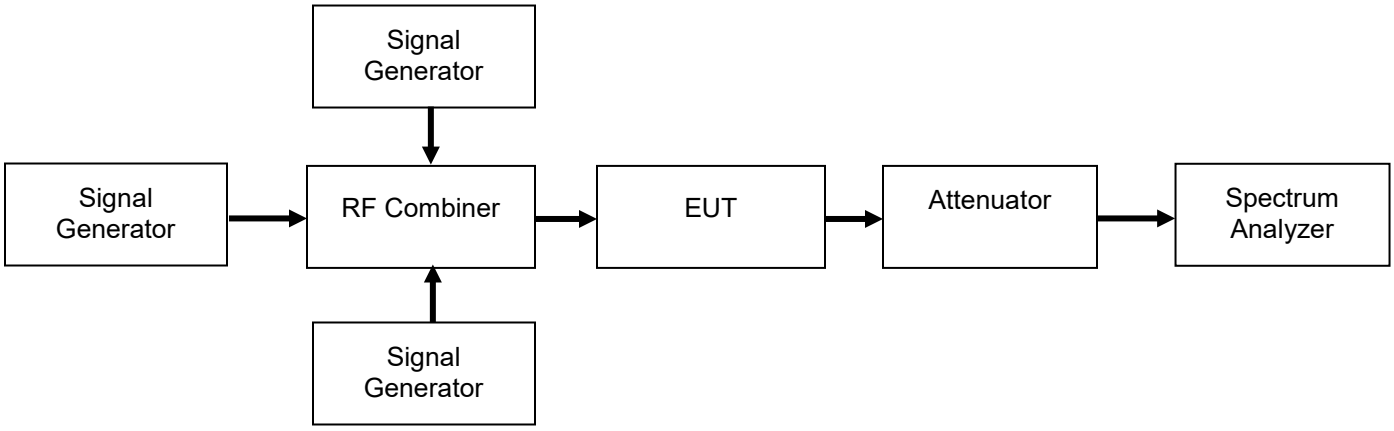

Dedicated Ports

Intermodulation Test Results with 3 CW signals

Uplink Band (MHz)	1st Tone (MHz)	2nd Tone (MHz)	3rd Tone (MHz)	Intermodulation Level (dBm)	Limit (dBm)	Result (Pass / Fail)	Intermod Level with Input Power @ AGC + 10 dB	Result (Pass / Fail)
698 - 716	710.5	710.8	711.1	-21.73	-19	Pass	-22.82	Pass
776 – 787	778.58	778.88	779.18	-24.8	-19	Pass	-21.97	Pass
824 – 849	833.86	834.16	834.46	-30.77	-19	Pass	-31.64	Pass
1710 – 1755	1736.4	1736.7	1737	-21.66	-19	Pass	-24.82	Pass
1850 – 1915	1865.27	1865.57	1865.87	-19.22	-19	Pass	-23.45	Pass

Intermodulation Test Results with 2 CW signals and Modem Transmitting

Uplink Band (MHz)	1st Tone (MHz)	2nd Tone (MHz)	Modem Frequency (MHz)	Intermodulation Level (dBm)	Limit (dBm)	Result (Pass / Fail)	Intermod Level with Input Power @ AGC + 10 dB	Result (Pass / Fail)
698 - 716	710.5	711.1	704	-39.23	-19	Pass	-24.26	Pass
776 – 787	778.58	779.18	784	-42.69	-19	Pass	-29.83	Pass
824 – 849	833.86	834.46	828	-48.69	-19	Pass	-29.08	Pass
1710 – 1755	1736.4	1737	1730	-49.33	-19	Pass	-30.13	Pass
1850 – 1915	1865.27	1865.87	1871	-26.04	-19	Pass	-30.12	Pass

Common Ports

Intermodulation Test Results with 3 CW signals

Uplink Band (MHz)	1st Tone (MHz)	2nd Tone (MHz)	3rd Tone (MHz)	Intermodulation Level (dBm)	Limit (dBm)	Result (Pass / Fail)	Intermod Level with Input Power @ AGC + 10 dB	Result (Pass / Fail)
698 - 716	710.5	710.8	711.1	-23.21	-19	Pass	-24.13	Pass
776 – 787	778.58	778.88	779.18	-26.55	-19	Pass	-27.62	Pass
824 – 849	833.86	834.16	834.46	-31.91	-19	Pass	-30.38	Pass

Intermodulation Test Results with 2 CW signals and Modem Transmitting

Uplink Band (MHz)	1st Tone (MHz)	2nd Tone (MHz)	Modem Frequency (MHz)	Intermodulation Level (dBm)	Limit (dBm)	Result (Pass / Fail)	Intermod Level with Input Power @ AGC + 10 dB	Result (Pass / Fail)
698 - 716	710.5	711.1	704	-39.44	-19	Pass	-25.89	Pass
776 – 787	778.58	779.18	784	-43.46	-19	Pass	-31.19	Pass
824 – 849	833.86	834.46	828	-49	-19	Pass	-34.18	Pass

Annex L Intermodulation with Modem On

Refer to Annex L for Intermodulation Test plots with modem

Radiated Spurious with Modem Transmitting
Engineer: Poona Saber
Test Date: 5/22/19

Test Procedure

The EUT was tested in a semi-anechoic chamber with the turntable set 3m from the receiving antenna. A spectrum analyzer was used to verify that the EUT met the requirements for Radiated Emissions. The EUT was tested by rotating it 360 degrees with the antenna in both the vertical and horizontal orientation while raised from 1 to 4 meters to ensure that the signal levels were maximized. All cable and antenna correction factors were input into the spectrum analyzer ensuring an accurate measurement in ERP/EIRP with the resultant power in dBm. A signal generator was used to provide a CW signal centered in each operational uplink band. The EUT output was terminated into a 50 Ohm non-radiating load.

The internal cellular modem was powered on and transmitting at maximum power in the uplink direction at the frequency listed in the table.
Note: the cellular modem only transmits ion the uplink direction, so no downlink tests are impacted by the cellular modem transmitting.

The following formula was used for calculating the limits:

Radiated Spurious Emissions Limit = P1 – (43+ 10Log(P2)) = -13dBm
P1 = power in dBm
P2 = power in Watts

Test Setup

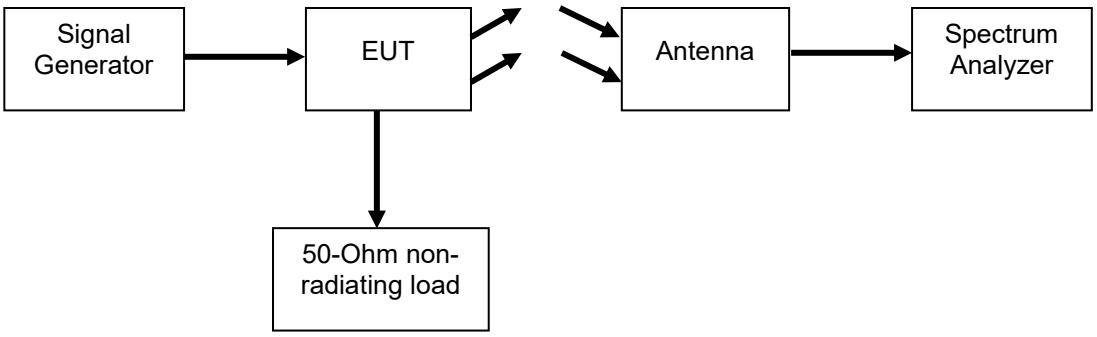

Annex M Radiated Spurious Emissions with Modem On

Refer to Annex M for Radiated Spurious Emission plots with Modem On

All emissions were lower than -13 dBm.

Isolation
Engineer: Poona Saber
Test Date: 5/23/19

The EUT was connected as shown in Test Set-up.

For the uplink with switch in position 1 (dedicated ports), a CW signal at center frequency of the uplink band was injected into server port with the input power set to just below the AGC Threshold.

The signal was measured at the wanted dedicated port output, and at the unwanted dedicated port outputs.

The difference in the amplitude of the signal at the wanted port and the signal at the unwanted ports is the isolation.

The test was repeated on the uplink with the switch set to position 2 (Common Port). The CW signal was injected into server port 1 and the wanted signal was measured at donor port 1 and the isolation was measured for donor ports 2 and 3.

For the downlink with switch in position 1 (dedicated ports), a CW signal at center frequency of the uplink band was injected into the dedicated donor port with the input power set to just below the AGC Threshold..

The wanted signal was measured at the server port 1 output. The unwanted signal was measured at the other 2 donor ports.

This test was repeated for the common port downlink path. The CW signal was injected into Donor port 1.
The wanted signal was measured at the server port 1 output. The unwanted signal was measured at the donor port 2 and donor port 3.

This test was repeated for the signal paths shown in the table below.

Signal Paths measured for the Isolation Test

Isolation_ Uplink					
Dedicated_ Switch Position 1			Common_ Switch Position 2		
Inject Signal_ Server Port			Inject Signal_ Server Port 1		
Measure Isolation			Measure Isolation		
Band	Port	Port	Band	Port	Port
B12	D1 (pink)	D2 (blue)	B12	D2 (blue)	D3 (pink)
B13	D1 (pink)	D2 (blue)	B13	D2 (blue)	D3 (pink)
B5	D1 (pink)	D3 (blue)	B5	D2 (blue)	D3 (pink)
B4	D2 (blue)	D3 (pink)			
B25	D2 (blue)	D3 (pink)			

Isolation_ Downlink					
Dedicated_ Switch Position 1			Common_ Switch Position 2		
Inject Signal_ Dedicated Donor Port			Inject Signal_ Donor Port 1		
Measure Isolation			Measure Isolation		
Band	Port	Port	Band	Port	Port
B12	D1 (pink)	D2 (blue)	B12	D2 (blue)	D3 (pink)
B13	D1 (pink)	D2 (blue)	B13	D2 (blue)	D3 (pink)
B5	D1 (blue)	D3 (pink)	B5	D2 (blue)	D3 (pink)
B4	D2 (blue)	D3 (pink)			
B25	D2 (blue)	D3 (pink)			

Test Setup

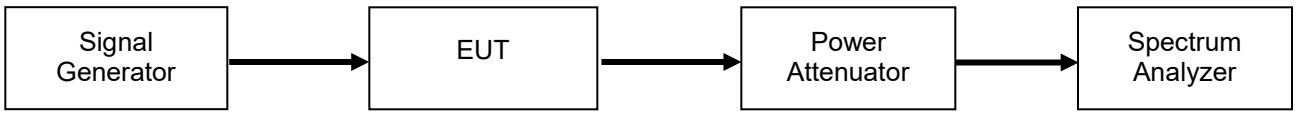

On the test data in Annex N the Traces are assigned as Color coding assigned in the tables above and The isolation was > 60 dB for all measurements

Annex N Isolation

Refer to Annex N for Isolation Test Data

Measurement Uncertainty

Measurement Uncertainty for Compliance Testing is listed in the table below.

The reported expanded uncertainty has been estimated at a 95% confidence level (k=2)

Measurement Type	Expanded Uncertainty
Conducted Emissions, AC Powerline	± 3.28 dB
Radiated Emissions_30 – 1000 MHz	± 4.82 dB
Radiated Emissions_1 – 18 GHz	± 5.73 dB
Frequency Error	± 22 Hz
Conducted RF Power	± 0.98 dB
Conducted Spurious Emission	± 2.49 dB
AC Voltage	± 2.3 %
DC Voltage	± 0.12 %
Temperature	± 1.0 deg C
Humidity	± 4.32 %

Test Equipment Utilized

Description	Manufacturer	Model #	CT Asset #	Last Cal Date	Cal Due Date
Horn Antenna	EMCO	3116	i00085	2/28/19	2/28/21
Bi-Log Antenna	Chase	CBL6111C	i00267	3/8/18	3/8/20
Horn Antenna	ARA	DRG-118/A	i00271	6/16/18	6/16/20
Humidity / Temp Meter	Newport	IBTHX-W-5	i00282	6/29/18	6/29/19
Spectrum Analyzer	Agilent	E4407B	i00331	12/4/18	12/4/19
EMI Analyzer	Agilent	E7405A	i00379	1/16/19	1/16/20
Signal Generator	Rohde & Schwarz	SMU200A	i00405	5/10/18	5/10/19**
Spectrum Analyzer	Textronix	RSA5126A	i00424	5/9/18	5/9/19**
Spectrum Analyzer	Agilent	E4445A	I00471	10/16/18	10/16/19
3 Meter Semi-Anechoic Chamber	Panashield	3 Meter Semi-Anechoic Chamber	i00428	8/15/16	8/15/19
Signal Generator	Agilent	E4438C	i00457	10/15/18	10/15/19
Preamplifier	Miteq	AMF-6F-18004000-29-8P	i00461	N/A	N/A
Voltmeter	Fluke	179	i00488	4/24/19	4/24/20
Preamplifier	Miteq	AFS44 00101 400 23-10P-44	i00509	N/A	N/A

In addition to the above listed equipment standard RF connectors and cables were utilized in the testing of the described equipment. Prior to testing these components were tested to verify proper operation.

END OF TEST REPORT