DAS System Tune up procedure

Index

1 INTRODUCTION....2
2 PREPARATION....2
2.1 PERSONAL PREPARATION....2
2.2 EQUIPMENT CONNECTION....2
2.2.1 GROUNDING CONNECTION....2
2.2.2 MU CONNECTION....3
2.2.3 MRU CONNECTION....3
2.2.4 CHECKLIST BEFORE POWERING....4
2.2.5 VERIFY NORMAL OPRATION....5
2.2.6 MAXIMUM TARGET OUTPUT POWER REQUIREMENT....6
3 WEB GUI OPERATION....7
3.1 WEB GUI CONNECTION....7
3.2 COMMISSIONING PROCEDURE....8

1 INTRODUCTION

This document is primarily written for those who are new to Comba ComFlex-6Q00 (5W) DAS system and wish to tune up the equipment.
The document is applicable to below products from Comba.

2 PREPARATION

This section will be discussing on:
1 - Preparation for those who are going to operate the equipment;
2 - How to connect to equipment for setting;
3 - LED Indicator description;

2.1 PERSONAL PREPARATION

1 - The following checklist will help to make sure relevant personnel get ready before operation.

The personnel preparation list:
a. Only trained or qualified personnel is recommended for performing tuning with equipment. Operating person should be with necessary knowledge of electronic, RF, and familiar with local regulation, rules. b. Personnel shall read through the manual/instructions/guide carefully before operation. c. Check if there is warning/alert sign on the equipment to avoid possible danger. d. Wear proper cloth. If necessary, equip with PPE (Personal Protective Equipment). e. Before operation, procedures and data recording form should be prepared.

2 - Package inspection
Visual inspect the external product package, and check internal items according to packing list. Prepare ample space and easy accessible to socket-outlet. For tools reference please find in manual.

3 - Tools preparation
Please prepare tools/cables and measuring instruments ready before hand-on. For tools recommendation, please refer to product user manual.

Handling Precautions
This covers a range of activities including lifting, lowering, pushing, pulling, carrying, moving, holding or restraining an object, animal or person. It also covers activities that require the use of force or effort, such as pulling a lever, or operating power tools.

Caution, Electrostatic Discharge (ESD)
Before removing the antistatic bag from repeater, enough caution shall be taken to avoid ESD. The Anti-static Wrist Strap is recommended.

2.2 EQUIPMENT CONNECTION

2.2.1 GROUNDING CONNECTION

The equipment must be grounded securely. Connect a copper wire to the grounding terminal on the mounting tab/enclosure, and connect the other end to a protective ground (i.e. building earth point). An internationally acceptable coloring code of the ground connection wire is green/yellow.

2.2.2 MU CONNECTION

Step1: Connect the MU OP (optical) port to one of the MRU OP port. (NOTE: requires Single Mode fiber with SC/APC connectors; MAXIMUM OPTICAL LOSS = 6.5dBo)

Step 2: For duplex application, connect the MU TX/RX port to the RF Source (BTS or BDA). For simplex application, connect the MU TX/RX port to the RF Source downlink, and then connect MU RX port with RF Source uplink. (NOTE: RF cable must be mini-DIN Male on the MU side)

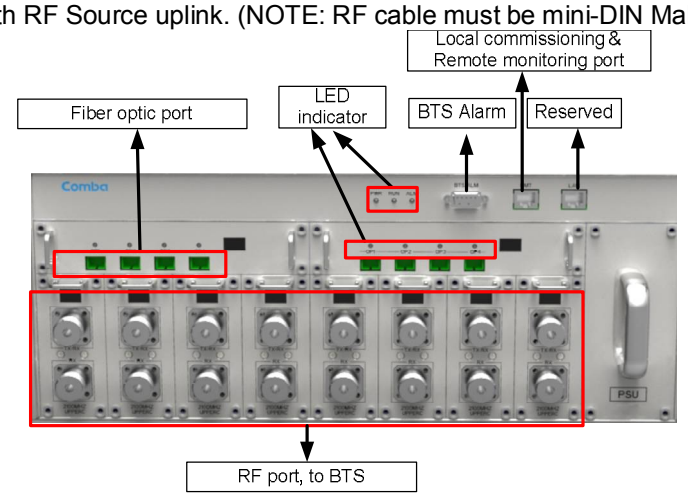

Figure 1: Fiber Optical and RF Port Connection

Step 3: Connect the power cable to the power supply port (100-240VAC, 1Amp maximum).

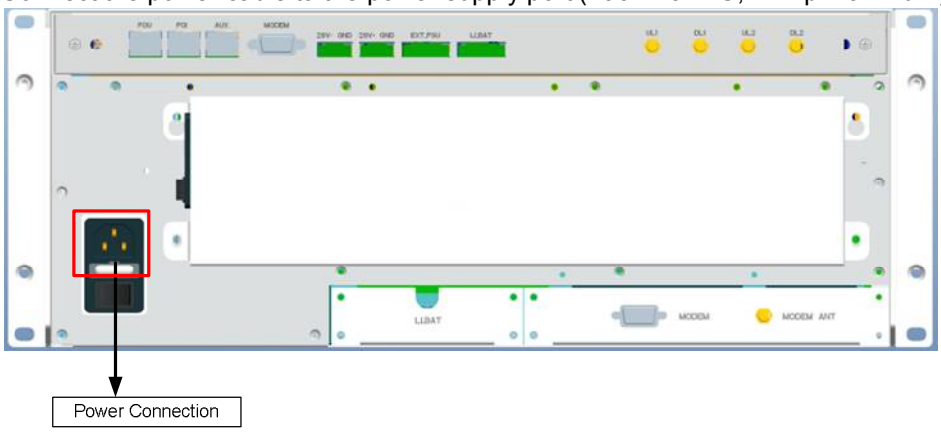

Figure 2: MU Power Connection (Rear Panel)

2.2.3 MRU CONNECTION

Step1: Connect the MRU OP (optic) port to one of the OP port located on MU front panel.

Step 2: Connect ANT port to a broadband antenna.

Step 3: Connect DC 28V port to MRU Power Supply Unit DC 28V port.

Step 4: Connect power cable on PSU with the public power grid (110~220VAC, 3Amp maximum).

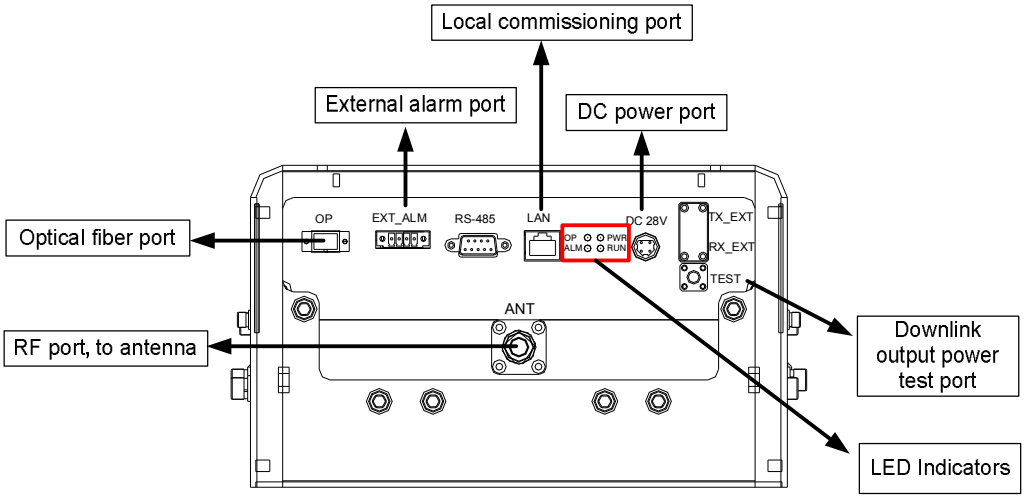

Figure 3: MRU Fiber Optical and RF Port Connection

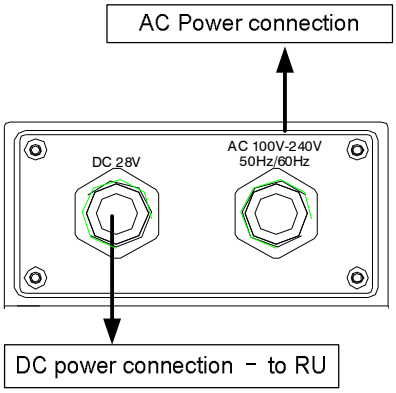

Figure 4: PSU Power Port Connection

2.2.4 CHECKLIST BEFORE POWERING

Users ***MUST*** check the following items before powering on MU and MRU.

Table 1: Check list

Item	Check List
Grounding	• Make sure MU and MRU are well grounded.
Power	• The utility voltage is within 100~240VAC. • DC cable of PSU (IDASR-PSU) is well connected with MRU.
RF connection	• RF cables are well connected.
Optical connection	• Optical cables are well connected. • The optical link between MU and MRU is normal.
VSWR	• The VSWR of antenna port must less than 1.5.

2.2.5 VERIFY NORMAL OPRATION

Verify normal operation upon powering up the equipment.

Table 2 MU LED Indications

LED Indicator	Normal Status	Indication
PWR	Steady green	Power indicator. If LED is off, it indicates the system has no power.
RUN	Flashing green (1 time/sec)	MU operation indicator. After initialization (1~2 minutes), the LED should flash at once per sec. If other flashing rate occurs, MU operates ab-normally.
ALM	off	Alarm indicator. If LED is RED, there is an alarm.
OP	Steady green	Located on Fiber Optical Unit (FOU), it is an indicator for receive optical power. If LED is off, it indicates the receiving optical power is less than -10dBm.

Table 3: MRU LED Indications

LED Indicator	Normal Sta-tus	Indication
PWR	Steady green	Power indicator. If LED is off, it indicates the system has no power.
RUN	Flashing green (1 time/sec)	MRU operation indicator. After initialization (1~2 minutes), the LED will flash once per sec. If other flashing rate occurs, MRU oper-ates abnormally.
ALM	off	Alarm indicator. If LED is RED, there is an alarm.
OP	Steady green	Located on Fiber Optical Unit (FOU), it is an indicator of Receiving optical power. If LED is off, it indicates the receiving optical power is less than -10dBm.

2.2.6 MAXIMUM TARGET OUTPUT POWER REQUIREMENT

The maximum target output power should be not exceed the output power listed on the tables below.

Table 4: Maximum Target Uplink Output Power Requirement

band	RF Frequency		Power (dBm) per Carrier per Band				Technology
			Number of RF Carriers				
	Downlink	Uplink	1 P-out	2 P-out	4 P-out	8 P-out	
600	617-652	663-698	-18	-21	-24	-27	FDD LTE
2300	2350-2360	2305-2315	-18	-21	-24	-27	FDD LTE
2500	2496-2690	2496-2690	-18	-21	-24	-27	TDD LTE

Table 5: Maximum Target Downlink Output Power Requirement

band	RF Frequency		Power (dBm) per Carrier per Band				Technology
			Number of RF Carriers				
	Downlink	Uplink	1 P-out	2 P-out	4 P-out	8 P-out	
600	617-652	663-698	38	35	32	29	FDD LTE
2300	2350-2360	2305-2315	38	35	32	29	FDD LTE
2500	2496-2690	2496-2690	38	35	32	29	TDD LTE

End of Section

3 WEB GUI OPERATION

ComFlex can be monitored and controlled by WEB GUI, follow below contents to achive system parameter setting and commissioning.

3.1 WEB GUI CONNECTION

Step 1: Connect MU OMT port to PC RJ45 port with the supplied Ethernet cable to set up a physical connection.

Step 2: Go to laptop Control Panel\Network and Internet\Local Area Connection. Right click it and click Properties. Then follow the steps shown in figure below.

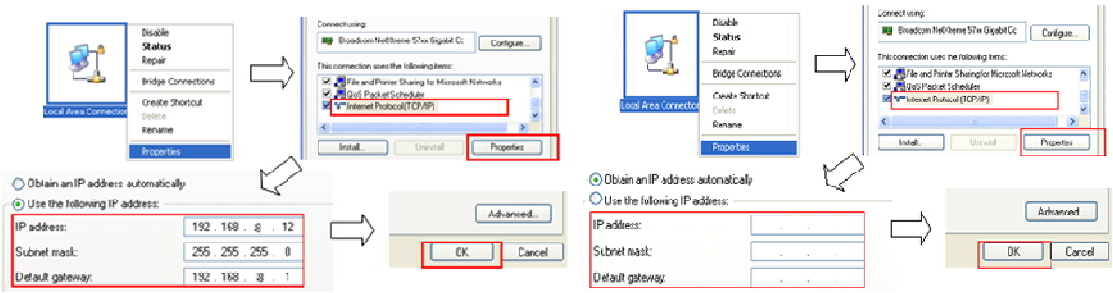

Figure 5: PC IP Address Setting

Step 3: Open browser (browser IE7.0, IE8.0, Chrome or Firefox, suggest disply resolution is 1024×768), input Web GUI **IP address: 192.168.8.101**, click [Enter].

Figure 6: Input IP Address

Step 2: Input **User Name: admin; Password** (default password: **admin**). Click [Log in].

Figure 7: Input User Name and Password

3.2 COMMISSIONING PROCEDURE

To complete the installation and commissioning, users need to follow the steps below.

Step 1: Click Menu bar [Auto Setup] on home page, a work flow will show up.

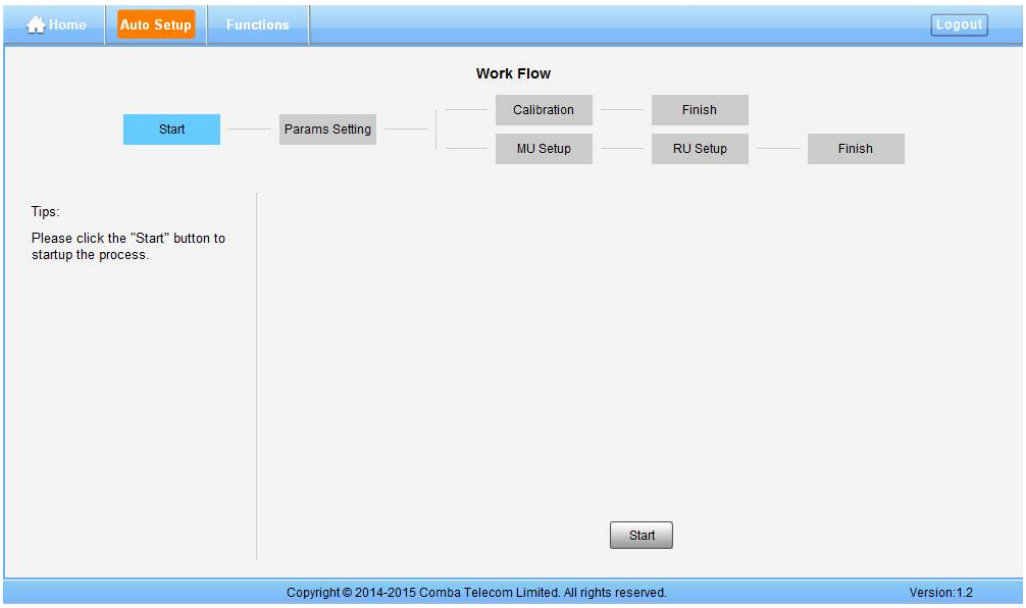

Figure 8: Commissioning Procedure - Start

Step 2: Click 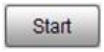

to start RU device scan, this step will take about 1 minute.

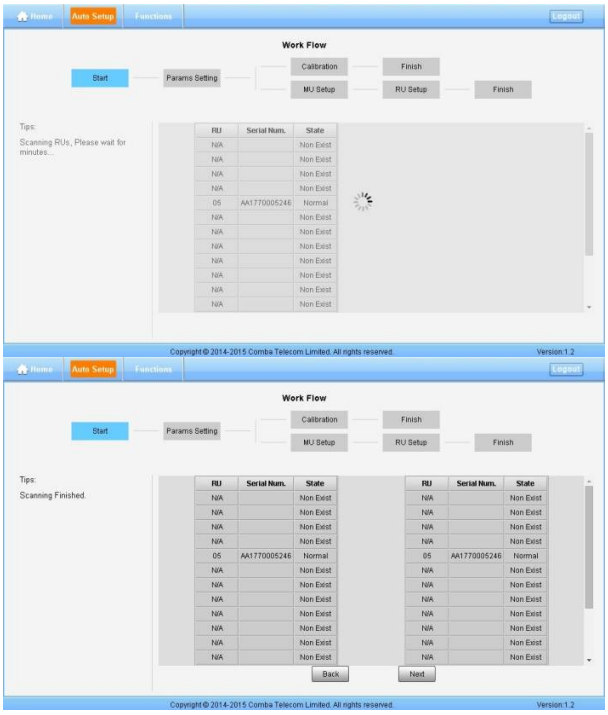

Figure 9: Commissioning Procedure - Device Scan

Step 3 Go to [Home] page, click RU, config the Working Mode of 2500 TDD to DL Normal Open.

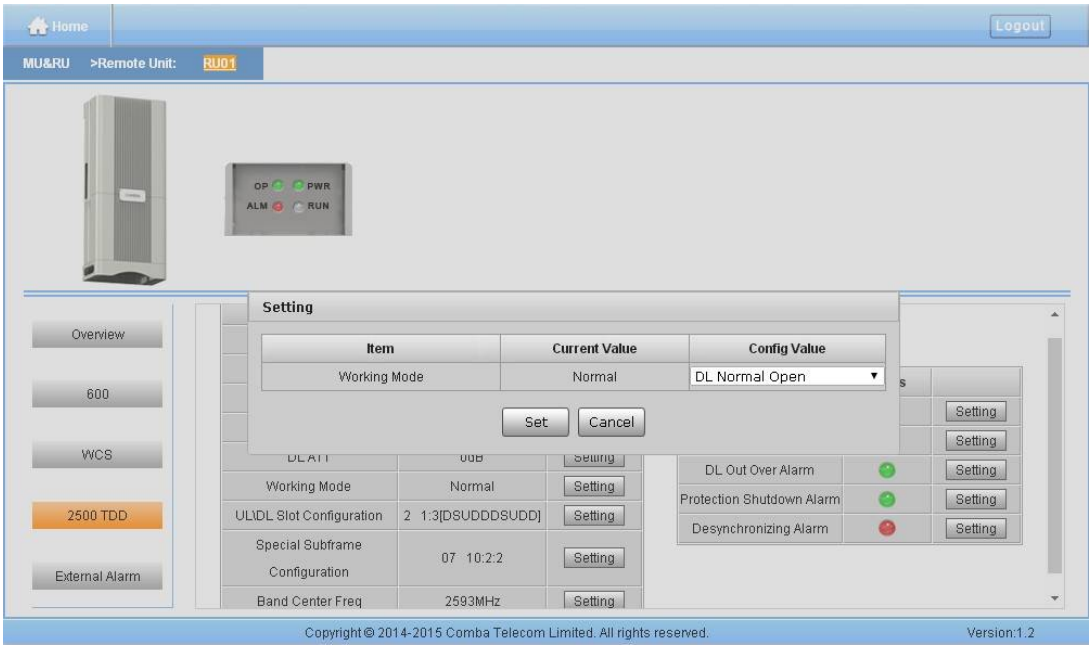

Figure 10: Commissioning Procedure – 2500 TDD working mode setting

Step 4 Repeat Step 1 & 2, click Next to enter to Params Setting page. Click Setting, users can set the device information and system time.

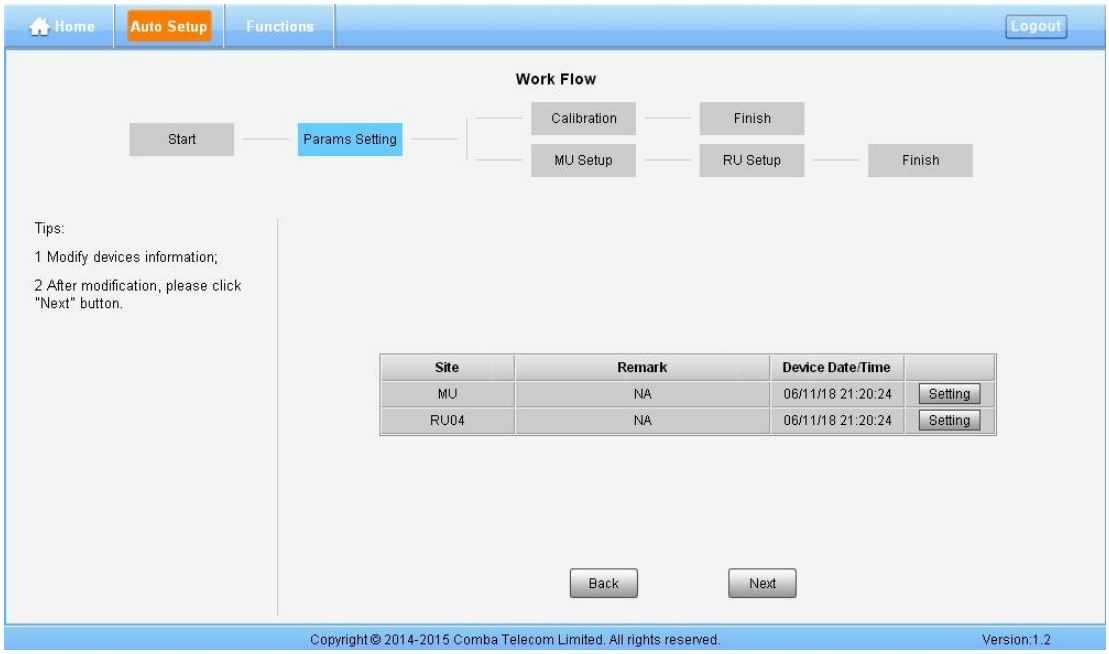

Figure 11: Commissioning Procedure - Params Setting

Dev Info mainly used to record device location and Date/Time provid a time reference. Mouse clicks the Config Value of Date/Time to auto receive the computer time.

Step 5: Click Next to enter to the page to select folw to continue. There are three flows to select: Calibration, Setup and Finish.

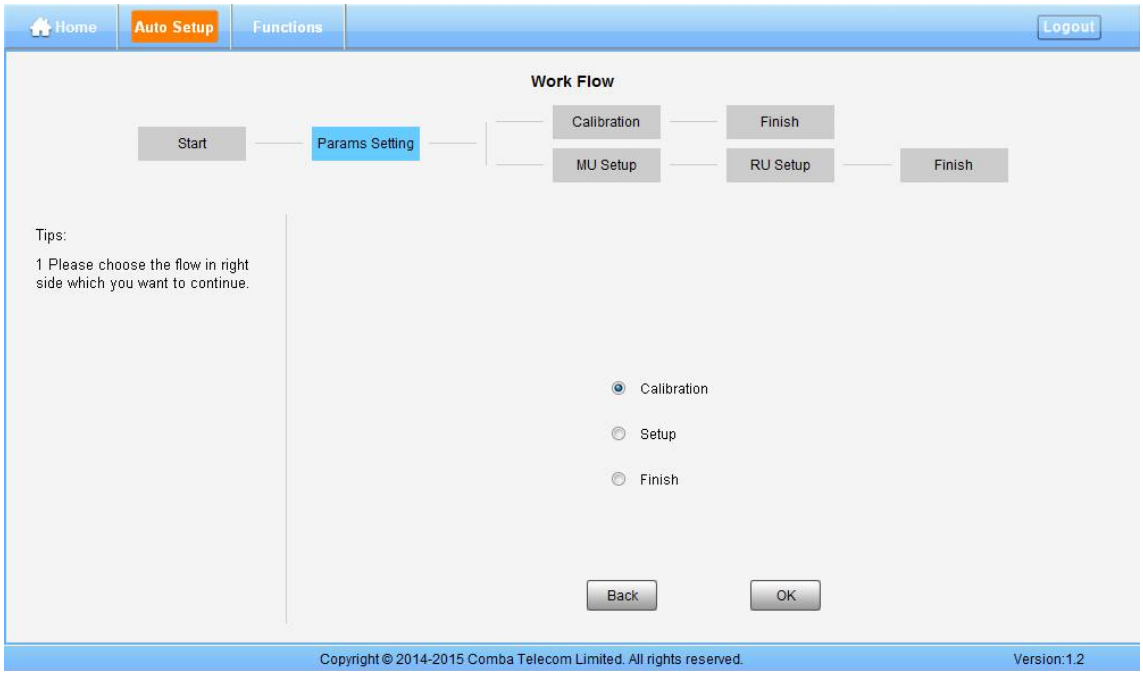

Figure 12: Flow to select

Note: Calibration is to adjust MU and RU gain to make sure system gain is normal, if the band have been calibrated, users can click Skip to skip the process; if the band never been calibrated, users click Skip in the step of Calibration, software can still procede to the next step of MU and RU setup, but the system gain will be a little deviation with normal valuer, so the final output power will be not same with the target DL output power.

NOTE: Make sure all the ANT ports of RUs are connected with dummy load or antenna system before proceeding to step 6.

Step 6: Select Calibration, shown as Figure 70, set the right synchronous carrier center frequency point for 2500 TDD in the poped out window, minimum scale is 100KHz, then select "Automatic Calibration" or "Manual Calibration".

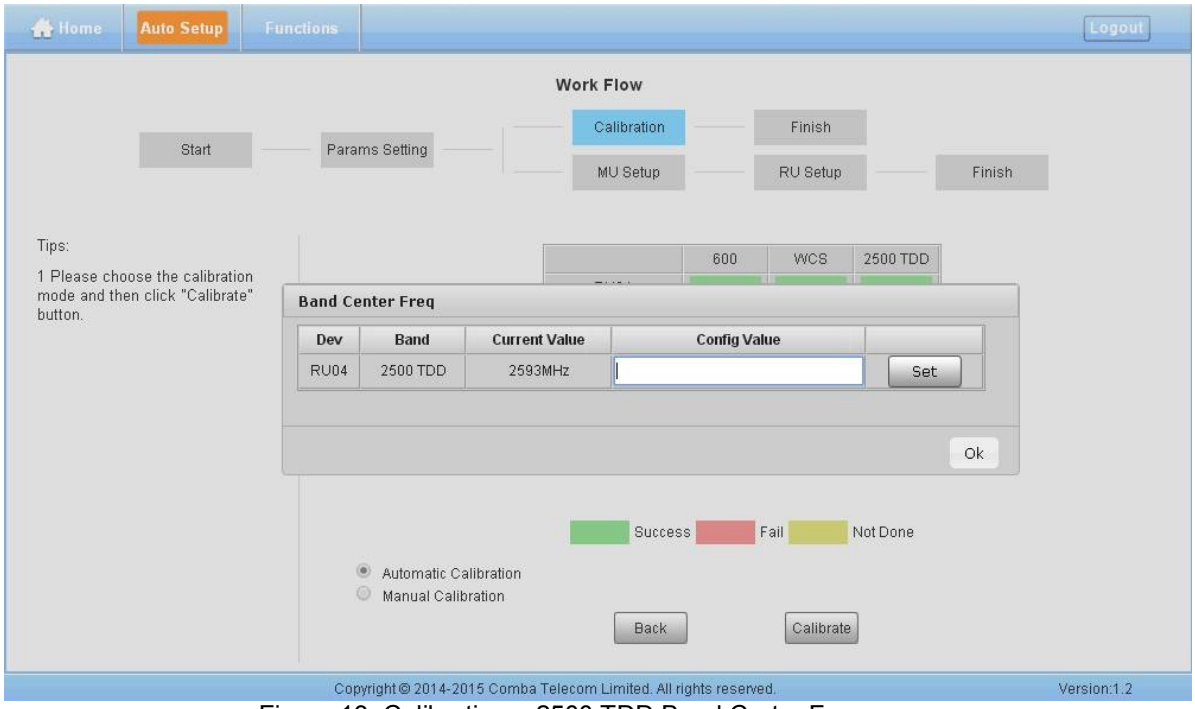

Figure 13: Calibration – 2500 TDD Band Certer Freq

Step 7: Click "Calibrate" and click “OK” to start the Calibratiion procedure, Figure 71.

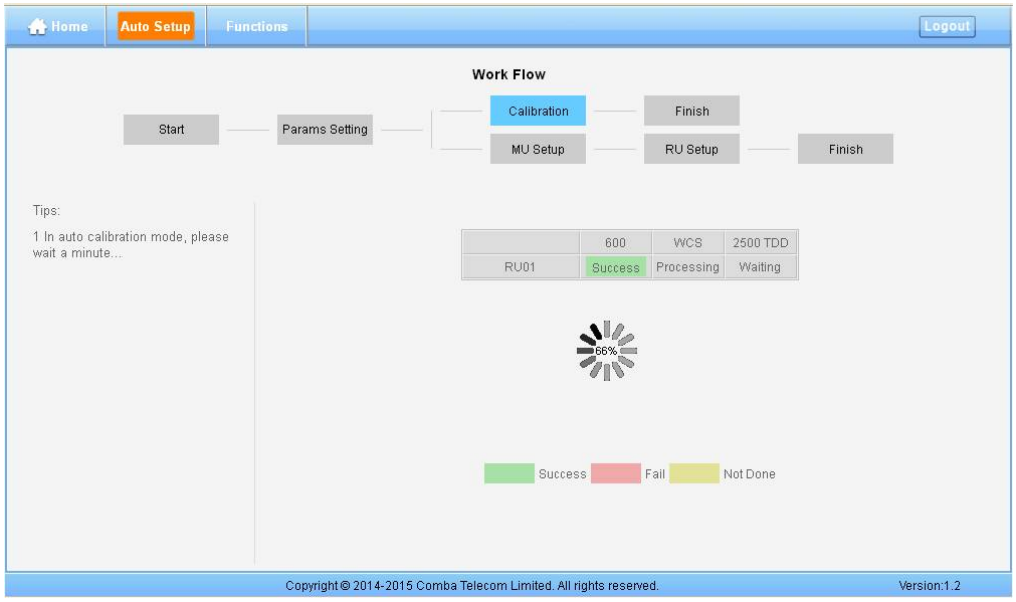

Figure 14: Commissioning Procedure - Calibration

- Automatic calibration no needs to select frequency band, the system will calibration all the band automatically.
- If users choose Manual calibration, then go to next page to select frequency band to calibrate.

Note: Make sure the ANT port of RU is connected with dummy load or antennas before Calibration. Several RU can be calibrated simultaneously.

Step 8: After Calibration is finished, go to MU Setup as in Figure 72, then RU Setup shown in Figure 73

Figure 15: Commissioning Procedure – MU Setup

Note: RU Setup includes “Remark”, “RF Switch”, “DL Input Power”.

Figure 16: Commissioning Procedure – RU Setup

Note: RU Setup includes “RF Switch”, “Target DL P_out”

Step 9: Back to [Home] page, set all 2500 TDD channel Working Mode to “Normal”, and set the right TD-LTE “DL/UL Slot Configuration” and “Special Subframe Configuration”, as in Figure 67.

Note:

As the system calibration process is calibrated for single channel, so if there is more than one same band input, because of the power superposition, the band total output power will higer than target DL output power after the calibration is complete.

The calibration work is mainly to set device to reach it’s theoretical gain, so when there are two or more same bands access into and they have the same input power level, each channel will reach it’s rated power, so the total output power will be (input A+gain) + (inputB+gain)+…+(inputN+gain). For example, if there are two 1900MHz bands acess to MU, each has 10dBm input power, the total output power of RU 1900MHz will be 30dBm+30dBm=33dBm.

Refer to the method below for the gain adjustment:

Suppose a band with N independent inputs, each input signal power are all X dBm. Apparently, there exists the following relationship between input and output after finished auto communication on WEB GUI: X dBm + Gain = 30dBm, then the total output power for N channels access is X dBm + Gain + 10*Log(N) = 30 + 10*Log(N), so Users need to set 10*Log(N) RFU ATT on WEB GUI for each channel.

End of Section