IRCU
Internal Remote Control Unit (IRCU)

User Manual V1.3

Foreword

This user manual describes the basic use of electrical tilt antenna connected to the Internal Remote Control unit (IRCU). Due to different equipment and software upgrade, some description in this manual may differ from the actual use. Information contained in this document is subject to change without prior notice

Table of Contents

1.0 Safety Precautions 4
2.0 Overview 4
2.1 Main Purpose and Scope of Application 4
2.2 Model Description 4
2.3 Normal Working Conditions and Environment 4
2.4 Dimensions and Weight 4
3.0 IRCU Specification 5
4.0 RET System and Working Principle 5
4.1 RET System 5
4.2 Working Principle 5
4.3 Two BTS Working Principle 6
5.0 IRCU Installation and Connection 12
5.1 Installation Requirements 12
5.1.1 Control Cable Requirements 12
5.1.2 Power Supply 12
5.1.3 Installation Tools 12
5.2 IRCU Installation 12
5.2.1 IRCU-302, IRCU-502, IRCU-602 installation steps and methods 12
5.2.2 IRCU-C814 installation steps and methods 14
5.2.3 Connection between IRCU, PCU and Antenna Systems 16
5.3 Mapping of IRCU RET port to Phase Shifter & Scanning Mode 17
5.3.1 Mapping of IRCU-302 to Phase Shifter 19
5.3.2 Mapping of IRCU-502 to Tilt Ruler 19
5.3.3 Mapping of IRCU-602 to Tilt Ruler 20
5.3.4 Mapping of IRCU-C414 to Tilt Ruler 20
5.3.5 Mapping of IRCU-C814 to Tilt Ruler 21
5.3.6 Scanning Mode of IRCU 21
5.4 IRCU Control Cable, Lightning Protection and Grounding cables 22
5.4.1 Control cable, Lightning Protection and Grounding requirements 22
5.4.2 Grounding Kit Installation Procedure 24
6 Transportation and Storage 24
6.1 Transportation 24
6.2 Storage 24

1.0 Safety Precautions

- Install safety sign onsite to let public know that area is dangerous for public; operating personnel must use Protection Equipment during work.
- Pay attention for any high Voltage cable around during installation, be careful and avoid electrical shock.
- Make sure Antenna installed in protection angle of the tower Lightning rod.
- Grounding Cable must be installed, make sure the grounding resistance lesser than 5Ω.

2.0 Overview

2.1 Main Purpose and Scope of Application

IRCU is a controller for electrical tilt enabled antenna to perform remote electrical tilting.

It meets AISG2.0 standards, suitable to be use with all Ericsson, Nokia, Huawei, and ZTE AISG 2.0 Base Station.

2.2 Model Description

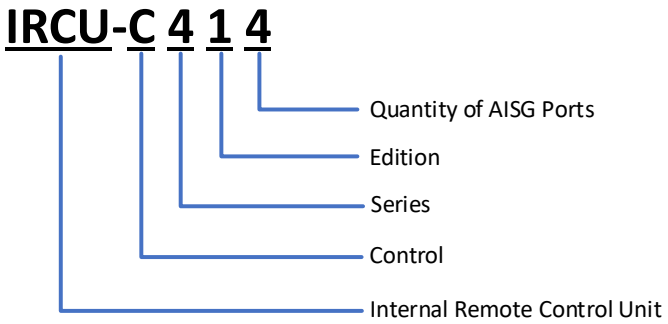

2.3 Normal Working Conditions and Environment

1. Ambient temperature: -40 ℃ to +60 ℃
2. Power supply: DC +10 V to +30 V

2.4 Dimensions and Weight

1. IRCU outline shown in Figure 1.

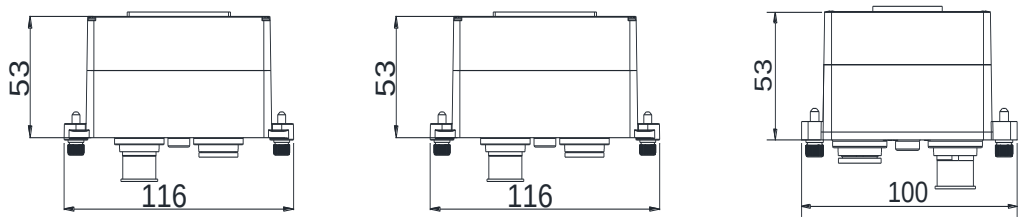

IRCU-602 IRCU-502 IRCU-302

1、操作时注意保护好主板，避免磕
2、安装透气膜时需带手套用镊子操
3、安装完成后，应放置24小时后才
4、所有的插件焊脚必需修剪至不高

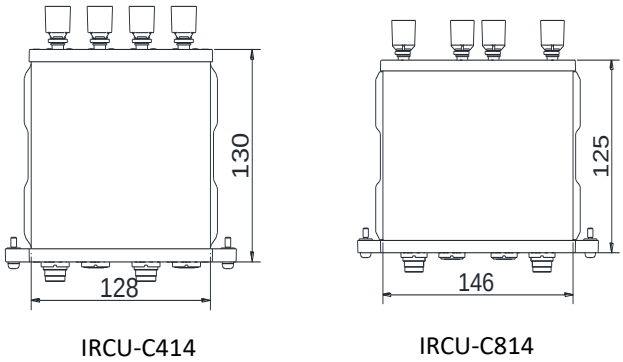

Figure 1 IRCU Outline

2. Size and weight are shown in Table 1.

Model	Dimensions (L × W × H)/mm	Weight/kg (Approximate)	Package Size (L × W × H)/mm
IRCU-302	100x53x26	0.2	142x108x60
IRCU-502	116x53x26	0.3	142x108x60
IRCU-602	116x53x26	0.3	142x108x60
IRCU-C414	128x130x31	0.6	TBD
IRCU-C814	125x146x55	1.3	TBD

Table 1 IRCU Dimensions and Weight

3.0 IRCU Specification

For IRCU specification please refer to IRCU Datasheet IRCU.
IRCU tilting angle with adjustment accuracy of ± 0.1 ° .

4.0 RET System and Working Principle

4.1 RET System

Remote Electrical Tilt (RET) system consists of two major part, electrical tilt enabled antenna and controller.

4.2 Working Principle

IRCU obtains control information or number of motor rotation pulse throughout calibration. By adjusting the motor rotation of IRCU, it is able to gain movement control of the phase shifter in an antenna, and thus able to control antenna electrical tilt angle. While maintaining real time communication between IRCU and PCU (Portable Control Unit), PCU send control command to IRCU; IRCU will return the control result to PCU, and PCU act as Human-Machines interface.

4.3 Two BTS Working Principle

IRCU-Cx14(x=4 or 8) serial has two pairs of AISG ports, is able to support 2 BTS control the common antenna. IRCU-Cx14 it has two buses but share one configuration file and uniqueID. IRCU-C414 is integrated 4 motors inside, IRCU-C814 is 8 motors.

The two pairs of AISG ports has no difference on function but priority, any band can be assigned by AISG port no matter AISG1 or2, if the band is not configured by the another AISG port.

If IRCU-C814 doesn't be configured yet, 2BTS both can get 8 bands information through scanning, shown in table 2

Serial Number	Address	Device Type	AISG
CB0Y1CB17C123456701	01	RET (0x01)	2.0
CB0Y2CB17C123456702	02	RET (0x01)	2.0
CB0Y3CB17C123456703	03	RET (0x01)	2.0
CB0Y4CB17C123456704	04	RET (0x01)	2.0
CB0Y5CB17C123456705	05	RET (0x01)	2.0
CB0Y6CB17C123456706	06	RET (0x01)	2.0
CB0Y7CB17C123456707	07	RET (0x01)	2.0
CB0Y8CB17C123456708	08	RET (0x01)	2.0

Table 2 IRCU Device Information

If a band is configured by a AISG port, then the another AISG ports can't see and control the band. Only the first AISG port agree and hand over the control right, then the other AISG port can see it through scan.

For instance, A BTS connects to IRCU-C814 AISG 1, B BTS connects to AISG 2, A BTS has already configured band No 2, 3 and 5, B BTS only can see serial band No 1, 4, 5, 6, 7, and 8 information through scanning, as shown in table 3.

Serial Number	Address	Device Type	AISG
CB0Y1CB17C123456701	01	RET (0x01)	2.0
CB0Y4CB17C123456704	04	RET (0x01)	2.0
CB0Y6CB17C123456706	06	RET (0x01)	2.0
CB0Y7CB17C123456707	07	RET (0x01)	2.0
CB0Y8CB17C123456708	08	RET (0x01)	2.0

Table 3 IRCU Device Information shown in B BTS

If B BTS configurate band No 1, 4 and 6, A BTS rescan IRCU only can see band No 2, 3,5, 7 and 8 after rescanning shown table 4.

Serial Number	Address	Device Type	AISG
CB0Y2CB17C123456702	02	RET (0x01)	2.0
CB0Y3CB17C123456703	03	RET (0x01)	2.0
CB0Y5CB17C123456705	05	RET (0x01)	2.0
CB0Y7CB17C123456707	07	RET (0x01)	2.0
CB0Y8CB17C123456708	08	RET (0x01)	2.0

Table 4 IRCU Device Information shown in A BTS

After A&B BTS finish the configuration, the final configuration like Figure 2-1, band No. 7 &8 are available for configured.

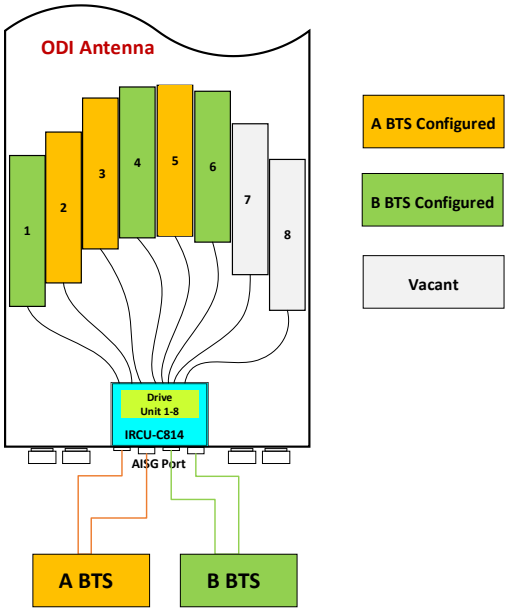

Serial Number	Address	Device Type	AISG
CB0Y1CB17C123456701	01	RET (0x01)	2.0
CB0Y2CB17C123456702	02	RET (0x01)	2.0
CB0Y3CB17C123456703	03	RET (0x01)	2.0
CB0Y4CB17C123456704	04	RET (0x01)	2.0
CB0Y5CB17C123456705	05	RET (0x01)	2.0
CB0Y6CB17C123456706	06	RET (0x01)	2.0
CB0Y7CB17C123456707	07	RET (0x01)	2.0
CB0Y8CB17C123456708	08	RET (0x01)	2.0

Figure 2 IRCU configuration

NOTICE:

2 BTS concurrent operation IRCU-Cx14 does not support 2 BTS scan, calibration, set tilt, update configuration file, update firmware simultaneously. Table 5 is the conflict outline for 2 BTS operation simultaneously.

BTS1/BTS2	Scan	Calibration	Set Tilt	L2 Restoration	L7 Restoration	Upload Config file	Firmware Update	Information	Set Device Data
Scan	X	√	√	√	√	X	X	√	√
Calibration	√	X	X	√	√	X	X	√	√
Set Tilt	√	X	X	√	√	X	X	√	√
L2 Restoration	√	√	√	√	√	X	X	√	√
L7 Restoration	√	√	√	√	√	X	X	√	√
Upload Config file	X	X	X	X	X	X	X	X	X
Firmware Update	X	X	X	X	X	X	X	X	X
Information	√	√	√	√	√	X	X	√	√
Set Device Data	√	√	√	√	√	X	X	√	√

X: not support 2 BTS concurrent operation

√: support 2 BTS concurrent operation

Table 5 2 BTS operation simultaneously notice

a) Scan

IRCU-Cx14 do not support 2 BTS scan IRCU simultaneously. If one AISG port is scanning, the another AISG port is available to calibration, set tilt, L2/7 restoration, get IRCU information, set device data **but upload configuration file and update firmware.**

When A BTS is scanning, if B BTS send order to IRCU, the impact to A BTS is shown in table 6

B BTS operation	If IRCU Support	Influence on A BTS
Scan	Support, but if A BTS has configured bands, then the bands can't see in B BTS	if B BTS has configured bands, then the bands can't see in A BTS
Calibration	Support	No effort
Set Tilt	Support	No effort
L2 /L7 Restoration	Support	No effort
Upload Configuration File	Support	Maybe broken link
Update Firmware	Support	Maybe broken link
Achieve Information	Support	No effort
Set Device Data	Support	No effort

Table 6

b) Calibration

IRCU-Cx14 do not support 2 BTS to do calibration simultaneously. If one AISG port is calibrating, the another AISG port is available to scan, L2/7 restoration, get IRCU information, set device data **but set tilt, upload configuration file and update firmware.**

When A BTS is calibrating, if B BTS send order to IRCU, the conflict between BTS A&B is shown in table 7.

B BTS operation	If IRCU Support	Influence on A BTS
Scan	Support	No effort
Calibration	Reply "busy"	No effort
Set Tilt	Reply "busy"	No effort
L2 /L7 Restoration	Support	No effort
Upload Configuration File	Maybe broken link	Maybe broken link
Update Firmware	Maybe broken link	Maybe broken link
Achieve Information	Support	No effort
Set Device Data	Support	No effort

Table 7

c) Set Tilt

IRCU-Cx14 do not support 2 BTS to do set tilt on a band simultaneously. If one AISG port is setting tilt, the another AISG port is available to scan, L2/7 restoration, get IRCU information, set device data **but calibration, upload configuration file and update firmware.**

When A BTS is setting tilt, if B BTS send order to IRCU, the conflict between BTS A&B is shown in table 8.

B BTS operation	If IRCU Support	Influence on A BTS
Scan	Support	/
Calibration	Reply "busy"	No effort
Set Tilt	Reply "busy"	No effort
L2 /L7 Restoration	Support	No effort
Upload Configuration File	Maybe broken link	Maybe broken link
Update Firmware	Maybe broken link	Maybe broken link or reply "WorkingSoftwareMissing"
Achieve Information	Support	No effort
Set Device Data	Support	No effort

Table 8

d) L2 /L7 Restoration

IRCU-Cx14 support 2 BTS to restore L2 or L7 simultaneously. If one AISG port is restoring L2 or L7, do not suggest the another AISG port to do any operation as when the restoration finish, IRCU will be reset.

e) Upload Configuration File
IRCU-Cx14 do not support 2 BTS to upload configuration file simultaneously. If one AISG port is uploading configuration file, do not suggest the another AISG port to do any operation as IRCU will be broken link after uploading finish.

f) Update Firmware
IRCU-Cx14 do not support 2 BTS to update firmware simultaneously. If one AISG port is updating firmware, do not suggest the another AISG port to do any operation as IRCU will be broken link after updating firmware finish.

g) Achieve Information
IRCU-Cx14 support 2 BTS achieve IRCU information simultaneously. If one AISG port is achieving IRCU information, the another AISG port is also available to scan calibration, set tilt, L2/7 restoration, set device data **but upload configuration file and update firmware.**

When A BTS is achieving IRCU information, if B BTS send order to IRCU, the impact to A BTS is shown in table 9.

B BTS operation	If IRCU Support	Influence on A BTS
Scan	Support	No effort
Calibration	Support	No effort
Set Tilt	Support	No effort
L2 /L7 Restoration	Support	No effort
Upload Configuration File	Support	Maybe broken link
Update Firmware	Support	Maybe broken link
Achieve Information	Support	No effort
Set Device Data	Support	No effort

Table 9

h) Set Device Data
IRCU-Cx14 support 2 BTS set device data simultaneously. If one AISG port is setting device data, the another AISG port is also available to scan calibration, set tilt, L2/7 restoration, get IRCU information **but upload configuration file and update firmware.**

When A BTS is setting device data, if B BTS send order to IRCU, the impact to A BTS is shown in table 10

B BTS operation	If IRCU Support	Influence on A BTS
Scan	Support	No effort
Calibration	Support	No effort
Set Tilt	Support	No effort
L2 /L7 Restoration	Support	No effort
Upload Configuration File	Support	Maybe broken link
Update Firmware	Support	Maybe broken link
Achieve Information	Support	No effort
Set Device Data	Support	No effort

Table 10

i) Caution: The user is cautioned that changes or modifications not expressly approved by the party responsible for compliance could void the user's authority to operate the equipment.

This device complies with Part 15 of the FCC Rules. Operation is subject to the following two conditions: (1) this device may not cause harmful interference, and (2) this device must accept any interference received, including interference that may cause undesired operation.

NOTE: This equipment has been tested and found to comply with the limits for a Class B digital device, pursuant to Part 15 of the FCC Rules. These limits are designed to provide reasonable protection against harmful interference in a residential installation. This equipment generates, uses and can radiate radio frequency energy and, if not installed and used in accordance with the instructions, may cause harmful interference to radio communications. However, there is no guarantee that interference will not occur in a particular installation.
If this equipment does cause harmful interference to radio or television reception, which can be determined by turning the equipment off and on, the user is encouraged to try to correct the interference by one or more of the following measures:
-- Reorient or relocate the receiving antenna.
-- Increase the separation between the equipment and receiver.
-- Connect the equipment into an outlet on a circuit different from that to which the receiver is connected.
-- Consult the dealer or an experienced radio/TV technician for help.

5.0 IRCU Installation and Connection

5.1 Installation Requirements

5.1.1 Control Cable Requirements

Control Cable connector:

Meet the requirements of IEC60130-9 8-pin connector. End of cable are composition of Male and Female Connectors, connector and cable core meet the AISG interface standard requirements.

Cable:

Composition of 5 core with metal and plastic protective layer shielding cable, core diameter requirements: 3 × 0.75mm + 2 × 0.32mm.

Protection class:

IP65.

5.1.2 Power Supply

IRCU Input Power: DC +10 V ~ +30 V

5.1.3 Installation Tools

32mm open-end Torque wrench x 1.

5.2 IRCU Installation

5.2.1 IRCU-302, IRCU-502, IRCU-602 installation steps and methods

a) As shown in Figure 3-1, "AISG OUT" logo on Antenna cover need to align with IRCU “IN” and “OUT”, then insert IRCU into antenna mounting slot.

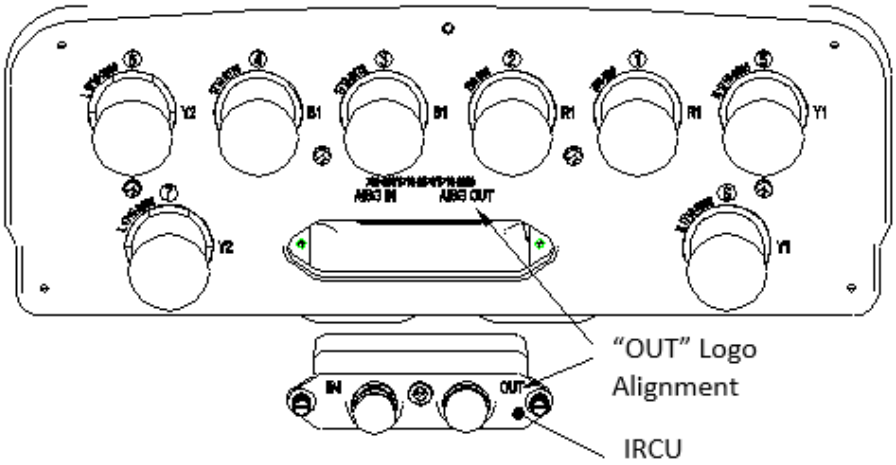

Figure 3-1 IRCU Installation

b) As shown in Figure 3-2, tighten screws on IRCU using a slotted type screwdriver.

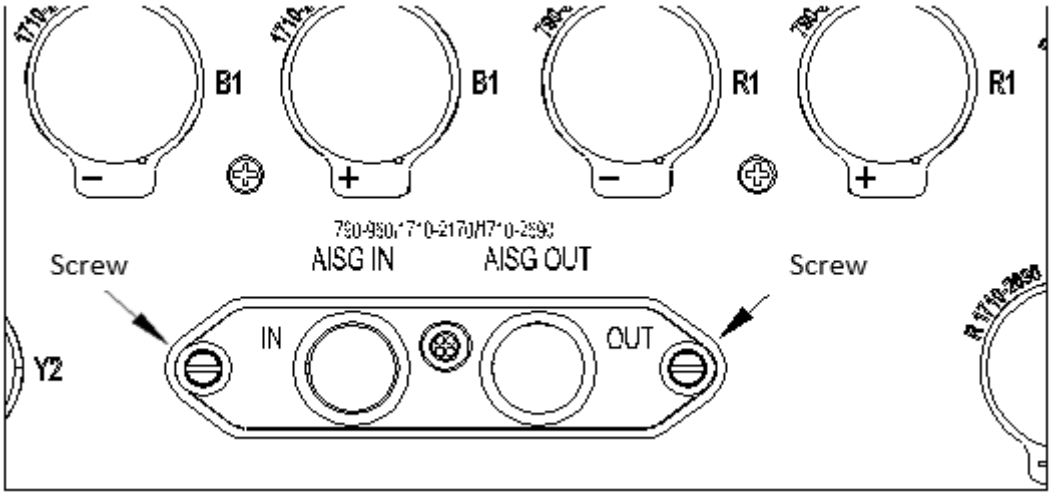

Figure 3-2 IRCU Installation

c) Figure 3-3, connect the control cable to the AISG Connector locate at the lower part of the IRCU and tighten the connector.

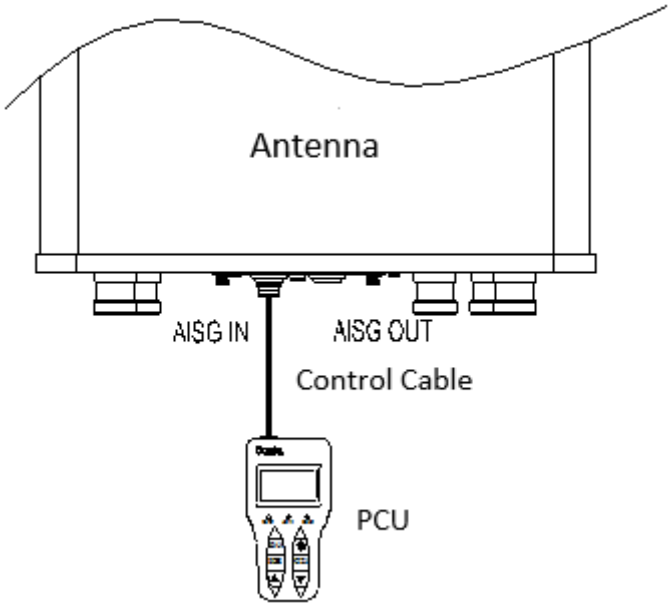

Figure 3-3 AISG Control Cable to PCU

d) If there is more than one IRCU need to be connect, daisy-chained cascade method can be used as show in Figure 3-4.

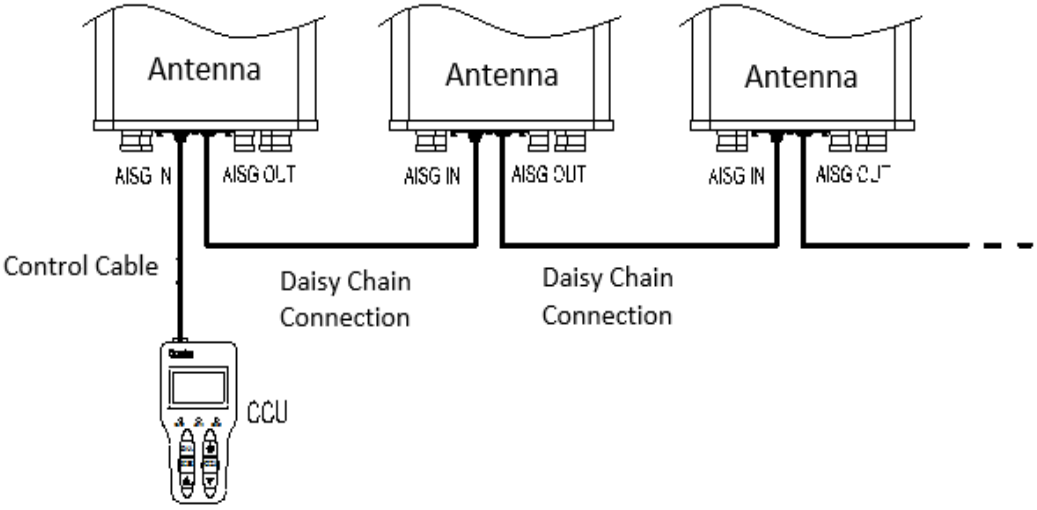

Figure 3-4 Multiple IRCU Daisy-Chain Cascade Schematic Diagram

**Note: The control cables and IRCU connectors at both ends were Male and Female connector. IRCU male connector used to receive Input Signal and connect with female connector of control cables; IRCU female connector used to transmit output signal and cascade in series to another IRCU using male cable connector. Control cables from PCU only can be connect to the male connector of IRCU.

e) Water proof: Firstly wrap three layers of waterproof tape, then wrap three layers of insulating tape, fastened with cable ties at both ends.

5.2.2 IRCU-C814 installation steps and methods

a) As shown in Figure 4-1, "AISG OUT" logo on Antenna cover need to align with IRCU “IN” and “OUT”, then insert IRCU into antenna mounting slot.

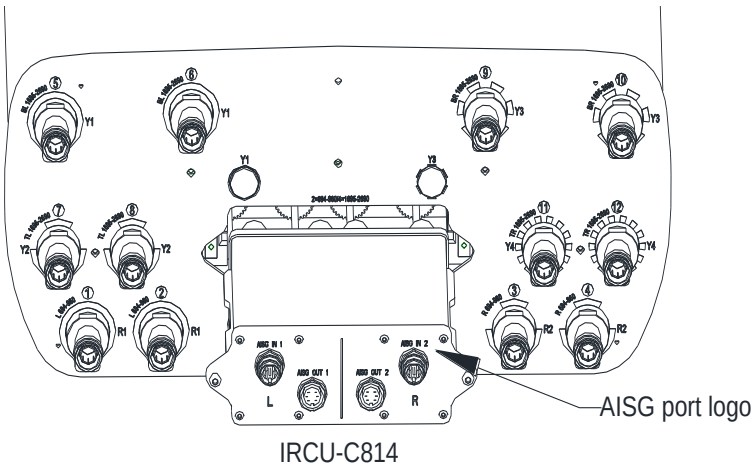

Figure 4-1 IRCU Installation

b) As shown in Figure 4-2, tighten screws on IRCU using a slotted type screwdriver.

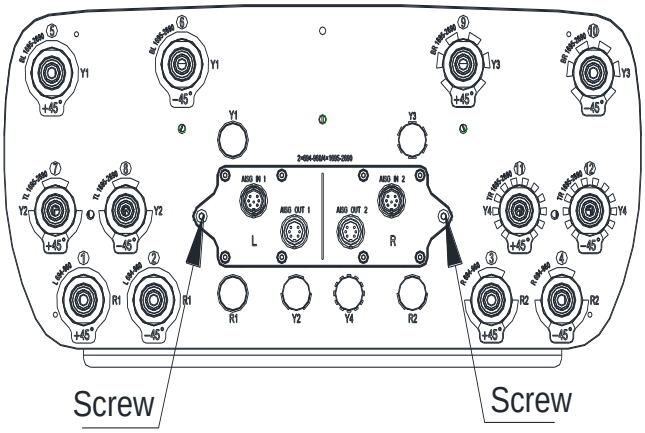

Figure 4-2 IRCU Installation

c) Figure 4-3, connect the control cable to the AISG Connector locate at the lower part of the IRCU and tighten the connector.

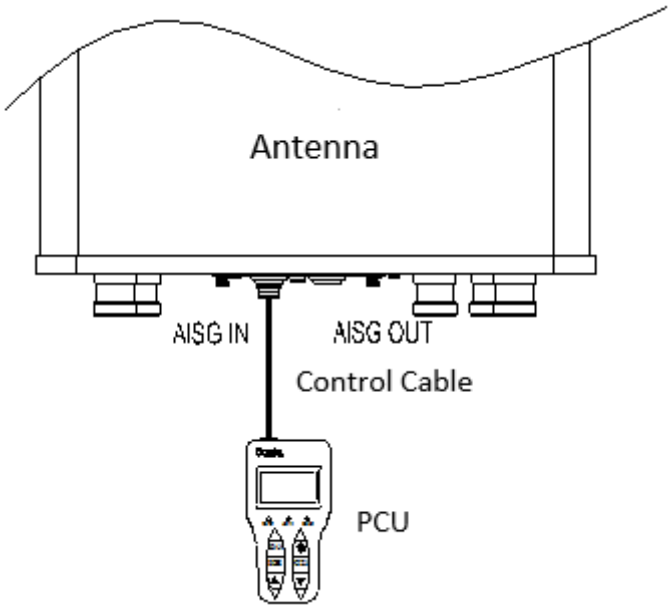

Figure 4-3 AISG Control Cable to PCU

d) If there is more than one IRCU need to be connect, daisy-chained cascade method can be used as show in Figure 4-4.

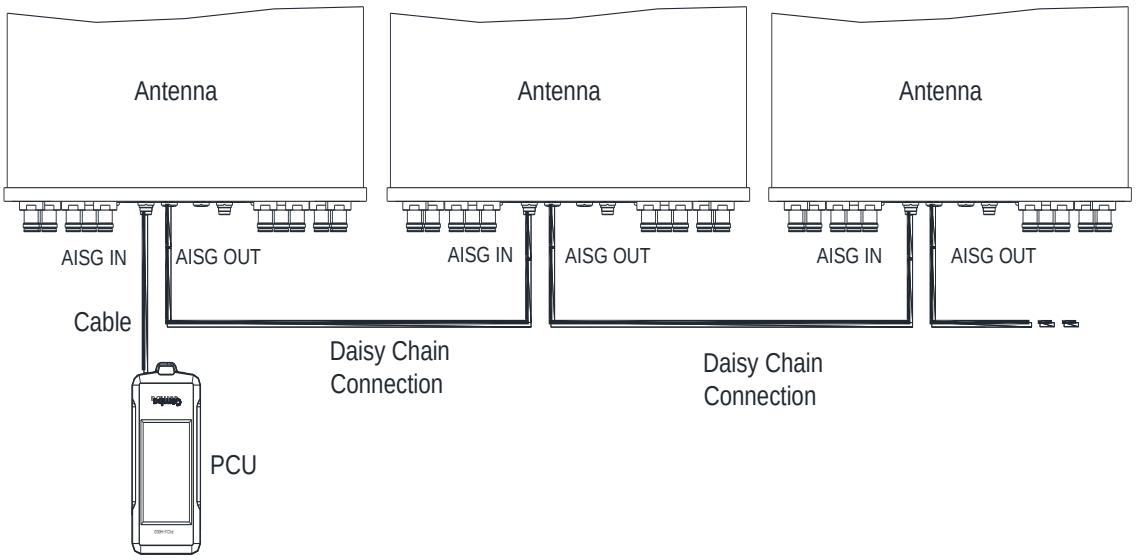

Figure 4-4 Multiple IRCU Daisy-Chain Cascade Schematic Diagram

**Note: The control cables and IRCU connectors at both ends were Male and Female connector. IRCU male connector used to receive Input Signal and connect with female connector of control cables; IRCU female connector used to transmit output signal and cascade in series to another IRCU using male cable connector. Control cables from PCU only can be connect to the male connector of IRCU.

e) Water proof: Firstly wrap three layers of waterproof tape, then wrap three layers of insulating tape, fastened with cable ties at both ends.

5.2.3 Connection between IRCU, PCU and Antenna Systems

Connection between IRCU, PCU and antenna system connections are shown in Figure 5. There are three connections, namely:

Figure 5(a): IRCU directly connected with the PCU via the control cable;

Figure 5(b): IRCU connected with antenna system terminal SBT (Smart Bias-T), PCU and the base station apparatus connected to the end of SBT, the control signal transmitted thru the RF feeder.

Figure 5(c): IRCU connected with AISG interface enable TMA, PCU and the base station apparatus connected to the end of SBT, the control signal transmitted thru the RF feeder.

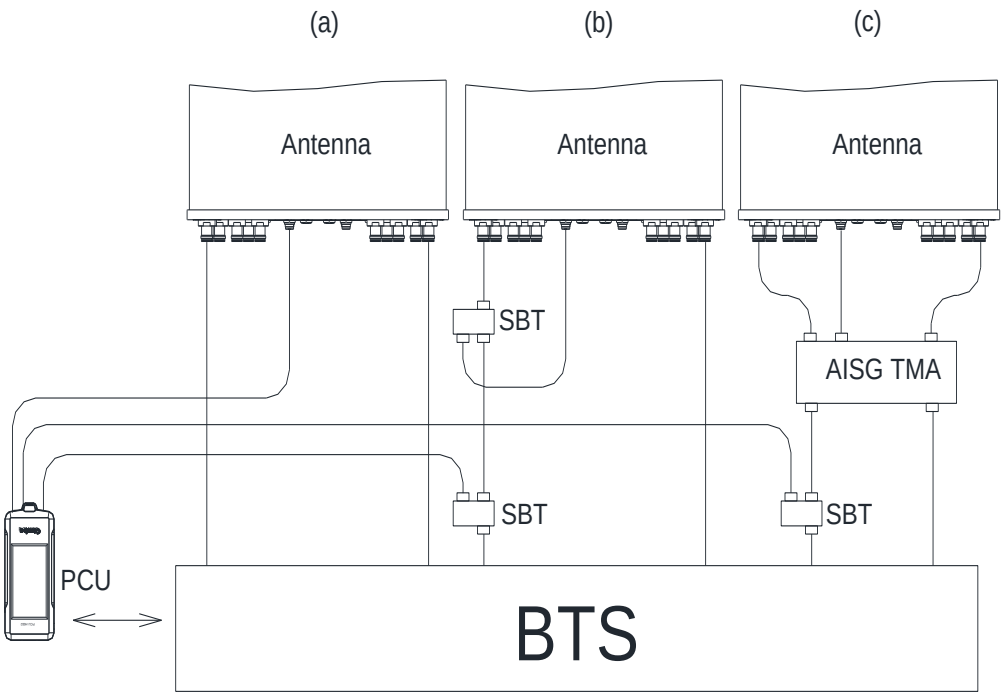

Figure 5 IRCU, PCU and Antenna System Connection Diagram

5.3 Mapping of IRCU RET port to Phase Shifter & Scanning Mode

Comba existing IRCU products can satisfy 1 to 8 RET phase shifter control. All control and driver chip are integrated into single IRCU module whereby the usage of IRCU can be further categorized. The relative specifications are as shown in Table 11. It may be noted that Comba R&D, with the current technical skills, is able to rapidly develop a series of new IRCU module containing higher number of driving control unit, so as to meet the requirement of in-built RCU electrical tilt antenna with higher number of frequency bands supported.

Parameter / Product	No. of Motor Driving Control Unit	Suitable RET Antenna	Installation Manner
IRCU-302	3	1 to 3 freq band build-in RCU RET Antenna	Plug and play
IRCU-C414	4	1 to 4 freq band build-in RCU RET Antenna	Plug and play
IRCU-502	5	4 to 5 freq band build-in RCU RET Antenna	Plug and play
IRCU-602	6	6 freq band build-in RCU RET Antenna	Plug and play
IRCU-C814	8	5 to 8 freq band build-in RCU RET Antenna	Plug and play

Table 11 IRCU in relation to Antenna Suitability

Comba IRCU products, as shown in Figure 6, employ the usage of socket, so as to realize the plug-and-play function whereby the IRCU can be easily installed or uninstalled. It greatly enhances the reliability of the product in term of connection and utilization. Also, the maintenance is greatly simplified.

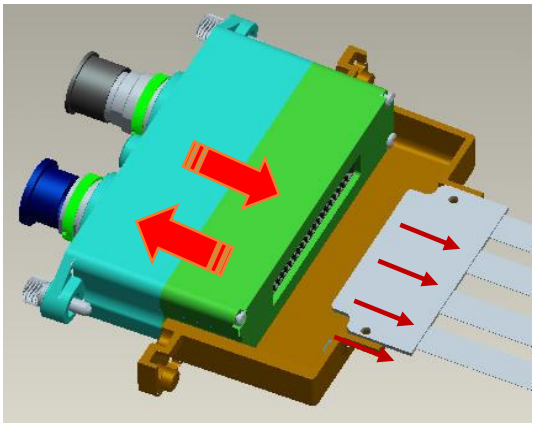

Figure 6 IRCU-302 Plug-and-play Installation

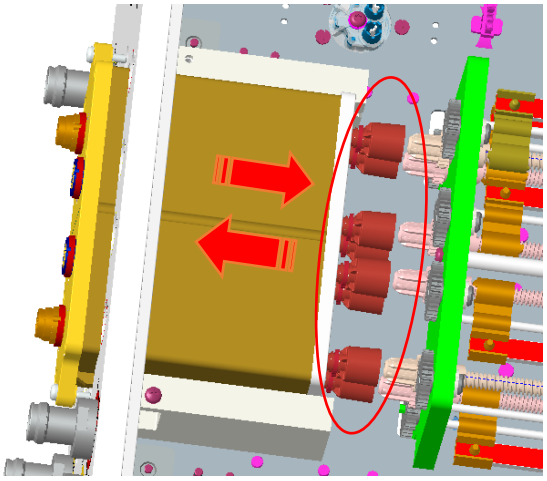

Figure 6 IRCU-C814 Plug-and-play Installation

5.3.1 Mapping of IRCU-302 to Phase Shifter

Each Driver Unit/Motor comes with own serial number whereby for Figure 7 below, 3 set of serial numbers will be displayed on PCU when connected.

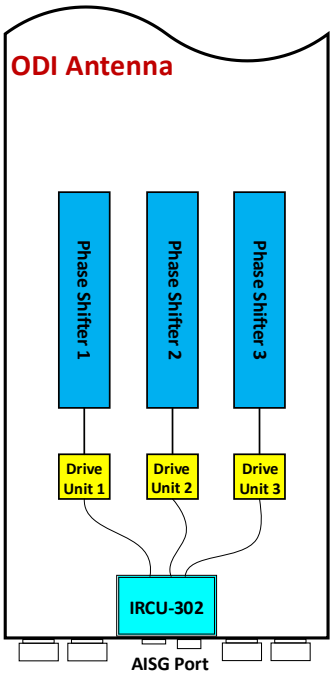

Figure 7 Mapping of IRCU-302 to Phase Shifter

5.3.2 Mapping of IRCU-502 to Tilt Ruler

Each Driver Unit/Motor comes with own serial number whereby for Figure 8 below, 5 set of serial numbers will be displayed on PCU when connected.

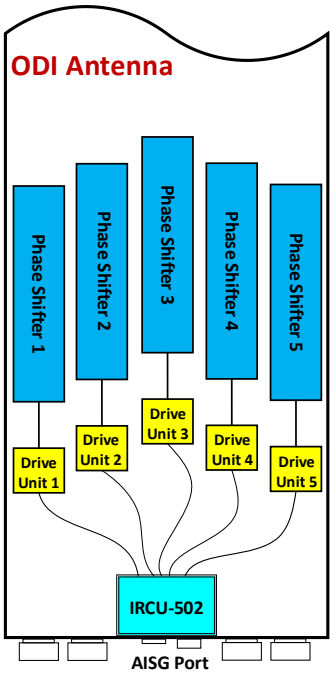

Figure 8 Mapping of IRCU-502 to Phase Shifter

5.3.3 Mapping of IRCU-602 to Tilt Ruler

Each Driver Unit/Motor comes with own serial number whereby for Figure 9 below, 6 set of serial numbers will be displayed on PCU when connected.

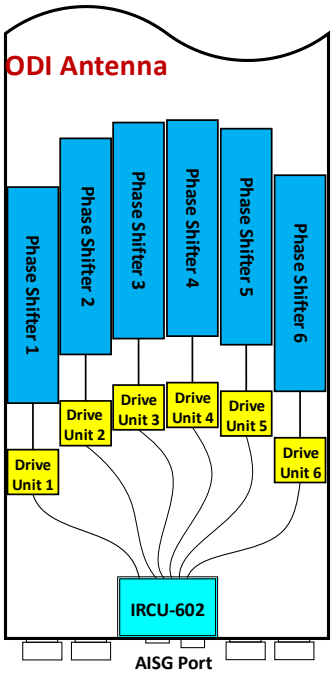

Figure 9 Mapping of IRCU-602 to Phase Shifter

5.3.4 Mapping of IRCU-C414 to Tilt Ruler

Each Driver Unit/Motor comes with own serial number whereby for Figure 10 below, 4 set of serial numbers will be displayed on PCU when connected.

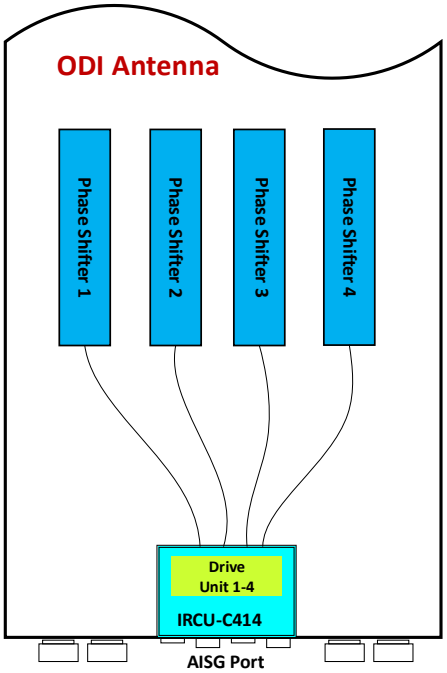

Figure 10 Mapping of IRCU-C414 to Phase Shifter

5.3.5 Mapping of IRCU-C814 to Tilt Ruler

Each Driver Unit/Motor comes with own serial number whereby for Figure 11 below, 8 set of serial numbers will be displayed on PCU when connected.

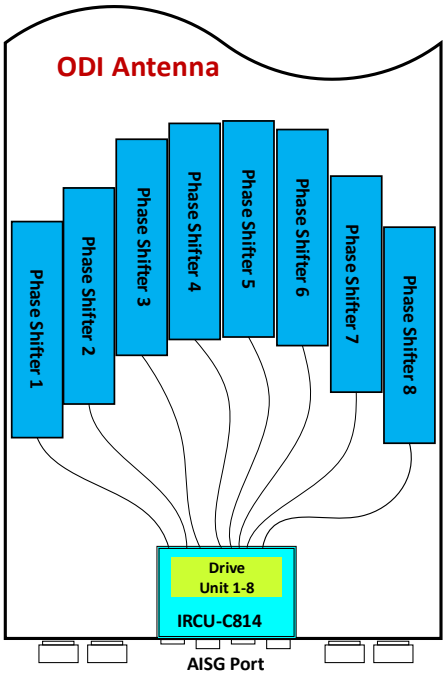

Figure 11 Mapping of IRCU-C814 to Phase Shifter

5.3.6 Scanning Mode of IRCU

For compatibility with different BTS/NodeB, Comba R&D designs 2 different modes of IRCU scanning: Single-mode and Multi-mode*. IRCU-302, IRCU-502 and IRCU-602 both support Single-mode and Multi-mode, IRCU-C414 and IRCU-C814 support Single-mode.

Single-mode is the default setting for all IRCU but both modes actually have no difference in term of function controlling. Taking IRCU-302 for example, being used in 3 frequency band build-in RCU RET antenna and in 3 sectors deployment as shown in Figure 12:

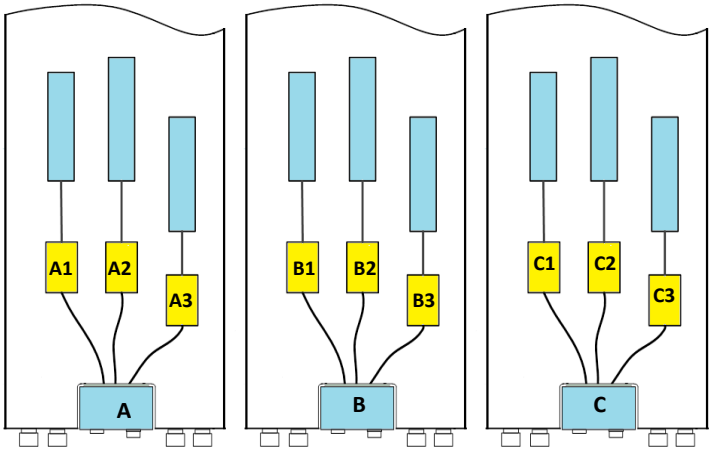

Figure 12 Three Tri-band ODI Antenna

*If operators wish to use multi-mode, kindly contact supplier to provide .bin file configuration.

Single-mode scan: For this mode, all the devices will be shown independently. No sub-devices.

1. IRCU-302, A1
2. IRCU-302, A2
3. IRCU-302, A3
4. IRCU-302, B1
5. IRCU-302, B2
6. IRCU-302, B3
7. IRCU-302, C1
8. IRCU-302, C2
9. IRCU-302, C3

Figure 13 Single-mode Scanning with Main Devices only

Multi-mode scan: When BTS/NodeB start scanning with multi-mode, 3 main devices (A, B and C) are detected first, then their sub-devices (A1, A2, A3, B1, B2, B3, C1, C2, C3) can be controlled independently.

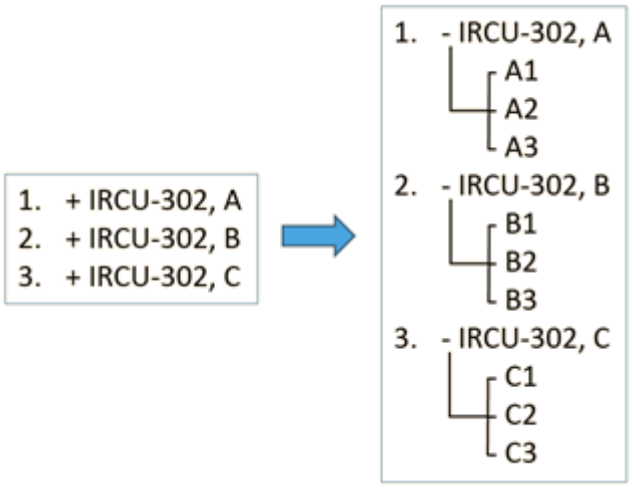

Figure 14 Multi-mode Scanning with Main Devices & Sub-devices

5.4 IRCU Control Cable, Lightning Protection and Grounding cables

5.4.1 Control cable, Lightning Protection and Grounding requirements

IRCU control cable can connect through SBT or TMA (as shown in Figure 5 (b), (c)), normally control cable will be short and not more than 2m, lighting protection and grounding will be implemented along the RF feeder and hence it is not necessary for control cable to carry out lightning Protection and grounding again.

However, if IRCU and control cable are connected as Figure 5 (a), whereby control cable connect to RCU directly, then it is necessary for the cable control to proceed with Lightning Protection and Ground requirement. Details as follows:

a) Control cables that connect to base station antenna should be within the scope of protection of the air terminals. Air terminals shall establish special lightning current deflectors, materials suitable are 4mm x 40 mm galvanized flat steel.

b) Control cables metal sheath should be clamp to grounding kit within 1m of antenna, 1m within the cable tray at the bottom of the tower, and 1m before entering base station shelter. Make sure grounding cable is installed property, feeder window of the shelter room should be close to the ground and properly connect to the grounding bar that leads to the ground. (See Figure 15)

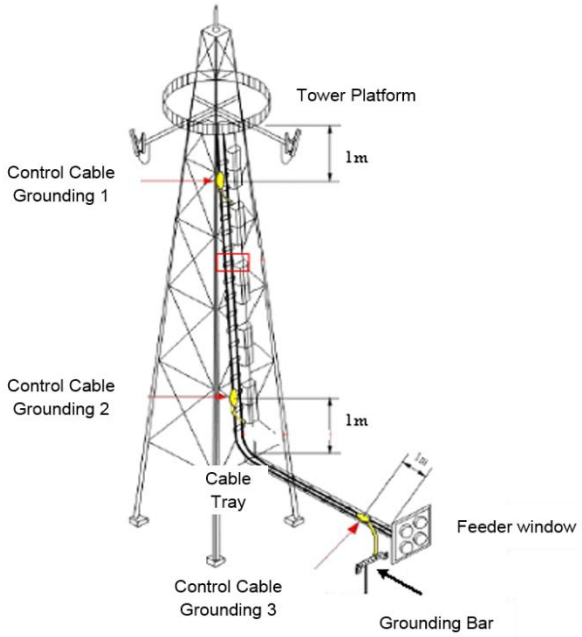

Figure 15

c) Control cables metal sheath attach to grounding kit as shown in Figure 16.

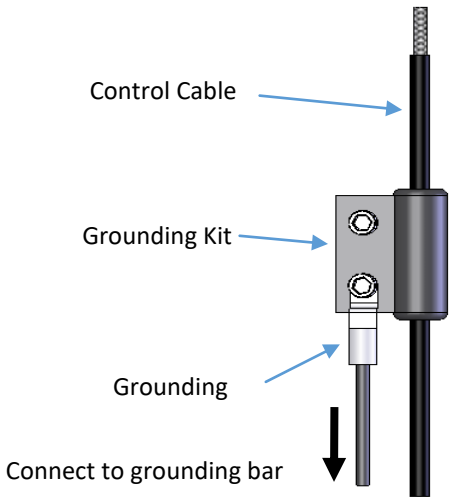

Figure 16

5.4.2 Grounding Kit Installation Procedure

a) Prepare ground kit, as shown in Figure 17 1a.

b) Clean the plastic sheath of the control cables, cutting plastic sheath with a suitable stripper tool, expose metal braid sheath of control cable, with length about 22mm, as shown in the Figure 17 1b.

c) Remove the protection sheet on the ground kit, clamping the grounding kit around the control cable, and align with striped line as shown in Figure 18.

d) Tighten the screws of the grounding kit, as show in Figure 19.

e) Connect and tighten grounding cable on the grounding bar which locate at bottom of the tower.

**Note: The control cables should be in upright position while clamping with grounding kit.

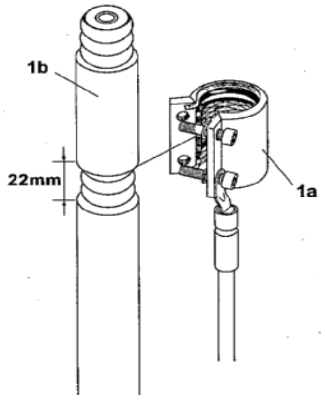

Figure 17

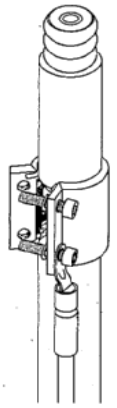

Figure 18

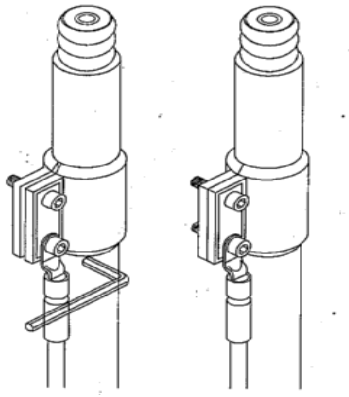

Figure 19

6 Transportation and Storage

6.1 Transportation

Equipment can be carriage by car, train, ship, airplane or other transportation vehicles. Do prevent rain, avoid excessive vibration and impact during the transportation. Handle with care while loading and unloading, strictly prohibit drop from height and other rough handling.

6.2 Storage

Packaged equipment should be placed in dry and ventilated area, ambient air without acidic, alkaline and other corrosive gas. Box stacking shall comply with specification on the box. Storage period should not exceeded two years, good stored for more than two years will need to pass re-inspection test before use

- End of Document -