Comba

CriticalPoint Public Safety DAS

DISTRIBUTED ANTENNA SYSTEM

USER MANUAL

Public Safety DAS System
QE: 1-0-0

Comba Telecom Network Systems Limited

The information contained herein is the responsibility of and is approved by the following, to whom all enquiries should be directed:

This is an unpublished work the copyright in which vests in Comba Telecom Network Systems Limited ("Comba"). All rights reserved.

The information contained herein is confidential and the property of Comba and is supplied without liability for errors or omissions. No part may be reproduced, disclosed or used except as authorized by contract or other written permission. The copyright and the foregoing restriction on reproduction and use extend to all media in which the information may be embodied.

0.1 CONTENTS

Section **Page**

0.1 CONTENTS ... 3
0.2 INDEX TO FIGURES AND TABLES ... 5
0.3 HISTORY ... 6
0.4 GLOSSARY OF TERMS ... 7
0.5 SAFETY NOTICES AND ADMONISHMENTS ... 9

1 GENERAL INFORMATION ... 11

2 EQUIPMENT DESCRIPTION ... 13
2.1 SYSTEM DIAGRAM ... 13
2.3 EQUIPMENT CONSTITUTION ... 14
2.4 EQUIPMENT CONNECTORS ... 14
2.4.1 PS V+UHF DAS CONNECTORS ... 14
2.5 TYPICLA APPLICATION ... 17
2.5.1 APPLICATION 1: ONE MU CONNECTS 32 RUS. ... 17
2.5.2 APPLICATION 2: 2 MU (MAIN MU AND BACKUP MU) CONNECT 32 RUS. ... 18
2.5.3 APPLICATION 3: 2MU (MAIN MU AND BACKUP MU) CONNECT 16RUS WITH OPTICAL FIBER BACKUP. ... 18
2.6 SPECIFICATION OF DAS SYSTEM ... 19

3 INSTALLATION ... 23
3.1 WARNINGS AND ALERTS ... 23
3.2 SITE PLANNING CONSIDERATIONS ... 24
3.2.1 SITE PLANNING ... 24
3.2.2 INSTALLATION CHECKLIST ... 25
3.3 INSTALLATION PROCEDURES ... 26
3.3.1 GOODS INWARDS INSPECTION ... 26
3.3.2 TOOLS ... 26
3.3.3 PREPARATION ... 26
3.3.4 WALL MOUNTING FOR MU AND RU ... 27
3.3.5 DRIP-LOOP ... 28
3.3.6 CABINET MOUNTING FOR EU ... 28
3.3.7 WALL MOUNTING FOR EU ... 30
3.3.8 GROUNDING ... 33
3.3.9 AC/DC POWER CONNECTION FOR MU ... 33
3.3.10 AC/DC POWER AND MONITOR CABLE CONNECTION BETWEEN MU AND EU ... 34
3.3.11 DC POWER AND MONITOR CABLE CONNECTION BETWEEN EU AND EU ... 35
3.3.12 RF CABLE CONNECTION ... 35
3.3.13 WEB ACCESS ... 35
3.3.14 DRY CONTACT CABLE ... 35

4 WEB GUI ... 38
4.1 WEB GUI CONNECTION ... 38
4.2 WEB GUI INTRODUCTION ... 39

5 COMMISSIONING ... 41
5.1 PRE-COMMISSIONING TASKS ... 41

5.2 COMMISSIONING PROCEDURE 41

6 MAINTENANCE 42

7 APPENDICES 43
7.1 APPENDIX A: TOOLS 43
7.2 APPENDIX B: DECLARATION OF HARMFUL SUBSTANCES AND CONTENT 44
7.3 APPENDIX D: RMA (RETURN MATERIAL AUTHORIZATION) 45

0.2 INDEX TO FIGURES AND TABLES

Figure 1: Master Unit (MU) 11
Figure 2: Expansion Unit (EU) 12
Figure 3: Remote Unit (RU) 12
Figure 4: PS V+UHF DAS Functional Block Diagram 13
Figure 5: MU Equipment Connectors 14
Figure 6: EU Equipment Connectors 15
Figure 7: RU Equipment Connectors 16
Figure 8: Application 1 System Diagram 17
Figure 9: Application 2 System Diagram 18
Figure 10: Application 3 System Diagram 18
Figure 11: Mounting Rack Overview-MU 26
Figure 12: Mounting Rack Overview-RU 27
Figure 13: PS V+UHF DAS (MU and RU) Wall Mounting 28
Figure 14: Dimension of Expansion Unit for Cabinet Mounting 29
Figure 15: Expansion Unit Cabinet Mounting 30
Figure 16: Expansion Unit Wall Mounting 30
Figure 17: The mounting hangers of Expansion Unit 31
Figure 18: Hole punching diagram for Wall-mounted installation 31
Figure 19: Expansion Unit Wall Mounting 32
Figure 20: AC/DC power connection for MU 33
Figure 21: DC power and Monitor cable connection for EU 34
Figure 22: DC power and Monitor cable connection for EU 35
Figure 23: Input IP Address 38
Figure 24: Input User Name and Password 38
Figure 25: Web GUI Main Screen 39
Figure 26: Dashboard Screen 39
Figure 27: Chanel Frequency Info 40
Figure 28: Sub Band Info 40

Table 1: MU Equipment Connectors 14
Table 2: EU Equipment Connectors 15
Table 3: RU Equipment Connectors 16
Table 4: Pin Definition of Dry Contact Cable 35
Table 5: Commissioning Task Explanation 41

 Copyright - refer to title page

0.3 HISTORY

Change No.	ENU	Details Of Change
1	1-0-0	This manual first created and issued in May. 2025.

Copyright - refer to title page

0.4 GLOSSARY OF TERMS

Abbreviation	Definition
ALC	Automatic Level Control
ATT	Attenuator
BTS	Base Transceiver Station
CH	Channel
CSA	Cross Sectional Area
dB	Decibel
dBm	Decibels relative to 1 milliwatt
DL	Downlink
DT	Donor Terminal
DPX	Duplexer
FOU	Fiber Optical Unit
FS	Frequency Selection
Hz	Hertz
ID	Identification
IF	Intermediate Frequency
LNA	Low Noise Amplifier
LOS	Line-of-Sight
MCU	Main Control Unit
MHz	Megahertz
MT	Mobile Terminal
MTBF	Mean Time Between Failures
MU	Master Unit
NF	Noise Figure
OMC	Operation & Maintenance Center
OMT	Operation & Maintenance Terminal
OP	Optical Fiber
PA	Power Amplifier
PLL	Phase Locked Loop
PSU	Power Supply Unit
RF	Radio Frequency
RFU	Radio Frequency Unit
RU	Remote Unit
SMA	Sub-Miniature A Connector
TX/RX	Transmit/Receive
UL	Uplink
VAC	Volts Alternating Current
VDC	Volts Direct Current
VSWR	Voltage Standing Wave Ratio

Copyright - refer to title page

Copyright - refer to title page

0.5 SAFETY NOTICES AND ADMONISHMENTS

This document contains safety notices in accordance with appropriate standards. In the interests of conformity with the territory standards for the country concerned, the equivalent territorial admonishments are also shown.

Any installation, adjustment, maintenance and repair of the equipment must only be carried out by trained, authorized personnel. At all times, personnel must comply with any safety notices and instructions.

Specific hazards are indicated by symbol labels on or near the affected parts of the equipment. The labels conform to international standards, are triangular, and are colored black on a yellow background. An informative text label may accompany the symbol label.

Hazard labeling is supplemented by safety notices in the appropriate equipment manual. These notices contain additional information on the nature of the hazard and may also specify precautions.

Note: The grantee is not responsible for any changes or modifications not expressly approved by the party responsible for compliance. Such modifications could void the user's authority to operate the equipment.

Warning Notices:

These draw the attention of personnel to hazards that may cause death or injury to the operator or others. Examples of use are cases of high voltage, laser emission, toxic substances, point of high temperature, etc.

The design of the antenna installation needs to be implemented in such a way so as to ensure RF radiation safety levels and non-environmental pollution during operation.

Note: Antennas, feeders and couplers are not included in the packing list; solution provider should consider these accessories according to site conditions.

MU and RU FCC Warning Notices:

WARNING. This is NOT a CONSUMER device. It is designed for installation by FCC LICENSEES and QUALIFIED INSTALLERS. You MUST have an FCC LICENSE or express consent of an FCC Licensee to operate this device. You MUST register Class B signal boosters (as defined in 47 CFR 90.219) online at www.fcc.gov/signal-boosters/registration. Unauthorized use may result in significant forfeiture penalties, including penalties in excess of $100,000 for each continuing violation.

EU Warning Notices:
This device complies with Part 15 of the FCC Rules. Operation is subject to the following two conditions:

(1) this device may not cause harmful interference, and
(2) this device must accept any interference received, including interference that may cause undesired operation.

Note: The grantee is not responsible for any changes or modifications not expressly approved by the party responsible for compliance. Such modifications could void the user's authority to operate the equipment.

Alert:
These draw the attention of personnel to hazards that may cause damage to the equipment. An example of use is the case of static electricity hazard.

 Copyright - refer to title page

Caution notices may also be used in the handbook to draw attention to matters that do not constitute a risk of causing damage to the equipment but where there is a possibility of seriously impairing its performance, e.g. by mishandling or gross maladjustment. Warnings and Cautions within the main text do not incorporate labels and may be in shortened form.

Disconnection of the RU RF connectors may cause damage to the equipment when power is on.
The application antenna and RF cable are not provided. The antenna gain should not exceed 0 dBi.

WARNING!
Use only authorized and approved antennas, cables and/or coupling devices! The use of unapproved antennas, cables or coupling devices could cause damage and may be of violation of FCC regulations. The use of unapproved antennas, cables and/or coupling devices is illegal under FCC regulations and may subject the user to fines.

This is a part 90.219 class B device

WARNING. This is NOT a CONSUMER device. It is designed for installation by FCC LICENSEES and QUALIFIED INSTALLERS. You MUST have an FCC LICENSE or express consent of an FCC Licensee to operate this device. The PS BDA can be configured as Class B Signal Booster.
You MUST register Class B signal boosters (as defined in 47 CFR 90.219) online at www.fcc.gov/signal-boosters/registration. Unauthorized use may result in significant forfeiture penalties, including penalties in excess of $100,000 for each continuing violation.

For compliant with the FCC uncontrolled exposure requirement, the maximum permissin gantenna gain is 0dBi, the permitted use distance away from device external antenna shall larger than 0.8 m for downlink.

End of Section

Copyright - refer to title page

1 GENERAL INFORMATION

The Public Safety Distributed Antenna System (hereinafter called " PS V+UHF DAS") consists of the Master Unit (MU：RX14V3-B), the Expansion Unit (EU) and Remote Unit (RU：RH14V3-B). The MU includes the MU Chassis, Power Supply Unit (PSU), and RF module. The Expansion Unit includes the optical modules. The Fiber Optical module is a modular design, and can support up to 4 or 8 independent Remote Units. The Remote Unit is designed with a compact form for easy installation.

The low signal transmission loss of optical fiber is applicable for long distance transmission. PS V+UHF DAS can support optical transmission with up to 6.5dBo of optical loss, equivalent to 8 miles of fiber length.

Main Features

- Supports P25 P1/P2, digital and conventional analog communications simultaneously
- Built-in cavity filtering to protect the unit from interference
- Up to 64 narrow band filters share by VHF and UHF band (Class A)
- Channelized Auto Level Control (ALC) supported (Class A)
- Channelized uplink squelch supported (Class A)
- Uplink PA shutdown during no traffic periods to minimize noise being introduced to the network (Class A)
- Supports up to 32 Remote Units when cascading Expansion Units
- Supports MU/FOU/Fiber Redundancy
- Web based GUI for intelligent configuration; SNMP supported
- Integrated Battery Charger Unit, Comba BBU V3 supported
- NFPA / IFC / UL 2524 compliant dry contact alarms, with LED displays
- External Comba Annunciator Panel supported

The following figure shows the enclosure of the PS V+UHF DAS Master Unit (MU), Expansion Unit (EU) and Remote Unit (RU).

Figure 1: Master Unit (MU)

Copyright - refer to title page

Figure 2: Expansion Unit (EU)

Figure 3: Remote Unit (RU)

End of Section

Copyright - refer to title page

2 EQUIPMENT DESCRIPTION

2.1 SYSTEM DIAGRAM

Remark: Battery Backup Unit shown as above figure is only used as a reserved port

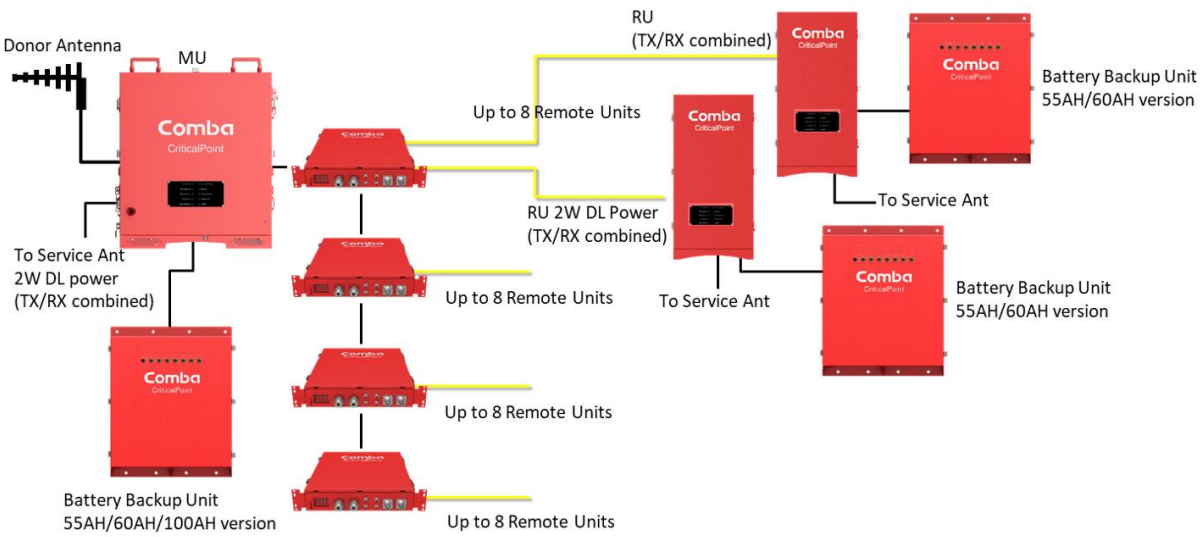

Figure 4: PS V+UHF DAS Functional Block Diagram

In the downlink path, the BTS signals are received by the donor antenna that is connected to the Master Unit. After the duplexer, the signals are sent to the LNA module for pre-amplification and to the digital RF integrated module for digital filtering and frequency conversion. Then the DL signals will be filtered via the duplexer, and then sent to the Expansion Unit(s), the RF signal is converted into an optical signal and then distributed to the Remote Unit(s) to over optical fiber. After amplification by the RU, the signals are transmitted at the MT port to the service antenna infrastructure.

In the uplink path, the mobile signals are received by the service antenna. After passing through the MT port duplexer, the signals are sent to the LNA and the integrated module for digital filtering, then the UL signals will be sent to the Expansion Unit(s), the RF signal is converted into an optical signal and then distributed to the Master Unit for filtering by the duplexer and power amplification. Finally, the uplink signals are sent to the donor antenna for transmission back to the BTS.

Copyright - refer to title page

2.3 EQUIPMENT CONSTITUTION

The typical PS V+UHF DAS unit consists of the following components:

Power Amplifier (PA): It provides power amplification for both the UL and DL branches.

Main Control Unit (MCU): The MCU is used to monitor and control the operation of the repeater. It also provides the communication interface for remote control and status indication. LED indicators provide the operational status of the MCU.

Duplexer: The DPX is located near the MT and DT terminals and permits the uplink and downlink signals to share a common antenna.

Digital Integrated Module and Power Amplifier: Consists of the Power Conversion module, RF module, digital process module and monitoring modules. The Power Conversion module converts +28V DC voltage into +9VJK and +9VRF. +9VJK, +9VRF are supplied to the monitoring unit, and the RF unit in the integrated module separately. The RF module amplifies and converts the RF signal to IF signal. The Digital process module converts the IF signal into baseband signal via AD conversion and extraction, and filtering. After that, the IF signal will be amplified and converted to an RF signal by the RF module for RF filtering and amplification. The Monitoring module monitors and controls the system parameters and is the interface for both remote monitoring and local commissioning.

Power Supply Unit (PSU): The PSU converts the input voltage into a stable DC supply to provide power for the internal functional modules.

Optical module: Completes optical signal and RF signal conversion.

2.4 EQUIPMENT CONNECTORS

2.4.1 PS V+UHF DAS CONNECTORS

The PS V+UHF DAS is designed for all cable entries to be routed from the right or left of the enclosure, as shown in the following figure.

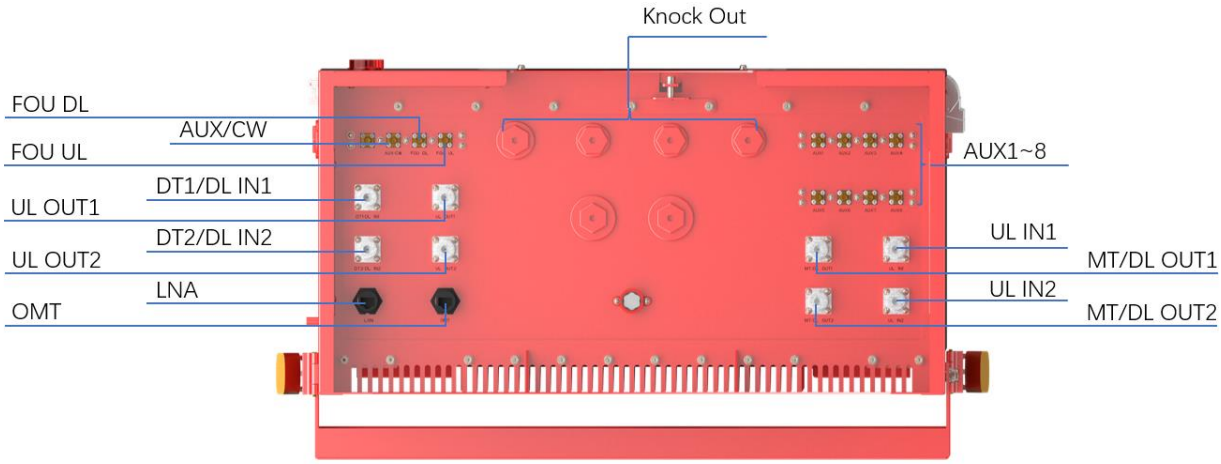

Figure 5: MU Equipment Connectors

Table 1: MU Equipment Connectors

Copyright - refer to title page

Identifier	Descriptions
Knock Out	3/4’’: For Hybrid cable (include AC cable and monitor cable from BBU) 1’’: Reserved. 1/2’’: For Dry contactors or External alarm cables
LAN	RJ45 Connector for internet connection.
OMT	RJ45 Connector for local WEB GUI connection.
DT1/DL IN1	N-Female connector for connection to donor antenna.
DT2/DL IN2	N-Female connector for connection to donor antenna.
UL OUT1	Simplex, N-Female connector for connection to service antenna
UL OUT2	Simplex, N-Female connector for connection to service antenna
MT/DL OUT1	N-Female connector for connection to service antenna.
MT/DL OUT2	N-Female connector for connection to service antenna.
UL IN1	Simplex, N-Female connector for connection to donor antenna
UL IN2	Simplex, N-Female connector for connection to donor antenna
AUX1~8	Reserved
AUX/CW	Reserved
FOU DL	SMA-Female connector for connection to DL of FOU unit
FOU UL	SMA-Female connector for connection to UL of FOU unit

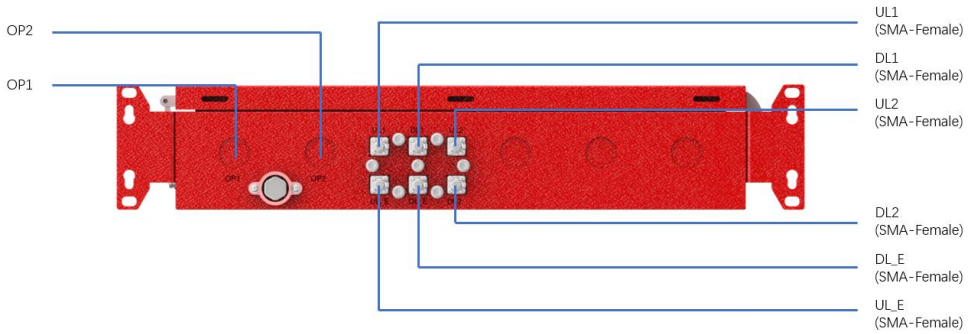

Figure 6: EU Equipment Connectors

Table 2: EU Equipment Connectors

Identifier	Descriptions

OP1/OP2	Optical ports
UL1	Connect IN1 of MU (Master Unit)
DL1	Connect OUT1 of MU (Master Unit)
UL2	Connect IN1 of MU (Slave Unit), this port is only used when the backup function is used
DL2	Connect OUT1 of MU (Slave Unit), this port is only used when the backup function is used
UL_E	Connect to UL1 of next EU for cascade connection
DL_E	Connect to DL1 of next EU for cascade connection

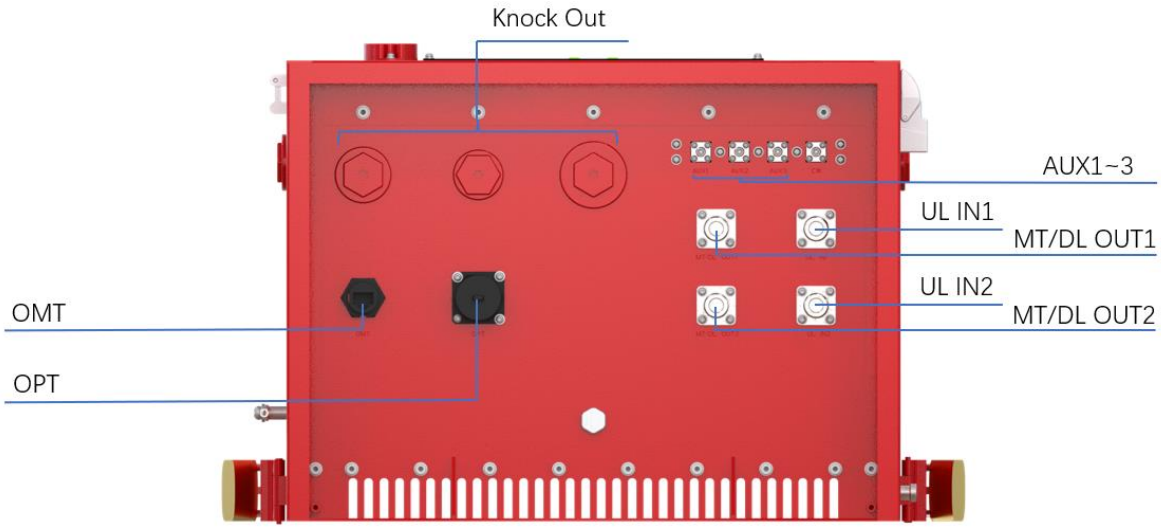

Figure 7: RU Equipment Connectors

Table 3: RU Equipment Connectors

Identifier	Descriptions
Knock Out	3/4’’: For Hybrid cable (include AC cable and monitor cable from BBU) 1’’: Reserved. 1/2’’: For Dry contactors or External alarm cables
OMT	RJ45 Connector for local WEB GUI connection.
OP	Optical port, connect to Expansion Unit
MT/DL OUT1	N-Female connector for connection to service antenna.
MT/DL OUT 2	N-Female connector for connection to service antenna.

Copyright - refer to title page

UL IN1	Simplex, N-Female connector for connection to service antenna.
UL IN2	Simplex, N-Female connector for connection to service antenna.

2.5 TYPICLA APPLICATION

2.5.1 APPLICATION 1: ONE MU CONNECTS 32 RUS.

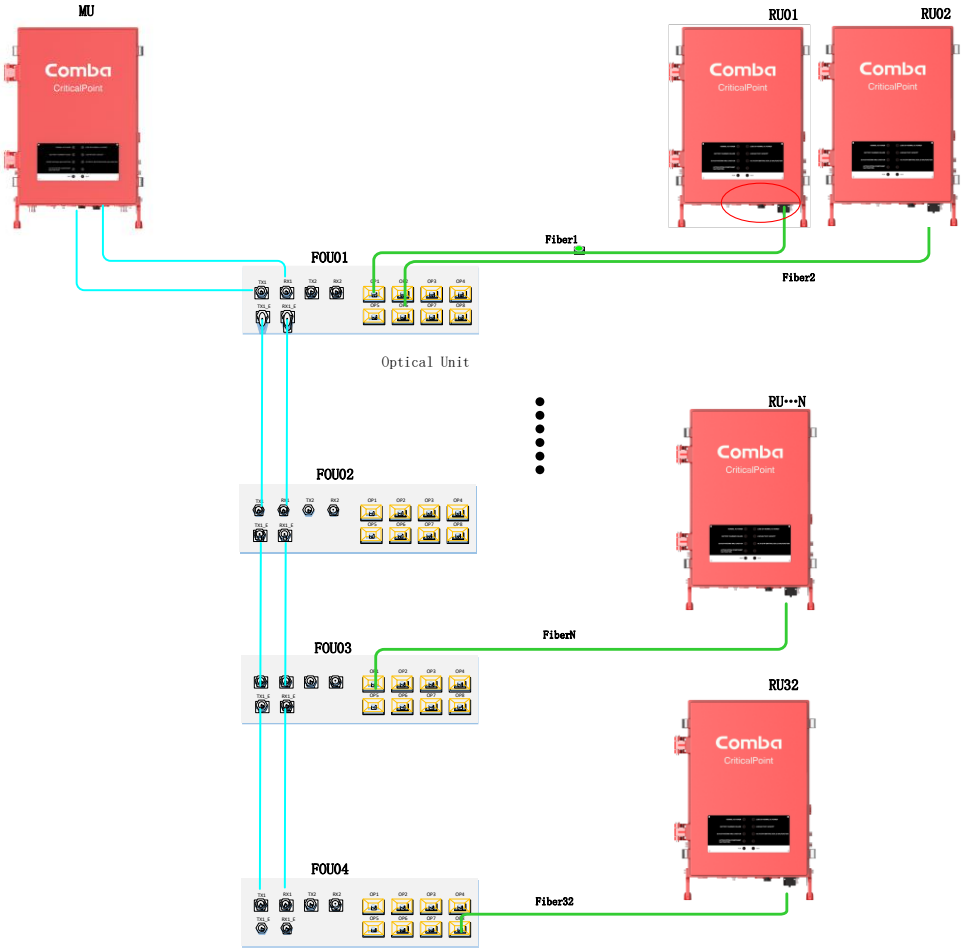

Figure 8: Application 1 System Diagram

Copyright - refer to title page

2.5.2 APPLICATION 2: 2 MU (MAIN MU AND BACKUP MU) CONNECT 32 RUS.

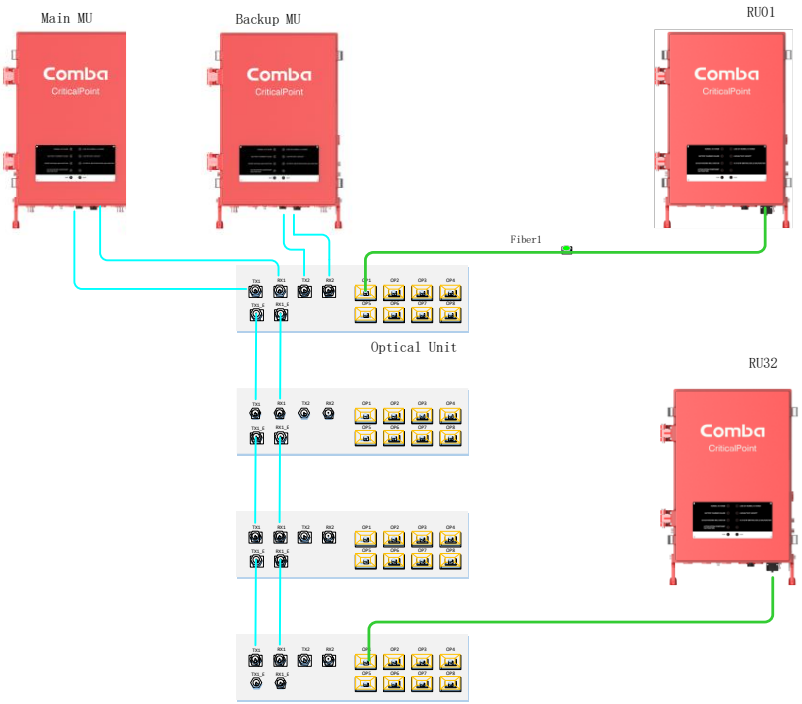

Figure 9: Application 2 System Diagram

2.5.3 APPLICATION 3: 2MU (MAIN MU AND BACKUP MU) CONNECT 16RUS WITH OPTICAL FIBER BACKUP.

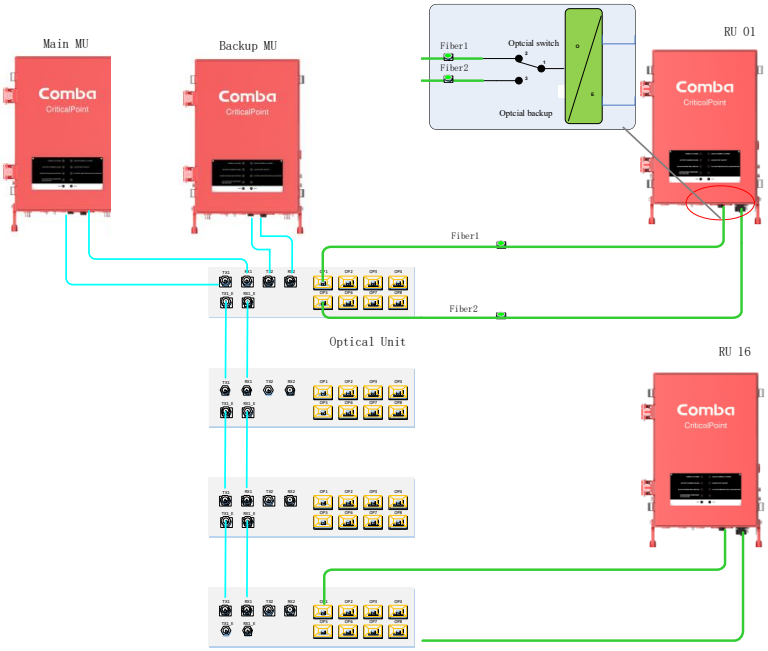

Figure 10: Application 3 System Diagram

2.6 SPECIFICATION OF DAS SYSTEM

Specifications – Fiber Optic Unit

Frequency Band	MHz	450-512
Optical Wavelength Uplink	nm	1310
Optical Wavelength Downlink	nm	1550
Optical Connector Type		SC-APC
Optical Fiber Type		Single Mode, WDM (single strand of fiber per Remote Units)
VSWR		≤ 1.5
Number of RU supported per FOU		Up to 4 or 8 RU per FOU
Number of FOU supported per MU		Up to 4
Number of RU supported per MU		Up to 32

Mechanical Specifications – Fiber Optic Unit

Dimensions, H x W x D		in(mm)	18.5 x 15.8 x 3.4 (470 x 400 x 87)
Weight (without bracket)	4 Port	lb(kg)	25.4 (11.5)
	8 Port	lb(kg)	27.6 (12.5)
Power Consumption (approx.)	4 Port	W	15
	8 Port	W	20
Power Supply		VDC	+28 (From Master Unit)
Enclosure Cooling			Convection
Operating Temperature		ºF (ºC)	-40 to +131 (-40 to +55)
Operating Humidity			≤ 95%
Enclosure Class			UL50E Type 4 / NEMA 4

Note: Typical specifications at room temperature

RF Specifications – System (MU and RU)

Copyright - refer to title page

MU		150MHz (VHF)	450MHz (UHF)
Passband (Downlink / Uplink)	MHz	150.05-173.4(FCC) 138-144, 148-174(IC)	406.1-420, 421-430, 450-512(FCC) 406.1-430, 450-470(IC)
Total Output Power, Uplink	dBm	30	33
Total Output Power, Downlink	dBm	30	36
Maximum System Gain	dB	95	95
Gain Adjustment Range (1dB step)	dB	30	30
Pass Band Ripple, p-p (Uplink / Downlink)	dB	3	
Uplink Noise Figure	dB	<5	
Intermodulation	dBm	FCC Compliance	FCC Compliance
Spurious	dBm	FCC Compliance	FCC Compliance
Max. RF Input Level without AGC (DL&UL)	dBm	-44	-45
Maximum RF Input Level without Damage	dBm	0	0
Maximum RF Input Level without Overdrive	dBm	-10	-10
Input VSWR		≤ 2	≤ 2
Impedance	Ω	50	50

RU		150MHz (VHF)	450MHz (UHF)
Passband (Downlink / Uplink)	MHz	150.05-173.4(FCC) 138-144, 148-174(IC)	406.1-420, 421-430, 450-512(FCC) 406.1-430, 450-470(IC)
Total Output Power, Uplink (FOU UL port)	dBm	-12	-12
Total Output Power, Downlink	dBm	30	36
Maximum System Gain, Uplink	dB	53	50
Maximum System Gain, Downlink	dB	42	48
Gain Adjustment Range (1dB step)	dB	30	30
Pass Band Ripple, p-p (Uplink / Downlink)	dB	5	
Uplink Noise Figure	dB	<5	
Intermodulation	dBm	FCC Compliance	FCC Compliance
Spurious	dBm	FCC Compliance	FCC Compliance
Maximum RF Input Level without Damage	dBm	0	0
Maximum RF Input Level without Overdrive	dBm	-10	-10
Input VSWR		≤ 2	≤ 2
Impedance	Ω	50	50

Mechanical Specification - MU

BDA/MU			
Dimensions, H x W x D		mm / in	702x650x375/27.6x25.7x14.8
Weight (without bracket)		kg / lbs	41.8/92.2
Power Supply Input		VAC	100-240V / 50-60Hz / 0-4.5A
Power Consumption		W	Full power output
	Single Band		<100
	Dual Band		<120
Enclosure Cooling			Convection
RF Connectors (N female), consider to put into knock out port			VHF DT, VHF/UHF DT, VHF/UHF MT

Copyright - refer to title page

		N-Redundancy Ports x 5, total 8
Fiber DAS Expansion Connectors (SMA)		1 x UHF/VHF DL Coupling 1 x UHF/VHF UL Coupling, total 2
Aux / Expansion Ports (SMA Connectors)		Redundancy Ports x 8
External Alarm Inputs		External alarm ports x 6
Additional Power Output		48V, 24V/28V output
LED * 10		Dry Contact Alarm LED 1 - 8, ALM/RUN
Front Door Annunciation / Buzzer		Support
Internal Buzzer		Support, Support Muting
External Annunciator Panel		AP V1, AP V3 BDA, AP V3 DAS
Communication port *2		RJ45 (LAN, OMT)
Reserved knock outs		3/4-inch hole x 1, 1/2-inch hole x 3, 1-inch hole x2 Top, side and bottom
Operating Temperature	ºC	-40 to +55
Environment Rating		NEMA 4/IP65
Operating Humidity		≤ 95%
Environmental Class		UL50E Type 4 / NEMA 4
MTBF	Hr	100,000
Certification		FCC / UL2524 / IC, Optional OSHPD Certification

Mechanical Specification – RU

DAS			
Dimensions, H x W x D		mm / in	760x400x360/30x15.75x14.2
Weight (without bracket)		kg / lbs	35/77.16
Power Supply Input		VAC	100-240V / 50-60Hz / 0-4.5A
Power Consumption		W	Full power output
	Single Band		<100
	Dual Band		<120
Enclosure Cooling			Convection
RF Connectors (N female), consider to put into knock out port			VHF DT, VHF/UHF DT, VHF/UHF MT N-Redundancy Ports x 5, total 8
Aux / Expansion Ports (SMA Connectors)			Redundancy Ports x 8
External Alarm Inputs			External alarm ports x 6
Additional Power Output			48V, 24V/28V output
LED * 10			Dry Contact Alarm LED 1 - 8, ALM/RUN
Front Door Annunciation / Buzzer			Support
Internal Buzzer			Support, Support Muting
External Annunciator Panel			AP V1, AP V3 BDA, AP V3 DAS
Communication port *2			RJ45 (LAN, OMT)
Reserved knock outs			3/4-inch hole x 1, 1/2-inch hole x 3, 1-inch hole x2 Top, side and bottom
Operating Temperature		ºC	-40 to +55
Environment Rating			NEMA 4/IP65
Operating Humidity			≤ 95%
Environmental Class			UL50E Type 4 / NEMA 4

Copyright - refer to title page

MTBF	Hr	100,000
Certification		FCC / UL2524 / IC, Optional OSHPD Certification

Copyright - refer to title page

3 INSTALLATION

3.1 WARNINGS AND ALERTS

Radio Frequency Energy
There may be situations, particularly for workplace environments near high-powered RF sources, where recommended limits for safe exposure of human beings to RF energy could be exceeded. In such cases, restrictive measures or actions may be necessary to ensure the safe use of RF energy.

High Voltage

The equipment has been designed and constructed to prevent danger, as far as reasonably practicable. Any work activity on or near equipment involving installation, operation or maintenance must be, as far as reasonable, free from danger.

Where there is a risk of damage to electrical systems involving adverse weather, extreme temperatures, wet, corrosive or dirty conditions, flammable or explosive atmospheres, the system must be suitably installed to prevent danger.

Protective Earthing

Equipment provided for the purpose of protecting individuals from electrical risk must be suitable for the purpose and properly maintained and used.

Handling Precautions

This covers a range of activities including lifting, lowering, pushing, pulling, carrying, moving, holding or restraining an object, animal or person from the equipment. It also covers activities that require the use of force or effort, such as pulling a lever, or operating power tools.

Where some of the abovementioned activities are required, the equipment must be handled with care to avoid being damaged.

Electrostatic Discharge (ESD)

Observe standard precautions for handling ESD-sensitive devices. Assume that all solid-state electronic devices are ESD-sensitive. Ensure the use of a grounded wrist strap or equivalent while working with ESD-sensitive devices. Transport, store, and handle ESD-sensitive devices in static-safe environments.

Copyright - refer to title page

3.2 SITE PLANNING CONSIDERATIONS

3.2.1 SITE PLANNING

Site Considerations

Outdoor equipment is designed to be waterproof, rainproof, and with snow protection. Temporary protection should be taken when the equipment enclosure is opened for installation or maintenance in an outdoor environment. The equipment must not be opened for installation or maintenance in bad weather (e.g. gale, storm rainfall, extreme temperatures and high humidity)

Installation Location

Mounting surface shall be capable of supporting the weight of the equipment.

In order to avoid electromagnetic interference, a proper mounting location must be selected to minimize interference from electromagnetic sources such as large electrical equipment.

Environmental

Humidity has an adverse effect on the reliability of the equipment. It is recommended to install the equipment in locations having stable temperature and unrestricted air-flow.

The installation location for the product should be well ventilated. The equipment has been designed to operate at the temperature range and humidity level as stated in the product specifications in the datasheet.

Direct sun light exposure to the equipment should be avoided. Provide additional shelter if necessary.

Power Supply

The power supply unit (PSU) provides power to all modules within the equipment. Depending on the product variant, it is recommended that the PSU be operated on a dedicated circuit breaker or fused circuit.

Grounding Requirement

Verify that the equipment has been well grounded. This includes antennas and all cables connected to the system. Ensure lightning protection for the antennas is properly grounded.

Cable Routing

Depending on equipment configuration, a variety of types of cables are required. Where applicable, ensure cables are properly routed and secured so that they are not damaged.

Manual Handling

During transportation and installation, take necessary handling precautions to avoid potential physical injury to the installation personnel and the equipment.

Copyright - refer to title page

3.2.2 INSTALLATION CHECKLIST

- Working space available for installation and maintenance for each mounting arrangement. Ensure unrestricted airflow.
- Ensure earth ground point is within reach of the ground wire.
- Ensure a power source is within reach of the power cord and the power source has sufficient capacity.
- Where appropriate, ensure unused RF connectors are terminated.
- Do not locate the equipment near large transformers or motors that may cause electromagnetic interference.
- Reduce signal loss in feeder cable by minimizing the length and number of RF connections.
- Ensure VSWR of antennas system < 1.5:1.
- Ensure equipment will be operated within the stated environment (see datasheet)
- Observe handling of all cables to prevent damage.
- Donor antenna should have a narrow beamwidth and positioned in line-of-sight (LOS) to the donor BTS site so that the donor signal level is maximized. This allows the use of minimum gain to achieve the maximum DL output power. The UL gain is typically set lower than or equal to the DL gain to minimize noise interference to the donor BTS
- Service antennas should be selected based on the type of service area, e.g., indoor antenna for indoor applications, and panel antenna for outdoor applications.

Copyright - refer to title page

3.3 INSTALLATION PROCEDURES

3.3.1 GOODS INWARDS INSPECTION

- Verify the number of packages received against the packing list.
- Check all packages for external damage; report any external damage to the shipping courier. If there is damage, a shipping agent should be present before unpacking and inspecting the contents because damage during transit is the responsibility of the agent.
- Open and check each package against the packing list. If any items are missing, contact Comba.
- Do not remove items from anti-static packing until ready for installation. If damage is discovered at the time of installation, contact the shipping agent.

3.3.2 TOOLS

See Appendix A for a full list of the recommended tools required for installation and routine maintenance.

3.3.3 PREPARATION

- Wall mounting with the masonry bolts supplied, which make use of the outer holes.

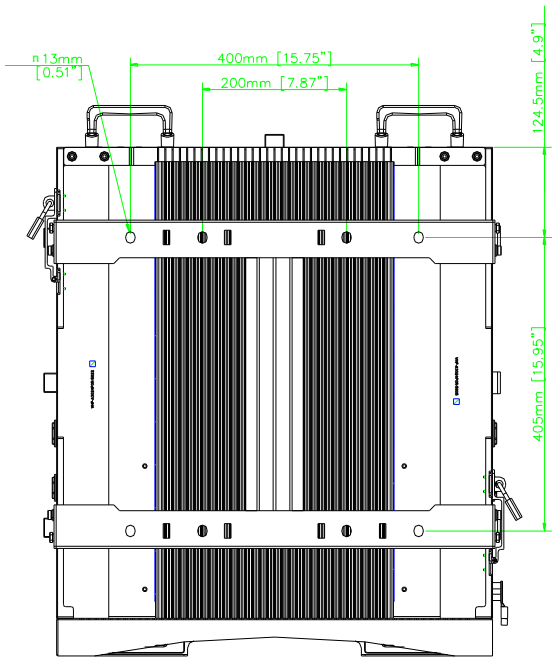

Figure 11: Mounting Rack Overview-MU

Copyright - refer to title page

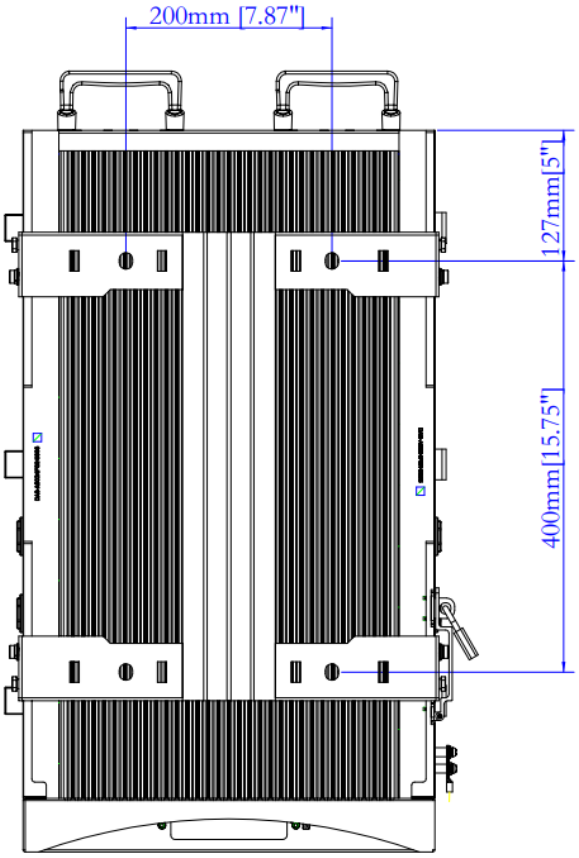

Figure 12: Mounting Rack Overview-RU

3.3.4 WALL MOUNTING FOR MU AND RU

- Drill four holes on the wall using the position of four holes on the mounting rack as a guide. Fix the mounting rack to the wall using four masonry bolts (M10x110mm).
- Install the Mounting Rack to the wall.
- Hang the equipment and secure the enclosure to the mounting rack.
- Fixed the enclosure using six M8 x 20 screws.

Copyright - refer to title page

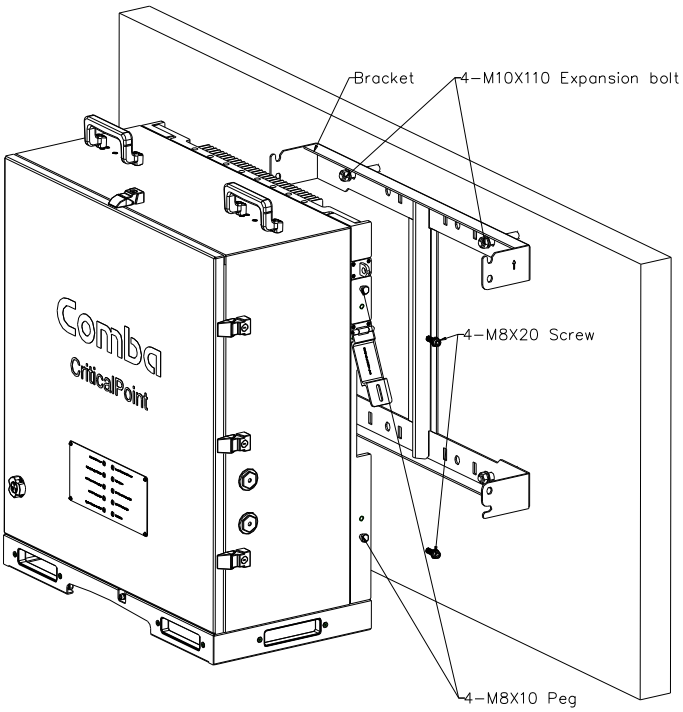

Figure 13: PS V+UHF DAS (MU and RU) Wall Mounting

3.3.5 DRIP-LOOP

Comba recommends that every horizontal cable entry to the equipment forms a 'U' before its entry to the equipment. Water on the cable will drip down at the bottom of the loop and will not accumulate at the equipment connectors.

3.3.6 CABINET MOUNTING FOR EU

Installation dimensions of Expansion Unit for cabinet mounting is shown as below:

Copyright - refer to title page

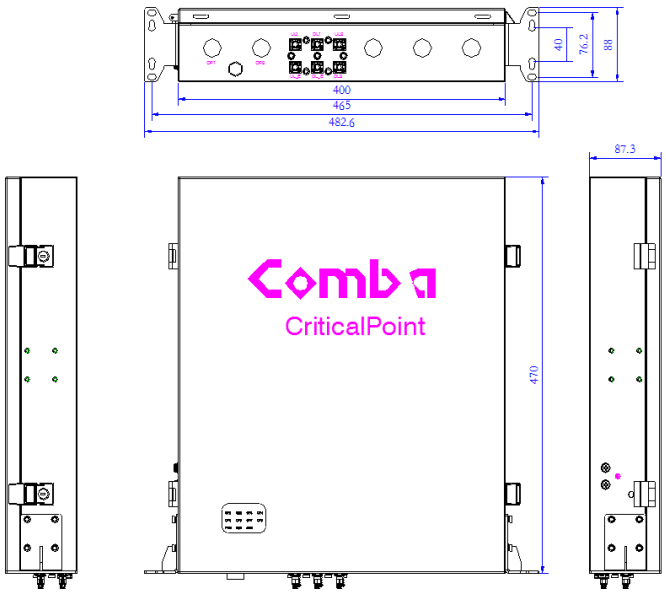

Figure 14: Dimension of Expansion Unit for Cabinet Mounting

Cabinet installation:

The installation cabinet is a standard cabinet. The size of the Expansion Unit is the equipment used in the 2U cabinet. The cabinet needs to have enough space to install the 2U cabinet, and have self-prepared structural parts with pallets and M6 buckle nuts.

The installation steps are as follows:

- Adjust the 2U space on the upper side of the free pallet of the cabinet, install the square holes on the left and right columns, and install M6 snap nuts in the four holes with a spacing of 76.2mm;
- Complete the external wiring connection of the equipment according to the equipment port and wiring requirements;
- Push the equipment into the cabinet along the pallet, align the mounting ear mounting holes of the equipment with the corresponding square holes of the cabinet [with M6 nuts], and use a "cross screwdriver" to set the " M6" in the packing box of the equipment ×10, "Combination screw (T)" passes through the hanging ears and fastens to the "M6 snap nut";
- Use the yellow-green ground wire in the accessories to reliably connect the equipment ground terminal and the ground bar of the machine room;
- The installation is complete.

Copyright - refer to title page

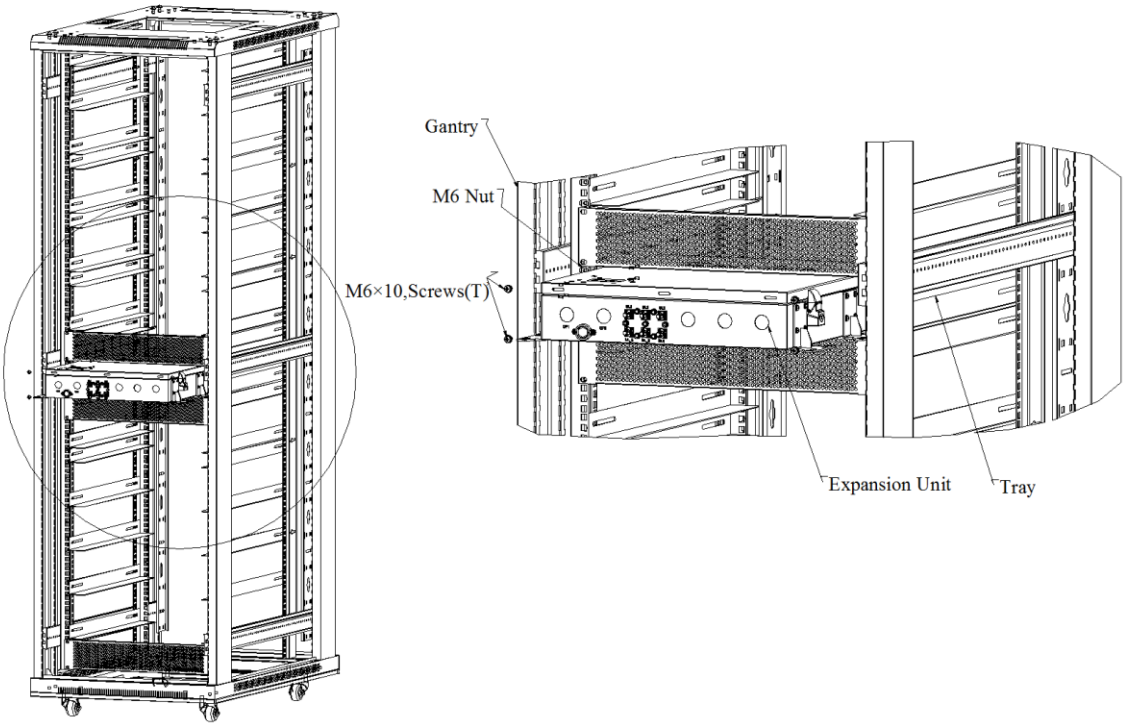

Figure 15: Expansion Unit Cabinet Mounting

3.3.7 WALL MOUNTING FOR EU

Installation dimensions of Expansion Unit for wall mounting is shown as below:

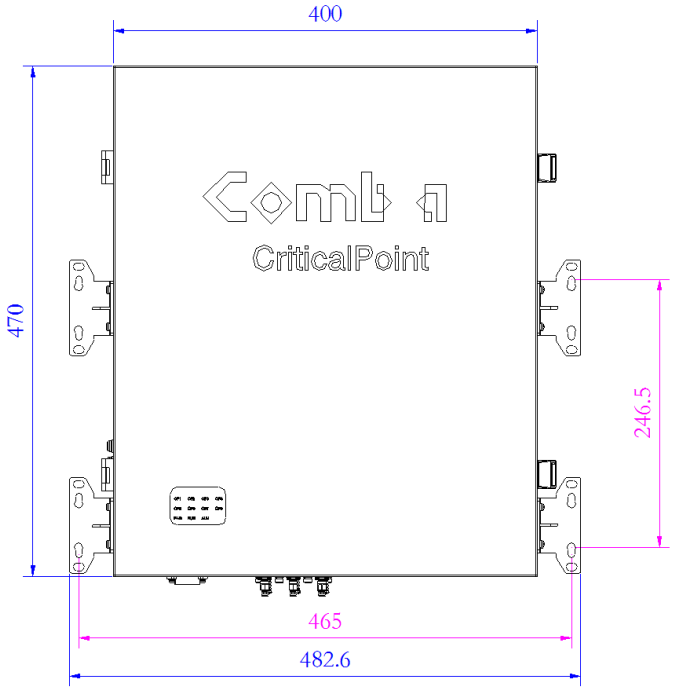

Figure 16: Expansion Unit Wall Mounting

The wall-mounted installation steps are as follows:

- Remove the two mounting hangers from the Expansion Unit, adjust the direction according to Figure 9, and install it on the Expansion Unit. At the same time, install the remaining two mounting hangers attached in packing box on the Expansion Unit, as shown in Figure 17;

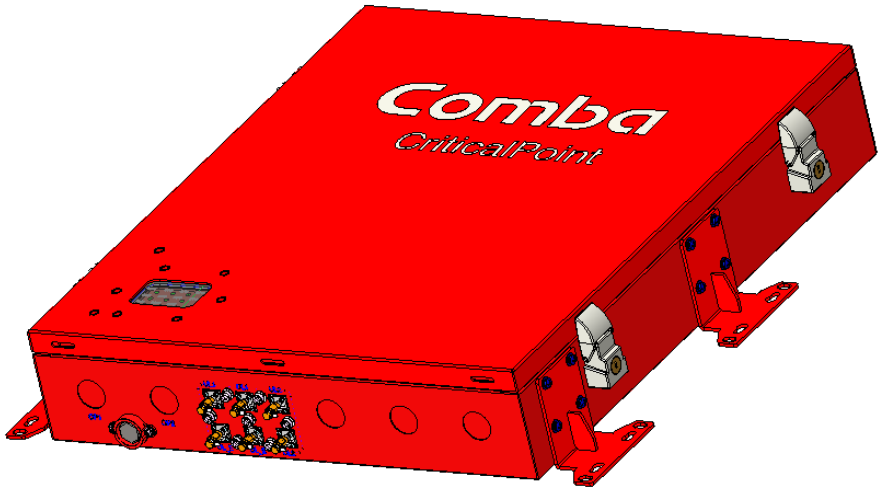

Figure 17: The mounting hangers of Expansion Unit

- On the selected wall, use a percussion drill and choose a suitable drill bit [φ8mm is recommended] to make a hole according to the size [465*246.5mm] in Figure 18, and the depth is about 50mm;

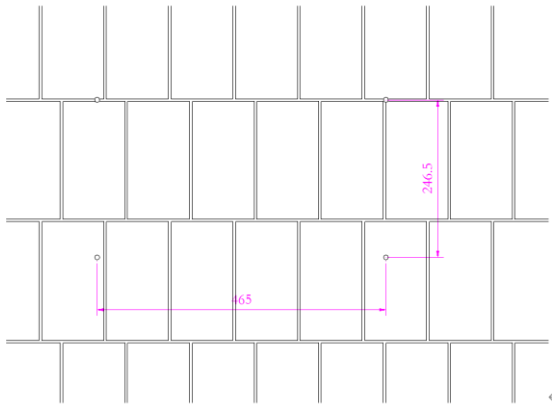

Figure 18: Hole punching diagram for Wall-mounted installation

- Remove the nut and washer of "M6×60, expansion bolt", insert the bolt and sleeve into the hole of the wall [the threaded end faces outward]; then hang the device on the bolt, and then pad it Use a wrench to tighten the screws for flat pads and spring pads, as shown in Figure 19;

Copyright - refer to title page

- Use the yellow-green ground wire in the accessories to reliably connect the equipment ground terminal and the ground bar of the machine room;
- The installation is complete.

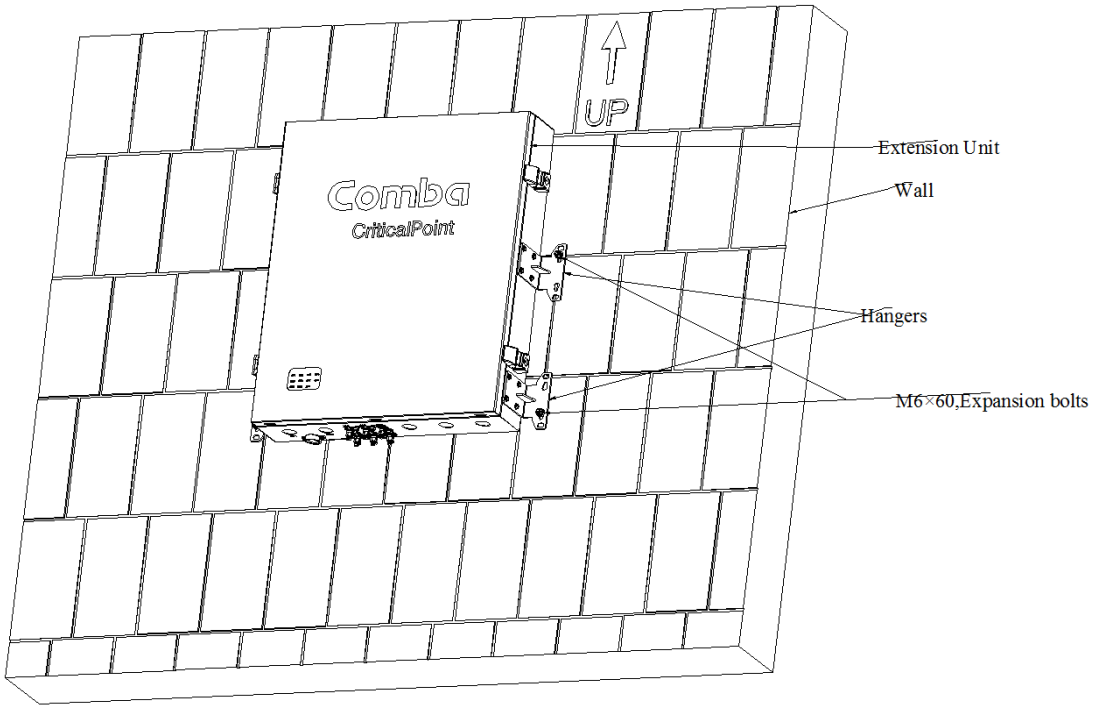

Figure 19: Expansion Unit Wall Mounting

Copyright - refer to title page

3.3.8 GROUNDING

Ground Connection

To ensure safe operation of the product, a ground (earth) connection is required. For single phase AC power source, the product must be grounded by connecting the "earth wire" of the power cord to the ground terminal of the AC supply. For operating this product with DC power systems (such as rectifiers), the product should not be connected to power systems that switch open the return lead because the return lead could function as the ground (earth) connection for the equipment.

Protective Ground Connection

The enclosure must be grounded securely by connecting a copper wire (CSA 16mm^2) to the grounding terminal on the equipment/rack, and the other end to a protective ground (i.e. building earth point). An internationally acceptable color code of the ground connection wire is green/yellow.

Such a ground connection implements the "Protective Ground Connection", and must be connected to the equipment at the designated ground point. In general, do not connect the supply before establishing an adequate ground (earth) connection.

Construct the ground wire, and use appropriate crimp connectors where necessary. Locate and connect the equipment grounding terminal to a protective ground (i.e. building earth point).

3.3.9 AC/DC POWER CONNECTION FOR MU

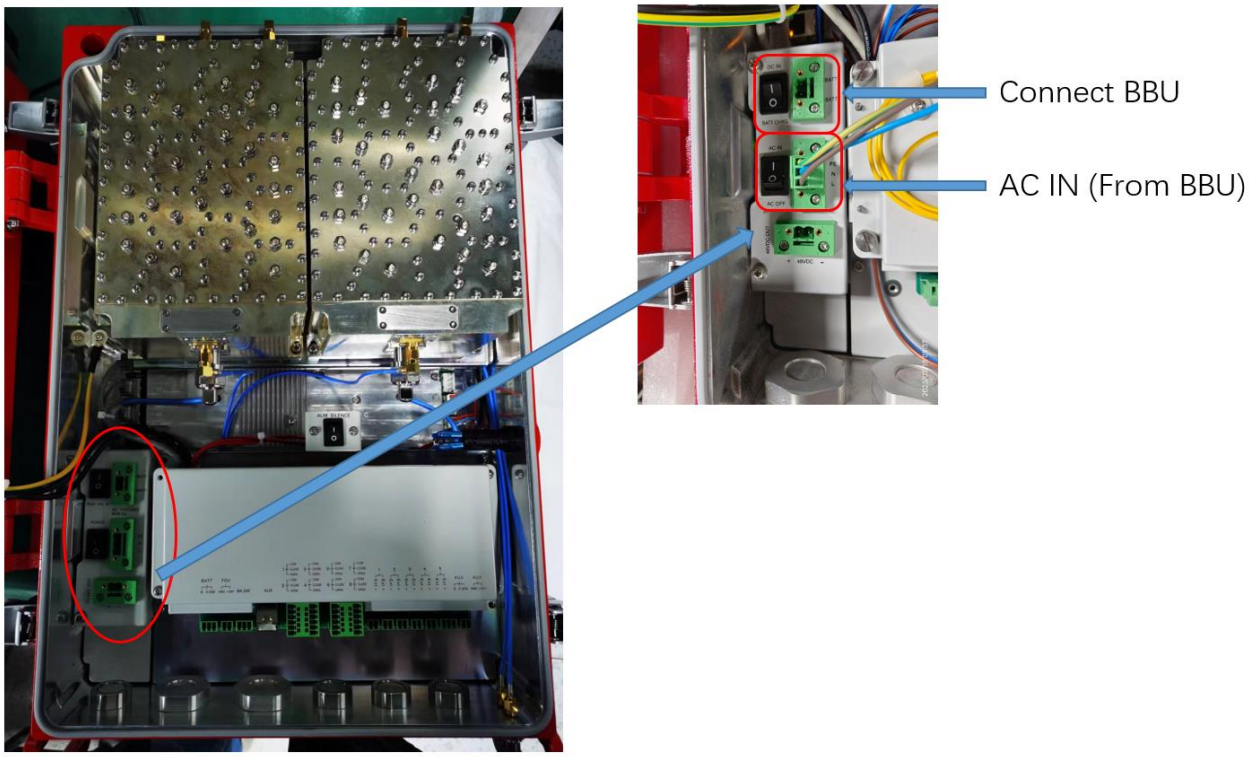

Figure 20: AC/DC power connection for MU

- BATT- of MU connect BATT- of BBU

Copyright - refer to title page

- BATT+ of MU connect BATT+ of BBU
- AC IN port (PE, N, L) Connect AC OUTPUT port (PE, N, L)

3.3.10 AC/DC POWER AND MONITOR CABLE CONNECTION BETWEEN MU AND EU

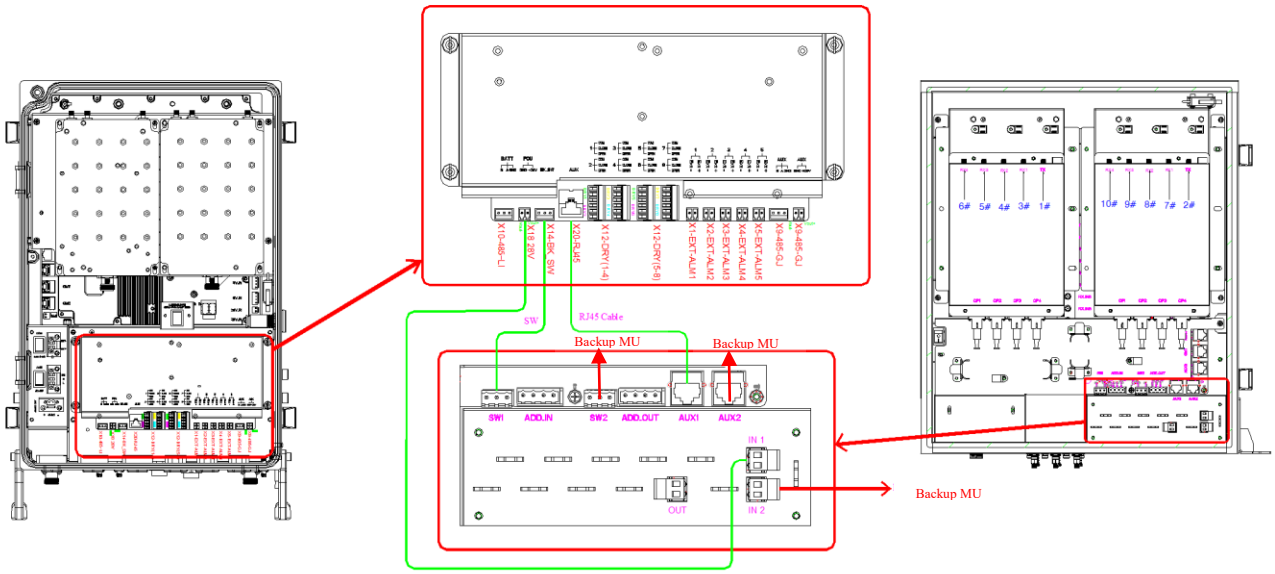

Figure 21: DC power and Monitor cable connection for EU

- The power supply of the Expansion Unit is DC24V-DC48V, which can be directly supplied by the MU or DC48V independently. When powered by the MU, the FOU port of Main MU provides the DC power to EU: +28V→IN1+, GND→IN1-;
- Switch Cable connection: Main MU→EU: SW→SW1;
  Backup MU: SW→SW2;
- RJ45 Cable connection: Main MU→EU: AUX→AUX1; Backup MU→EU: AUX→AUX2.

Copyright - refer to title page

3.3.11 DC POWER AND MONITOR CABLE CONNECTION BETWEEN EU AND EU

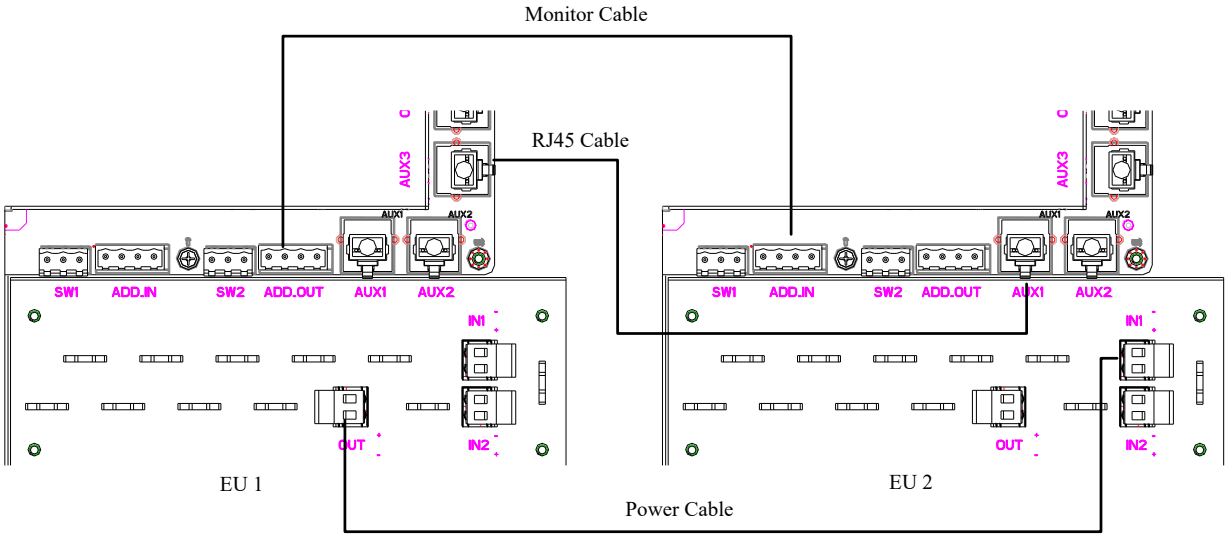

Figure 22: DC power and Monitor cable connection for EU

- Power Cable(EU1 to EU2)：OUT+→IN1+，OUT-→IN1-；
- Monitor Cable(EU1 to EU2)：ADD_OUT→ADD_IN；
- RJ45 Cable(EU1 to EU2)：AUX3→AUX1。

3.3.12 RF CABLE CONNECTION

PS V+UHF DAS RF cables connection is as follows:

- PS V+UHF DAS MU DT/DL IN port → Connects to the feeder cable from the donor antenna.
- PS V+UHF DAS MU MT/DL OUT port → Connects to the feeder cable from the service antenna infrastructure.
- PS V+UHF DAS MU IN1/OUT1 ports → Connects to UL1/DL1 or UL2/DL2 of EU
- PS V+UHF DAS RU MT port → Connects to the feeder cable from the service antenna infrastructure.

3.3.13 WEB ACCESS

Connect ‘OMT’ or ‘LAN’ using regular Ethernet cable, then use the correct IP address in the browser to access to the WEB GUI

3.3.14 DRY CONTACT CABLE

Below please find the pin definitions of Dry Contact Cables.

Table 4: Pin Definition of Dry Contact Cable

Pin NO.	Pin	Input
ALM1		

1	CLOSE1	1
2	COM1	2
3	OPEN1	3
4	CLOSE2	4
5	COM2	5
6	OPEN2	6
7	CLOSE3	7
8	COM3	8
9	OPEN3	9
ALM2		
1	CLOSE4	1
2	COM4	2
3	OPEN4	3
4	CLOSE5	4
5	COM5	5
6	OPEN5	6
7	CLOSE5	7
8	COM5	8
9	OPEN5	9
AUX		
1	EXT ALM1	1
2	EXT ALM2	2
3	EXT ALM3	3
4	EXT ALM4	4
5	GND	5
6	GND	6
7	GND	7
8	GND	8
9	NC	9

Dry contact status:

Main Power Normal/Lost dry contact status:

Copyright - refer to title page

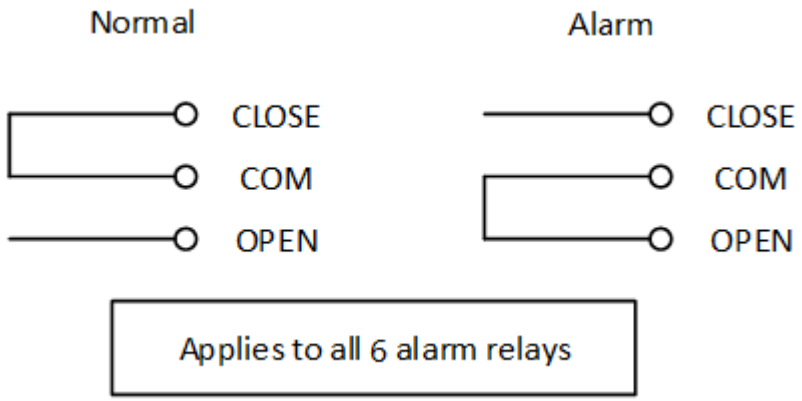

Pin definition of ALM and AUX connectors:

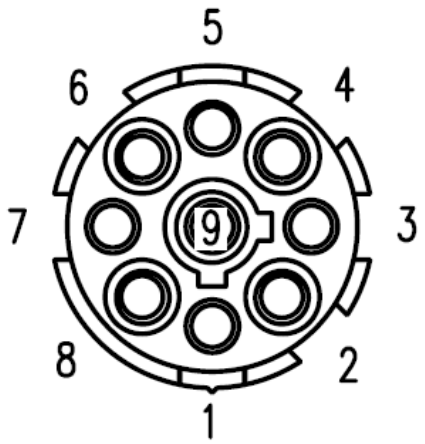

End of Section

Copyright - refer to title page

4 WEB GUI

The PS V+UHF DAS can be monitored and controlled via the WEB GUI; use the following guide to finish system parameter setting and commissioning.

4.1 WEB GUI CONNECTION

Step 1: Connect the OMT port to the PC RJ45 port OF MU with the supplied RJ45 cable to set up a physical connection.

Step 2: Open a browser (suggested is the Firefox browser, display resolution is 1024×768), input Web GUI **IP address: https://192.168.8.101**, click [Enter].

NOTE: DHCP and DNS are also available to login to the Web GUI.

Figure 23: Input IP Address

Step 3: Input **User Name: admin; Password** (default password: **admin**). Click [Log in].

Figure 24: Input User Name and Password

Copyright - refer to title page

4.2 WEB GUI INTRODUCTION

After log in, the Web GUI main screen will appear.

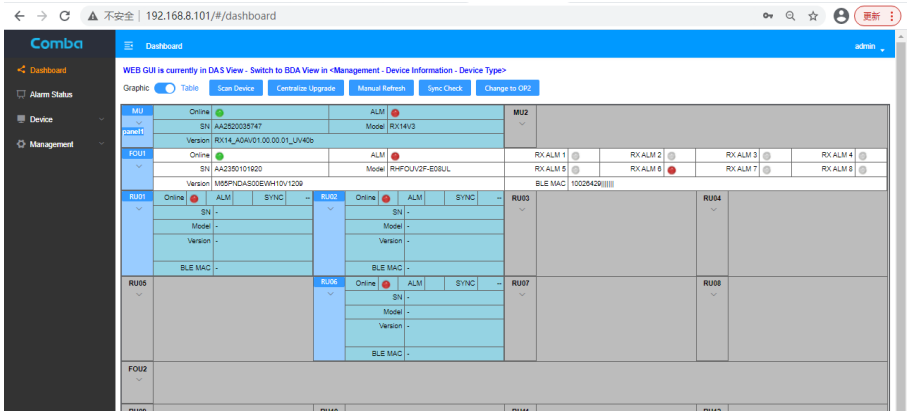

Figure 25: Web GUI Main Screen

On Comba Web GUI Home Screen, there are four Menu bars:
[Dashboard], [Alarm Status], [Device]and [Management].

The [Dashboard] Screen shows system topology diagram.

Dashboard Screen

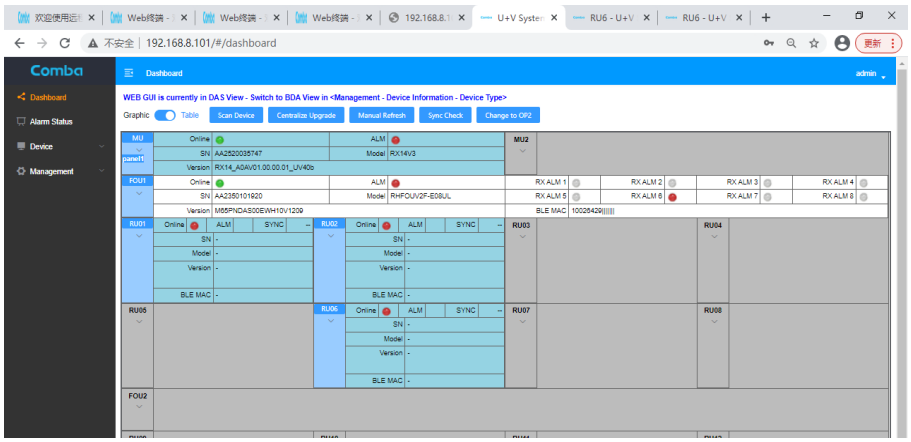

Figure 26: Dashboard Screen

The [Device] shows Isolation Check, Overview, Sub Band VHF, Sub Band UHF, Site & Channels, and Batch Setting, etc.

Overview Screenshot

The page shows RF Switches, P_in power, P_out power and multi THs, etc.

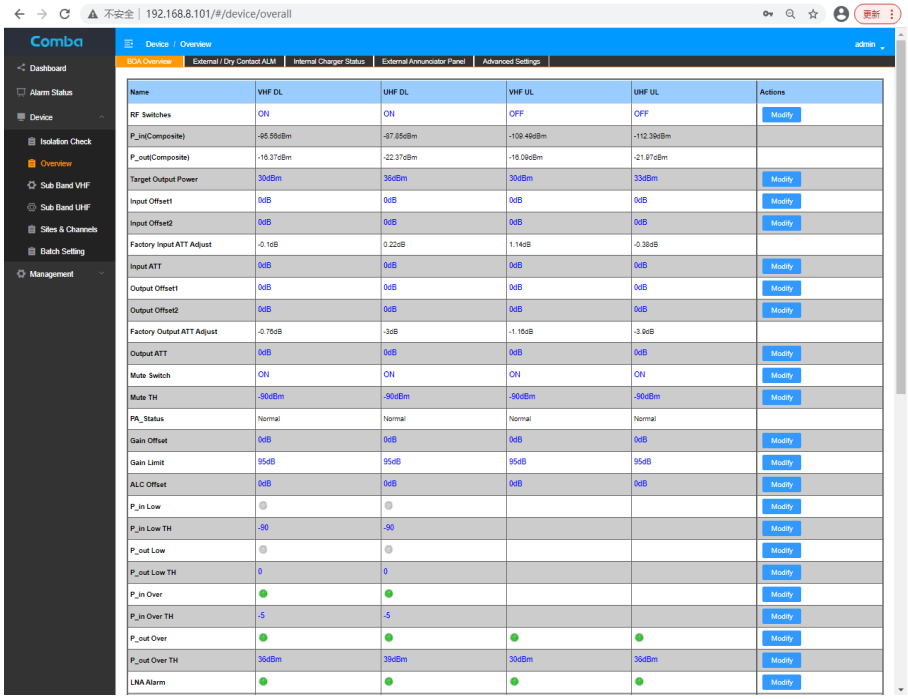

Name	VHF DL	UHF DL	VHF UL	UHF UL	Actions
RF Switches	ON	ON	OFF	OFF	Modify
P_in(Composite)	-95.59dBm	-87.85dBm	-109.49dBm	-112.39dBm	
P_out(Composite)	-16.37dBm	-22.37dBm	-16.09dBm	-21.97dBm	
Target Output Power	30dBm	36dBm	30dBm	33dBm	Modify
Input Offset1	0dB	0dB	0dB	0dB	Modify
Input Offset2	0dB	0dB	0dB	0dB	Modify
Factory Input ATT Adjust	-0.1dB	0.22dB	1.14dB	-0.38dB	
Input ATT	0dB	0dB	0dB	0dB	Modify
Output Offset1	0dB	0dB	0dB	0dB	Modify
Output Offset2	0dB	0dB	0dB	0dB	Modify
Factory Output ATT Adjust	-0.76dB	-3dB	-1.16dB	-3.9dB	
Output ATT	0dB	0dB	0dB	0dB	Modify
Mute Switch	ON	ON	ON	ON	Modify
Mute TH	-90dBm	-90dBm	-90dBm	-90dBm	Modify
PA_Status	Normal	Normal	Normal	Normal	
Gain Offset	0dB	0dB	0dB	0dB	Modify
Gain Limit	95dB	95dB	95dB	95dB	Modify
ALC Offset	0dB	0dB	0dB	0dB	Modify
P_in Low					Modify
P_in Low TH	-90	-90			Modify
P_out Low					Modify
P_out Low TH	0	0			Modify
P_in Over					Modify
P_in Over TH	-5	-5			Modify
P_out Over					Modify
P_out Over TH	36dBm	39dBm	30dBm	36dBm	Modify
LNA Alarm					Modify

Figure 27: Chanel Frequency Info

The page shows Sub Band Information.

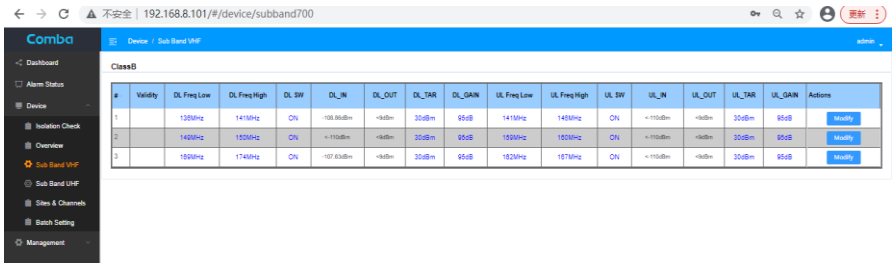

#	Validity	DL Freq Low	DL Freq High	DL SW	DL_IN	DL_OUT	DL_TAR	DL_GAIN	UL Freq Low	UL Freq High	UL SW	UL_IN	UL_OUT	UL_TAR	UL_GAIN	Actions
1		135MHz	141MHz	ON	-108.86dBm	<9dBm	30dBm	95dB	141MHz	145MHz	ON	<-110dBm	<9dBm	30dBm	95dB	Modify
2		149MHz	150MHz	ON	<-110dBm	<9dBm	30dBm	95dB	159MHz	160MHz	ON	<-110dBm	<9dBm	30dBm	95dB	Modify
3		169MHz	174MHz	ON	-107.63dBm	<9dBm	30dBm	95dB	182MHz	187MHz	ON	<-110dBm	<9dBm	30dBm	95dB	Modify

Figure 28: Sub Band Info

End of Section

Copyright - refer to title page

5 COMMISSIONING

5.1 PRE-COMMISSIONING TASKS

After equipment installation, perform the following steps before equipment powering and commissioning:

- Prepare the channel frequencies.
- Verify that the expected voltage, current and power levels do not violate any ratings.
- Visually inspect the power connection within the equipment. Ensure that the power cable is correctly and securely connected, including the grounding wire, RF cable and other cables.
- Check the grounding connection and verify that the ground resistance is less than 5Ω.
- Test the antenna system and ensure that the echo loss within working frequencies is less than -14dB (VSWR<1.5).

5.2 COMMISSIONING PROCEDURE

Perform the following procedures for system commissioning.

Table 5: Commissioning Task Explanation

Commissioning Tasks	Observation
1. Set filter frequencies	In Master Unit – Device page or on each individual units' page ● Update the frequency for each filter in the device page
2. Go through commissioning process	In Master Unit – Commissioning page ● Scan system elements ● Update units' information ● Isolation test ● Uplink Calibration ● Downlink Calibration
3. Turn on VHF/UHF switches, turn on filter switches	In Master Unit – Device page or on each individual units' page ● Turn on the switches for VHF/UHF and switches for each filter
4. Determine system downlink gain and uplink gain for each filter	In Master Unit – Device page ● Determine and set the downlink or uplink gain based on the downlink input power / the link budget calculation or the design
5. Fine tuning the gain	In each individual units' page ● You must fine tune the gain individually on each unit
6. Alarm Setting Review	In Master Unit – Management page or on each individual units' page ● Review the alarm setting for Donor Antenna monitoring, and for dry contact alarms

Copyright - refer to title page

End of Section

6 MAINTENANCE

The PS V+UHF DAS is designed for trouble-free operation and generally does not need maintenance. Maintenance activities should only be carried out by trained personnel.

Periodic inspection of the PS V+UHF DAS equipment(s) is recommended - the recommended tasks include:

- Verify the direction and position of antennas. Re-align if necessary.
- Make sure the cable connector and sealing on the RF cable connectors are not damaged.
- Verify lightning and grounding protection is in good condition.

End of Section

Copyright - refer to title page

7 APPENDICES

7.1 APPENDIX A: TOOLS

The following are the recommended list of tools for new installation and routine maintenance.

- Slotted Screwdriver
- Philips Screwdriver
- Ring Spanner (Assorted size: 12~20mm)
- Electrically operated drill and masonry drill bits ∅12mm
- Anti-static Wrist Strap
- Side Cutter
- Frequency Counter (e.g. FLUKE PM6685R)
- RF Power Meter (e.g. Bird 5000)

Copyright - refer to title page

7.2 APPENDIX B: DECLARATION OF HARMFUL SUBSTANCES AND CONTENT

Product Name: Public Safety DAS System

Harmful substance and content of this product as below table shown:

Part Name	Harmful Substance					
	Pb	Hg	Cd	Cr (VI)	PBB	PBDE
A	×	○	○	○	○	○
B	×	○	○	○	○	○

Note: Above table complies with SJ/T 11364.

○: Indicates that the harmful substance content in all homogeneous materials for corresponding part is under the limited requirement of GB/T 26572.

×: Indicates that the harmful substance content in at least one single homogeneous material for the corresponding part exceeds the limited requirement of GB/T 26572.

Remark: The content of the parts marked with "×"above exceeds the requirement as there is still no mature alternative technologies to achieve the replacement of poisonous and harmful materials or elements.

Copyright - refer to title page

7.3 APPENDIX D: RMA (RETURN MATERIAL AUTHORIZATION)

RMA (RETURN MATERIAL AUTHORIZATION) REQUEST FORM

Comba Telecom Inc.
568 Gibraltar Drive, Milpitas, CA 95035, USA
Tel : 1-408-526-0180 Fax : 1-408-526-0181

Date :_____

From : _____
Address: _____
_____
Tel: Fax: _____
Emai : _____
ATTN: _____

Product Information:

Item	Model	Serial Number	Qty	Problem Description
1				
2				
3				
4				
5				
6				
7				
8				

RMA and Transfortation Information:

RMA# :_____

Location of Product :_____

Transportation Method :_____

Shipping Forwarder :_____

Printed Name :_____

Signature :_____

For Comba Use (only)
Recommended Action :

Approved by:

Printed Name:_____

Signature:_____ **Date:**_____

Copyright - refer to title page

Comba

Comba Telecom Inc.

568 Gibraltar Drive, Milpitas, CA 95035, USA
Tel: +1 866 802 7961
Fax: +1 408 526 0181
Email: customer.nam@comba-telecom.com

www.combausa.com