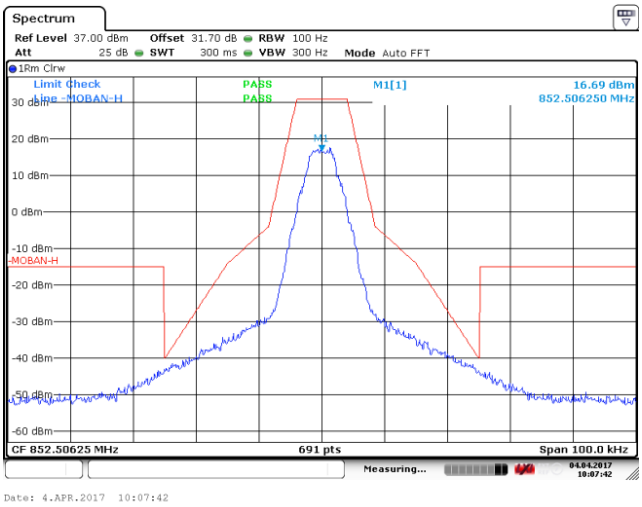

Mid Frequency: 852.50625MHz (Mask H)

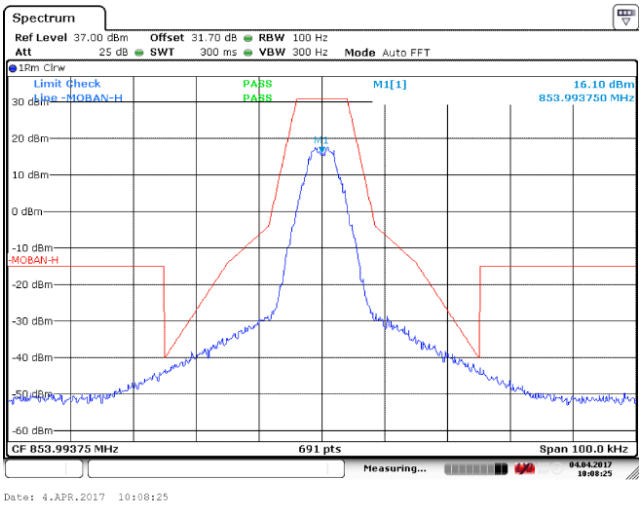

High Frequency: 853.99375MHz (Mask H)

(2) Uplink

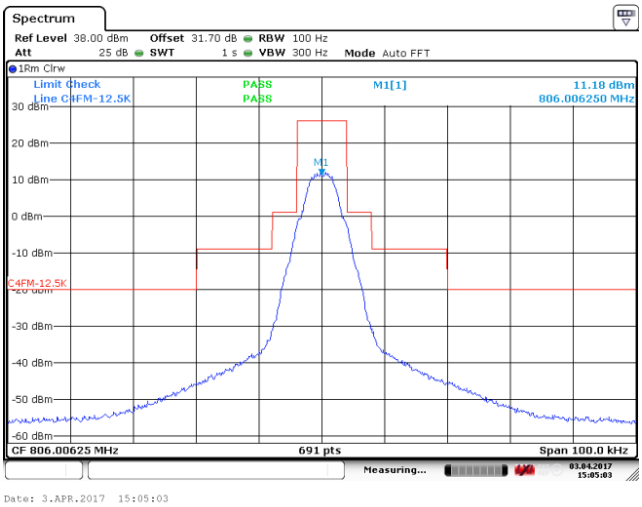

Low Frequency: 806.00625MHz(Mask B)

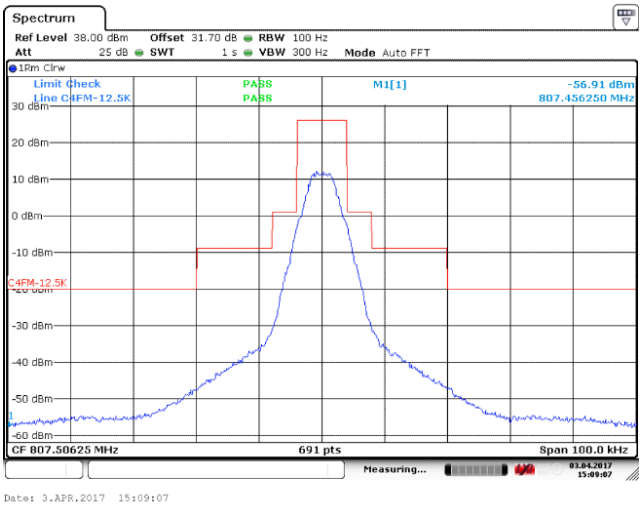

Mid Frequency: 807.50625MHz(Mask B)

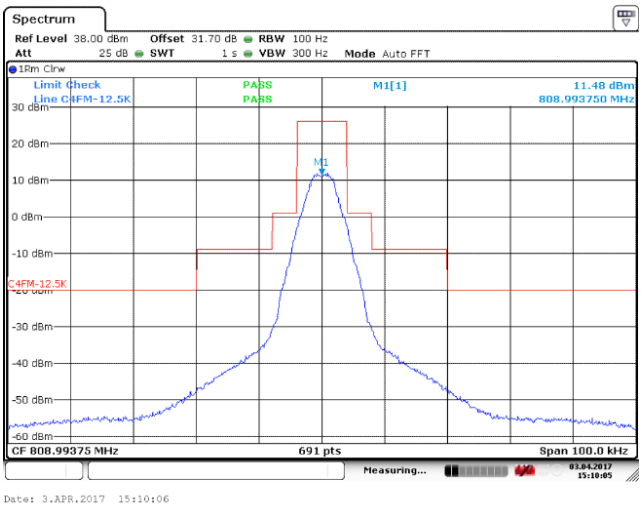

High Frequency: 808.99375MHz(Mask B)

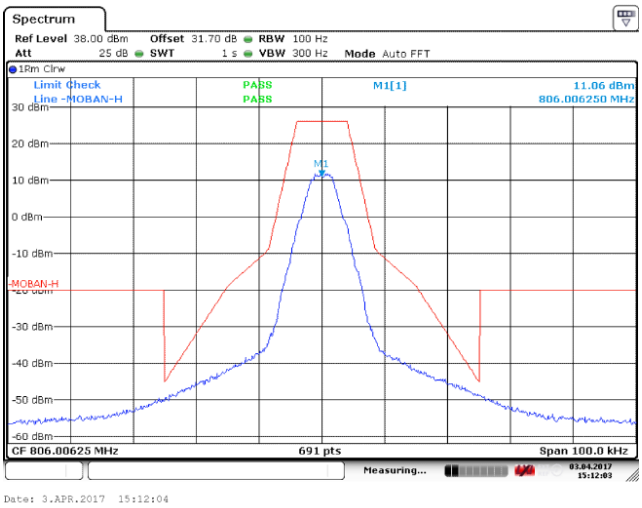

Low Frequency: 806.00625MHz (Mask H)

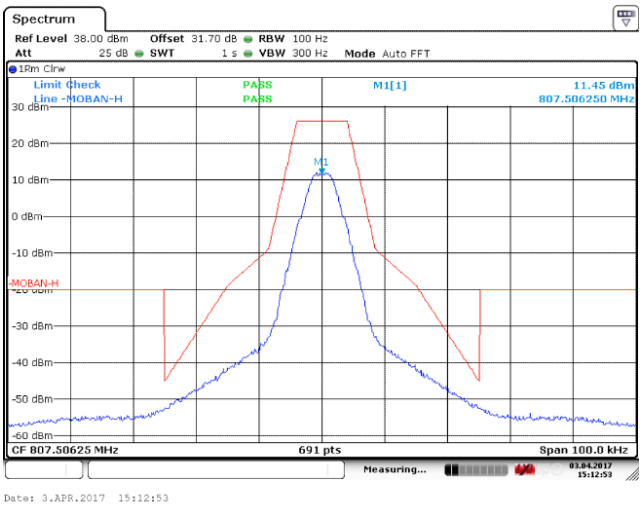

Mid Frequency: 807.50625MHz (Mask H)

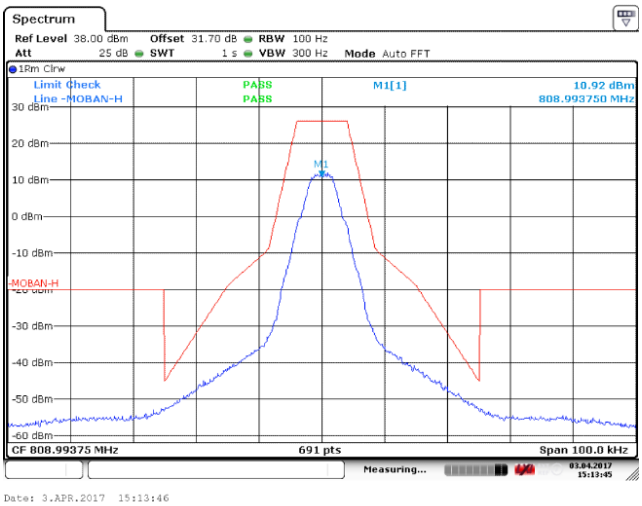

High Frequency: 808.99375MHz (Mask H)

6.3.5.2.2 Modulation signal: Tetra

(1) Downlink

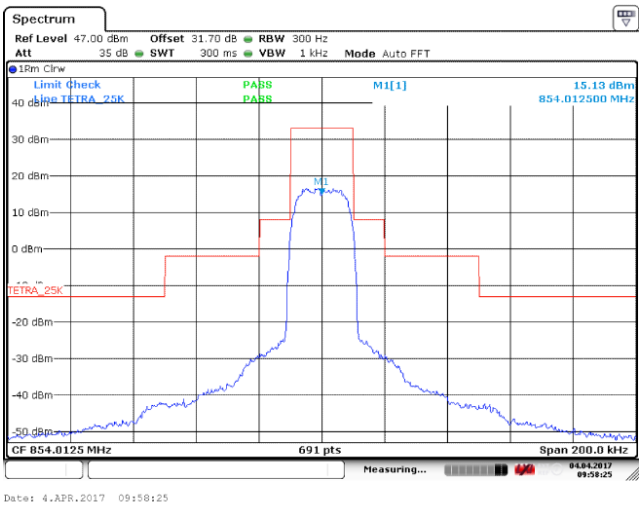

Low Frequency: 854.0125MHz (Mask B)

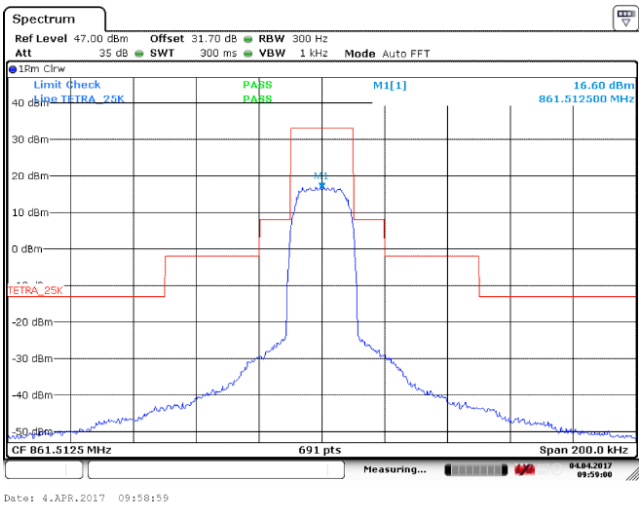

Mid Frequency: 861.5125MHz (Mask B)

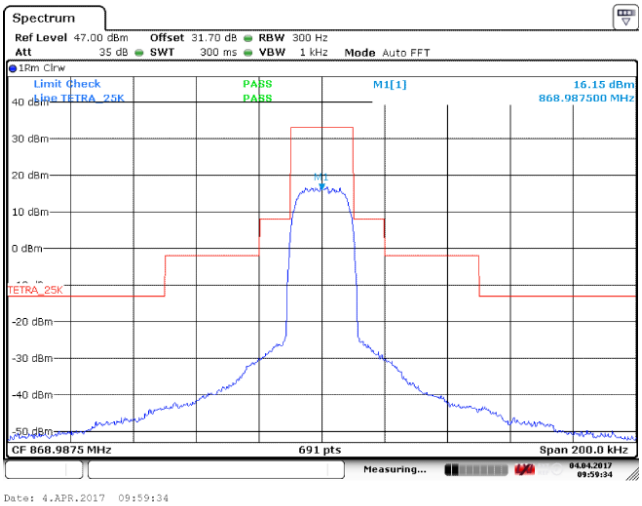

High Frequency: 868.9875MHz (Mask B)

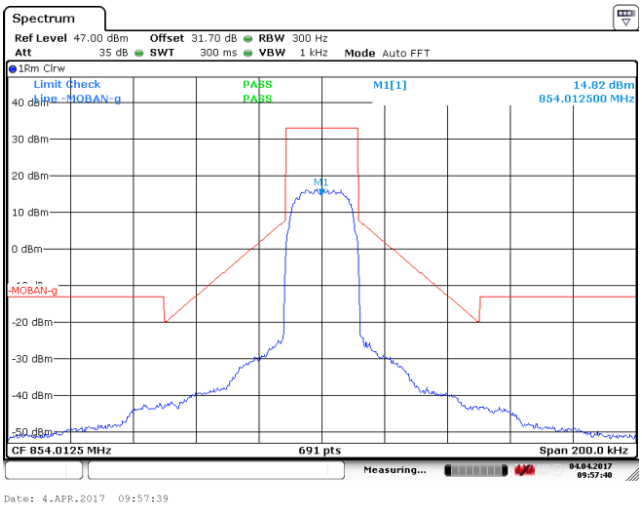

Low Frequency: 854.0125MHz (Mask G)

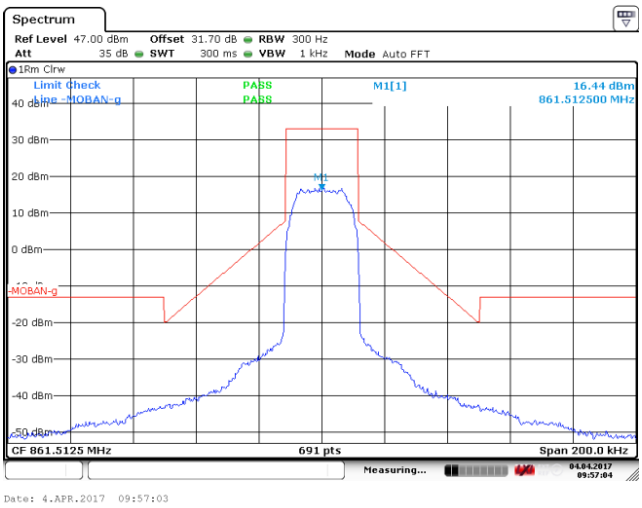

Mid Frequency: 861.5125MHz (Mask G)

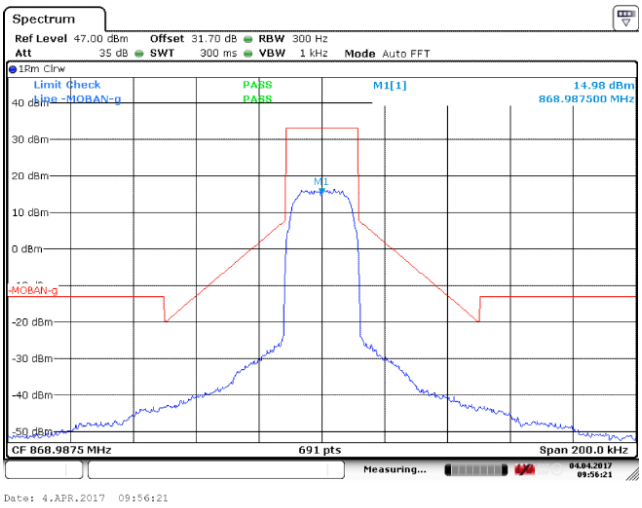

High Frequency: 868.9875MHz (Mask G)

(2) Uplink

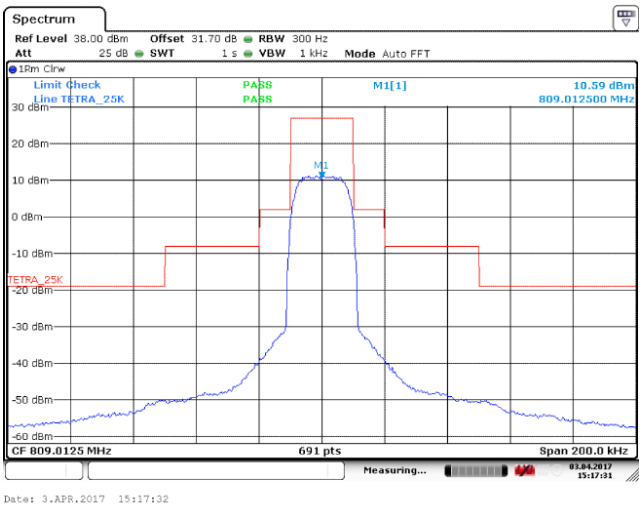

Low Frequency: 809.0125MHz (Mask B)

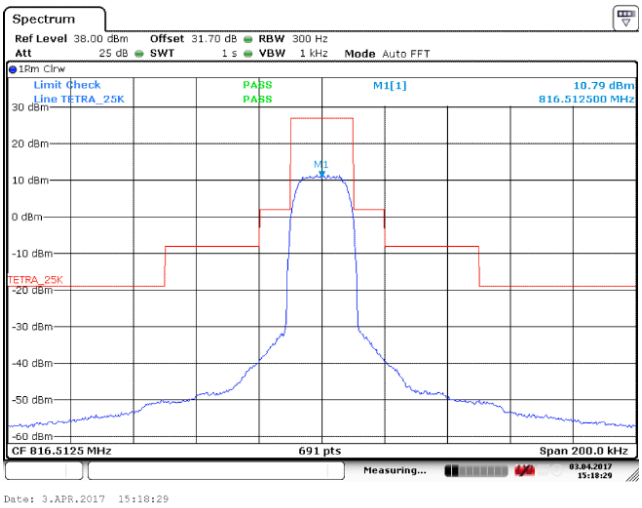

Mid Frequency: 816.5125MHz (Mask B)

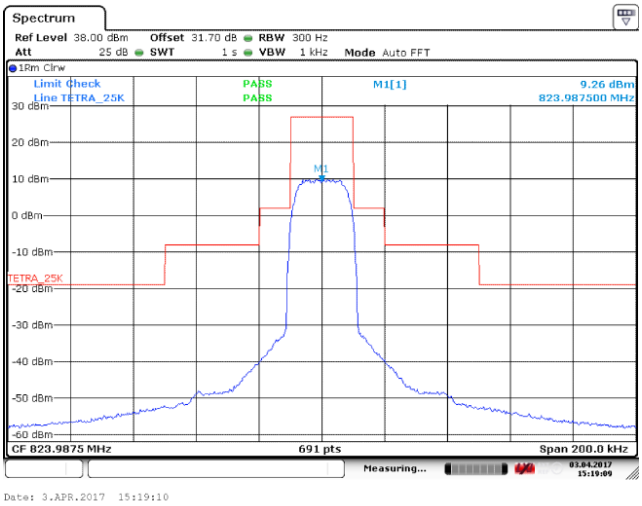

High Frequency: 823.9875MHz (Mask B)

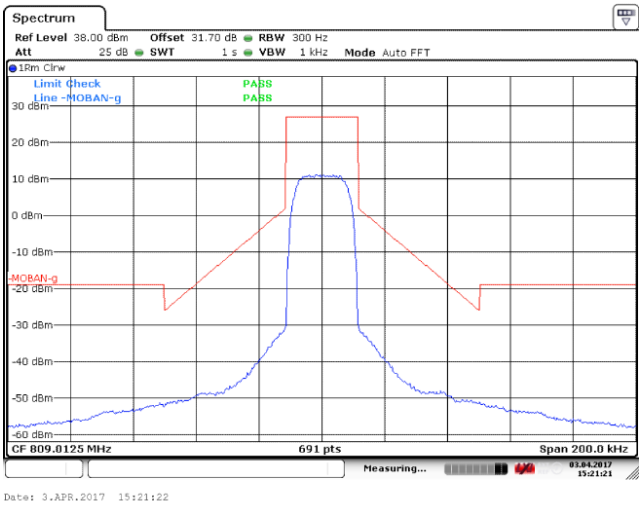

Low Frequency: 809.0125MHz (Mask G)

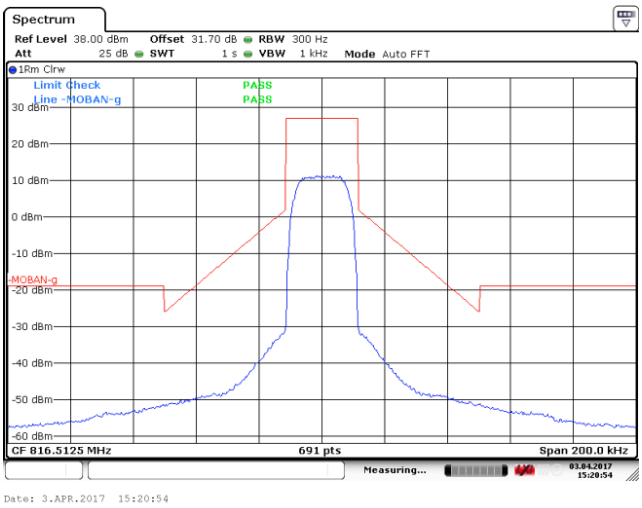

Mid Frequency: 816.5125MHz (Mask G)

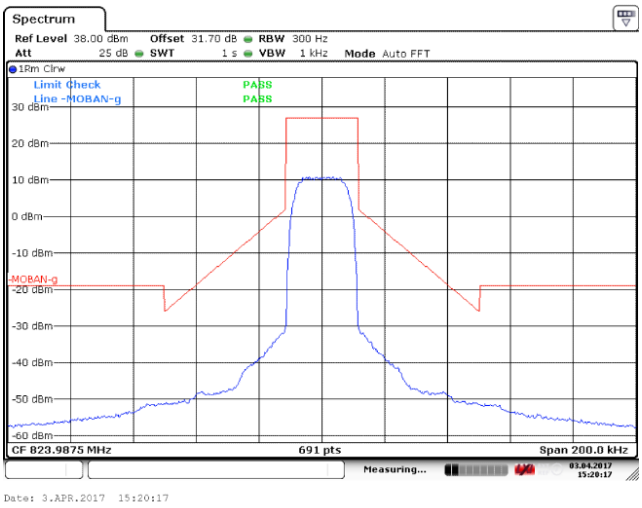

High Frequency: 823.9875MHz (Mask G)

6.3.5.2.3 Modulation signal: Analog FM(10kHz/1kHz)

(1) Downlink

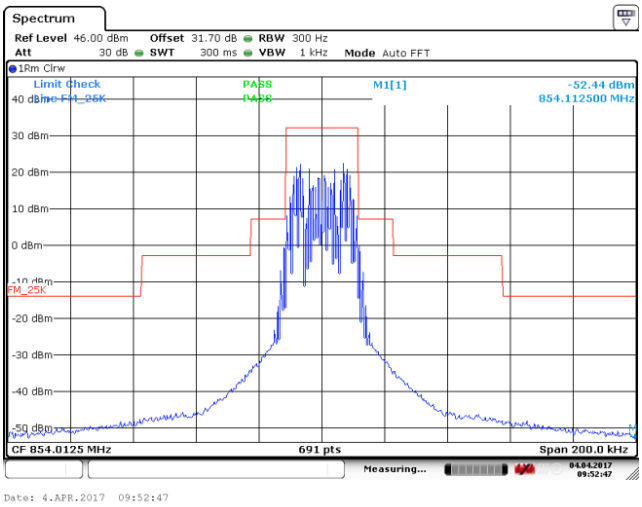

Low Frequency: 854.0125MHz (Mask B)

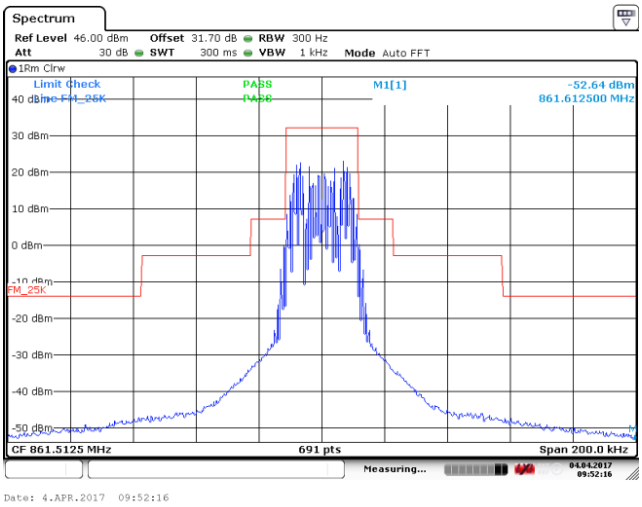

Mid Frequency: 861.5125MHz (Mask B)

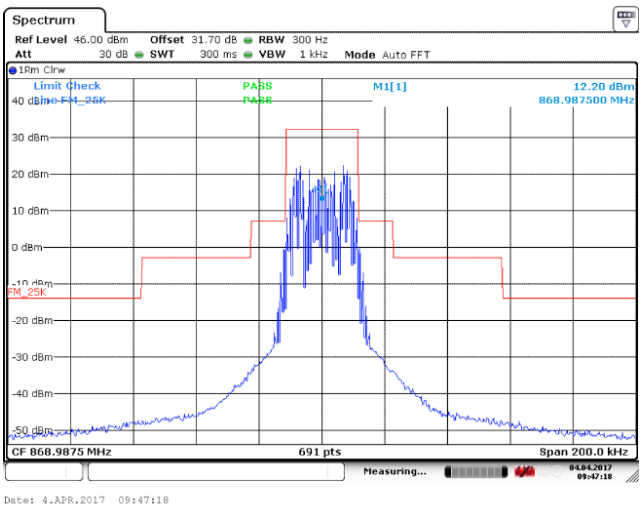

High Frequency: 868.9875MHz (Mask B)

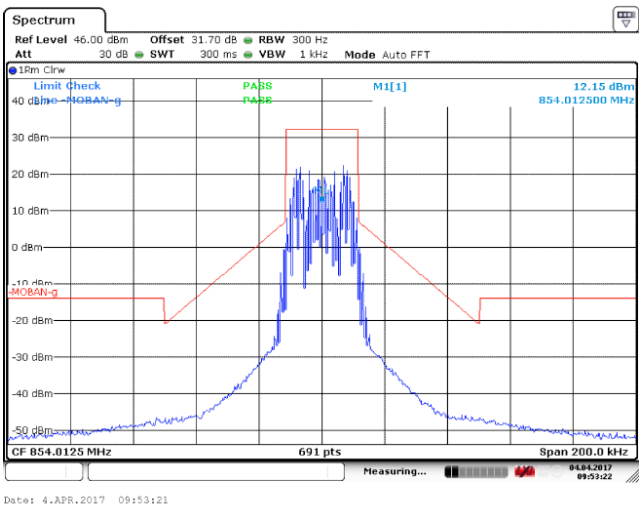

Low Frequency: 854.0125MHz (Mask G)

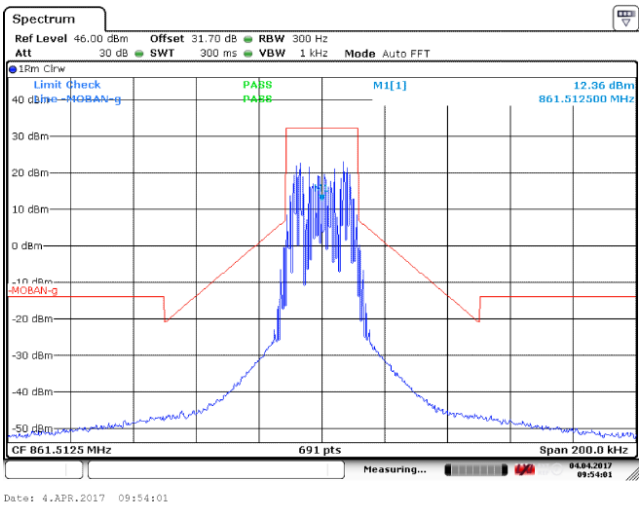

Mid Frequency: 861.5125MHz (Mask G)

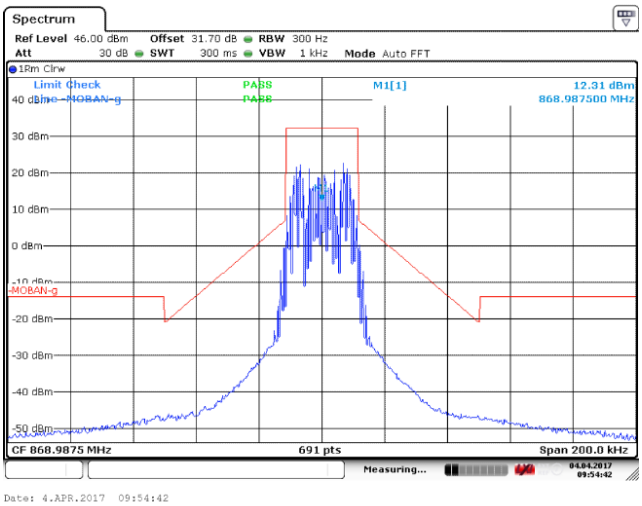

High Frequency: 868.9875MHz (Mask G)

(2) Uplink

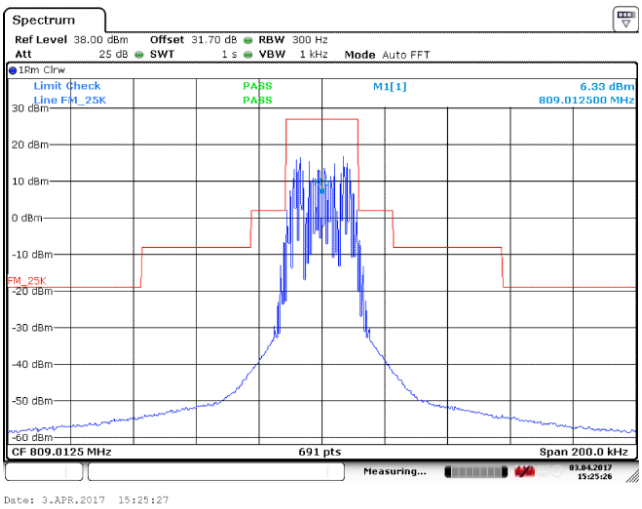

Low Frequency: 809.0125MHz (Mask B)

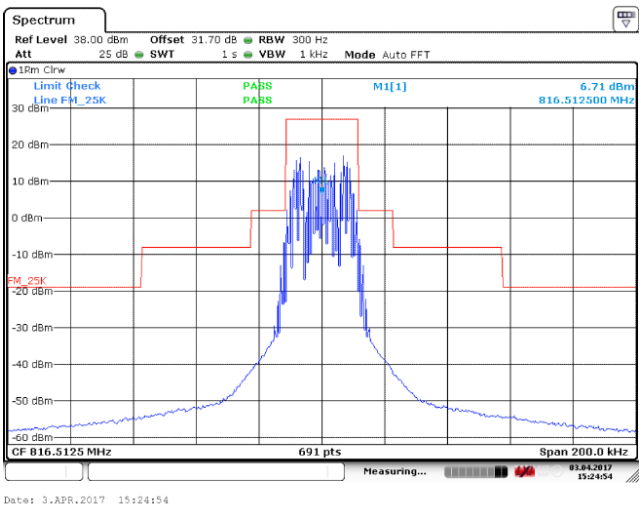

Mid Frequency: 816.5125MHz (Mask B)

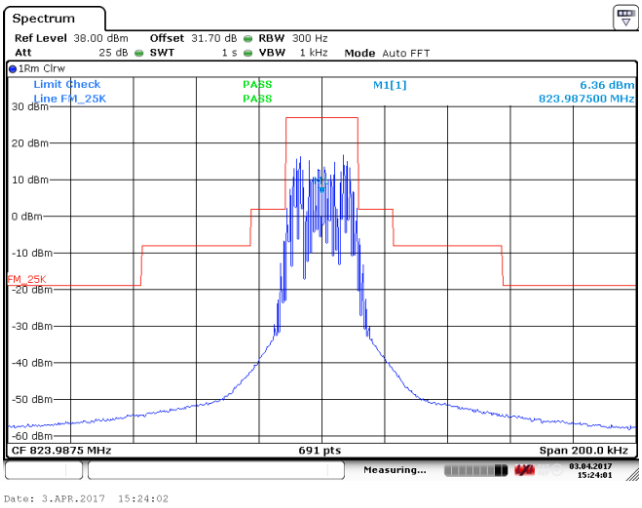

High Frequency: 823.9875MHz (Mask B)

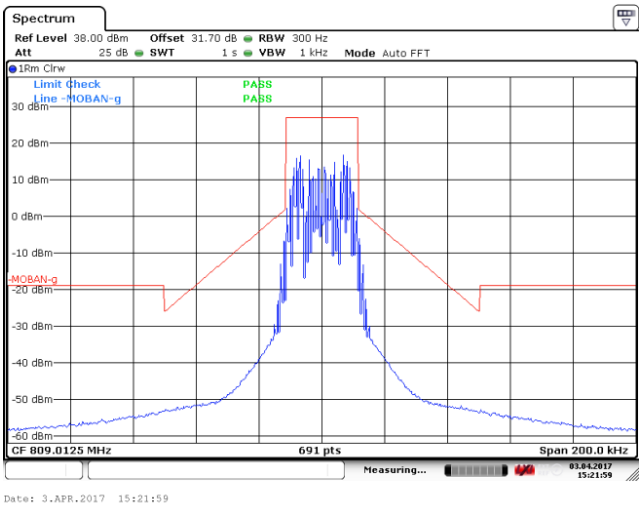

Low Frequency: 809.0125MHz (Mask G)

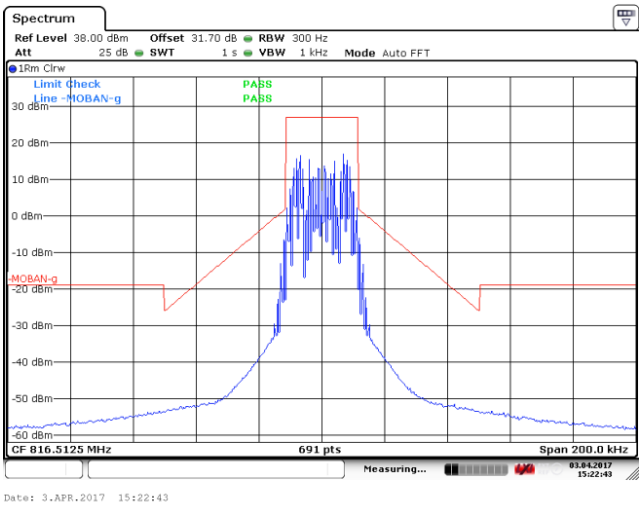

Mid Frequency: 816.5125MHz (Mask G)

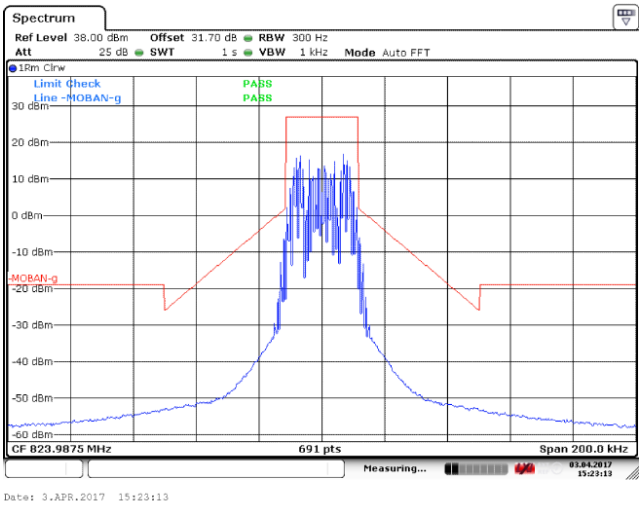

High Frequency: 823.9875MHz (Mask G)

6.4 Conducted spurious emissions

Test Date (yy-mm-dd): 2017-04-12 to 2017-04-15

Test environment: Normal

Ambient Temp 23.8℃~28.1℃, Humid 44%~59%, Atmospheric Pressure 101kpa

Power supply: AC 120V 50/60Hz
DC -48V

Test Method: KDB 935210 D05 Indus Booster Basic Meas v01r01

Test Requirement: FCC part 90.219(e)(3)

6.4.1 Limit

Specification test limits of spurious emissions from a signal booster are given in table 8

Table 8 Spurious emissions limits

frequency range	Maximum level	Measurement bandwidth
9kHz~150kHz	-13dBm	1kHz
150kHz~30MHz	-13dBm	10kHz
30MHz~1000MHz	-13dBm	100kHz
1000MHz~8600MHz	-13dBm	1MHz

NOTE:

1. RF channels to be tested for single-carrier: Low frequency, Mid frequency and High frequency;
2. Modulation types are C4FM, Tetra, Analog FM(10kHz/1kHz) and LTE;

6.4.2 Test configuration

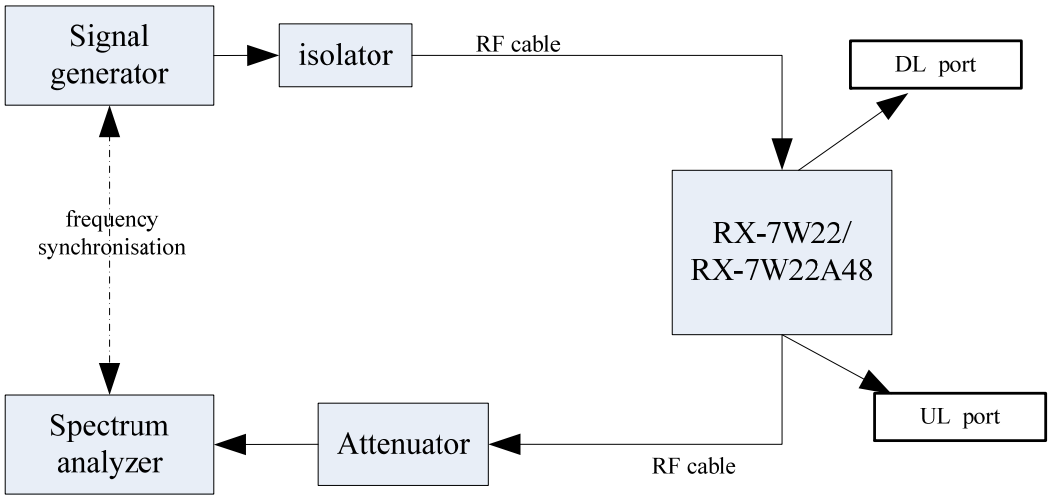

Figure 7: Conducted spurious emissions arrangement for Downlink

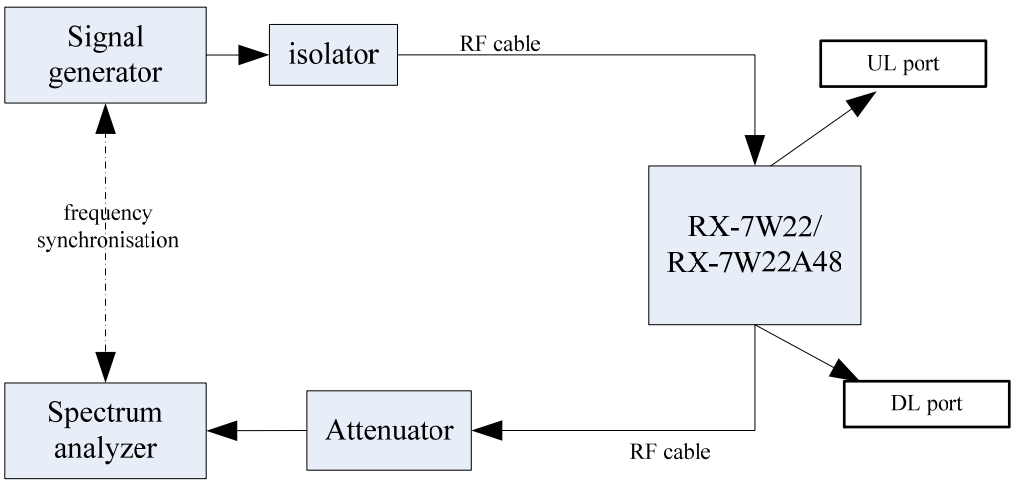

Figure 8: Conducted spurious emissions arrangement for Uplink

6.4.3 Test procedures

(1) Connect the equipment as illustrated Figure 7 and Figure 8, when the output power is over the maximum value of the Spectrum Analyzer, add the attenuator to avoid destroying;

(2) The signal generator should initially be configured to produce C4FM(Tetra , Analog FM or LTE) test signals;

(3) Set the signal generator frequency to the center frequency of the EUT operating band;

(4) Set the output power level so that the resultant signal is just below the AGC threshold and maximum gain;

(5) Connect a spectrum analyzer to the output of the EUT, using appropriate attenuation as necessary;

(6) Set the RBW = 100 kHz. (i.e., for 30 MHz to 1 GHz PLMRS and/or PSRS booster devices);

(7) Set the VBW = 3 × RBW;

(8) Set the Sweep time = auto-couple;

(9) Set the detector to PEAK;

(10) Set the spectrum analyzer start frequency to 30 MHz (or the lowest radio frequency signal generated in the EUT, without going below 9 kHz if the EUT has additional internal clock. frequencies), and the stop frequency to 10 times the highest allowable frequency of the EUT passband;

(11) Select MAX HOLD, and use the marker peak function to find the highest emission(s) outside the passband. (This could be either at a frequency lesser or greater than the passband frequencies.);

(12) Capture a plot for inclusion in the test report;

(13) Repeat steps (3) to (12) for each authorized frequency band/block of operation

6.4.4 Test Results

6.4.4.1 700MHz Band

6.4.4.1.1 Modulation signal: LTE

Frequency range		Max. Spurious Limit	RBW	Max. Spurious mark Level (dBm)	Result
1). AC 120V, 50/60Hz					
1.1) Downlink transmit mode (Frequency range: 758MHz~768MHz)					
frequency 763.0MHz	9kHz~150kHz	-13dBm	1kHz	-45.46	pass
	150kHz~30MHz	-13dBm	10kHz	-58.64	pass
	30MHz~1000MHz	-13dBm	100kHz	-57.17	pass
	1000MHz~8600MHz	-13dBm	1MHz	-44.65	pass
1.2). Uplink transmit mode(Frequency range: 788MHz~798MHz)					
Low frequency 793.0MHz	9kHz~150kHz	-13dBm	1kHz	-42.17	pass
	150kHz~30MHz	-13dBm	10kHz	-40.18	pass
	30MHz~1000MHz	-13dBm	100kHz	-60.73	pass
	1000MHz~8600MHz	-13dBm	1MHz	-48.36	pass
2. DC -48V					
2.1) Downlink transmit mode (Frequency range: 758MHz~768MHz)					
Mid frequency 802.00625MHz	9kHz~150kHz	-13dBm	1kHz	-41.28	pass
	150kHz~30MHz	-13dBm	10kHz	-57.92	pass
	30MHz~1000MHz	-13dBm	100kHz	-55.55	pass
	1000MHz~8600MHz	-13dBm	1MHz	-43.76	pass
2.2). Uplink transmit mode(Frequency range: 788MHz~798MHz)					
High frequency 804.99375MHz	9kHz~150kHz	-13dBm	1kHz	-41.74	pass
	150kHz~30MHz	-13dBm	10kHz	-58.73	pass
	30MHz~1000MHz	-13dBm	100kHz	-60.76	pass
	1000MHz~8600MHz	-13dBm	1MHz	-43.02	pass
Note: 1*--Margin= Maximum mark level- specification limit.					

6.4.4.1.2 Modulation signal: C4FM

Frequency range		Max. Spurious Limit	RBW	Max. Spurious mark Level(dBm)	Result
1). AC 120V, 50/60Hz					
1.1) Downlink transmit mode (Frequency range: 769MHz~775MHz)					
Low frequency 769.00625MHz	9kHz~150kHz	-13dBm	1kHz	-71.32	pass
	150kHz~30MHz	-13dBm	10kHz	-79.96	pass
	30MHz~1000MHz	-13dBm	100kHz	-60.57	pass
	1000MHz~8600MHz	-13dBm	1MHz	-41.02	pass
Mid frequency 772.00625MHz	9kHz~150kHz	-13dBm	1kHz	-71.50	pass
	150kHz~30MHz	-13dBm	10kHz	-81.31	pass
	30MHz~1000MHz	-13dBm	100kHz	-60.42	pass
	1000MHz~8600MHz	-13dBm	1MHz	-40.33	pass
High frequency 774.99375MHz	9kHz~150kHz	-13dBm	1kHz	-72.22	pass
	150kHz~30MHz	-13dBm	10kHz	-79.97	pass
	30MHz~1000MHz	-13dBm	100kHz	-39.13	pass
	1000MHz~8600MHz	-13dBm	1MHz	-41.04	pass
1.2) Uplink transmit mode(Frequency range: 799MHz~805MHz)					
Low frequency 799.00625MHz	9kHz~150kHz	-13dBm	1kHz	-81.13	pass
	150kHz~30MHz	-13dBm	10kHz	-81.50	pass
	30MHz~1000MHz	-13dBm	100kHz	-64.95	pass
	1000MHz~8600MHz	-13dBm	1MHz	-45.28	pass
Mid frequency 802.00625MHz	9kHz~150kHz	-13dBm	1kHz	-75.87	pass
	150kHz~30MHz	-13dBm	10kHz	-83.71	pass
	30MHz~1000MHz	-13dBm	100kHz	-48.19	pass
	1000MHz~8600MHz	-13dBm	1MHz	-43.48	pass
High frequency 804.99375MHz	9kHz~150kHz	-13dBm	1kHz	-75.61	pass
	150kHz~30MHz	-13dBm	10kHz	-77.82	pass

	30MHz~1000MHz	-13dBm	100kHz	-42.34	pass
	1000MHz~8600MHz	-13dBm	1MHz	-43.62	pass
2). DC -48V					
2.1) Downlink transmit mode (Frequency range: 769MHz~775MHz)					
Low frequency 769.00625MHz	9kHz~150kHz	-13dBm	1kHz	-71.20	pass
	150kHz~30MHz	-13dBm	10kHz	-71.03	pass
	30MHz~1000MHz	-13dBm	100kHz	-54.36	pass
	1000MHz~8600MHz	-13dBm	1MHz	-42.23	pass
Mid frequency 772.00625MHz	9kHz~150kHz	-13dBm	1kHz	-65.71	pass
	150kHz~30MHz	-13dBm	10kHz	-72.27	pass
	30MHz~1000MHz	-13dBm	100kHz	-54.93	pass
	1000MHz~8600MHz	-13dBm	1MHz	-40.84	pass
High frequency 774.99375MHz	9kHz~150kHz	-13dBm	1kHz	-72.11	pass
	150kHz~30MHz	-13dBm	10kHz	-72.45	pass
	30MHz~1000MHz	-13dBm	100kHz	-55.08	pass
	1000MHz~8600MHz	-13dBm	1MHz	-41.19	pass
2.2) Uplink transmit mode(Frequency range: 799MHz~805MHz)					
Low frequency 799.00625MHz	9kHz~150kHz	-13dBm	1kHz	-81.43	pass
	150kHz~30MHz	-13dBm	10kHz	-79.98	pass
	30MHz~1000MHz	-13dBm	100kHz	-64.64	pass
	1000MHz~8600MHz	-13dBm	1MHz	-59.05	pass
Mid frequency 802.00625MHz	9kHz~150kHz	-13dBm	1kHz	-81.22	pass
	150kHz~30MHz	-13dBm	10kHz	-82.33	pass
	30MHz~1000MHz	-13dBm	100kHz	-60.39	pass
	1000MHz~8600MHz	-13dBm	1MHz	-59.38	pass
High frequency 804.99375MHz	9kHz~150kHz	-13dBm	1kHz	-80.41	pass

	150kHz~30MHz	-13dBm	10kHz	-77.81	pass
	30MHz~1000MHz	-13dBm	100kHz	-46.67	pass
	1000MHz~8600MHz	-13dBm	1MHz	-58.84	pass
Note: 1*--Margin= Maximum mark level- specification limit.					

6.4.4.1.3 Modulation signal: Tetra

Frequency range		Max. Spurious Limit	RBW	Max. Spurious mark Level(dBm)	Result
1). AC 120V, 50/60Hz					
1.1) Downlink transmit mode (Frequency range: 769MHz~775MHz)					
Low frequency 769.0125MHz	9kHz~150kHz	-13dBm	1kHz	-71.24	pass
	150kHz~30MHz	-13dBm	10kHz	-82.17	pass
	30MHz~1000MHz	-13dBm	100kHz	-60.24	pass
	1000MHz~8600MHz	-13dBm	1MHz	-41.22	pass
Mid frequency 772.0125MHz	9kHz~150kHz	-13dBm	1kHz	-71.34	pass
	150kHz~30MHz	-13dBm	10kHz	-80.62	pass
	30MHz~1000MHz	-13dBm	100kHz	-59.80	pass
	1000MHz~8600MHz	-13dBm	1MHz	-40.05	pass
High frequency 774.9875MHz	9kHz~150kHz	-13dBm	1kHz	-72.16	pass
	150kHz~30MHz	-13dBm	10kHz	-80.00	pass
	30MHz~1000MHz	-13dBm	100kHz	-40.00	pass
	1000MHz~8600MHz	-13dBm	1MHz	-40.61	pass
1.2) Uplink transmit mode(Frequency range: 799MHz~805MHz)					
Low frequency 799.0125MHz	9kHz~150kHz	-13dBm	1kHz	-80.51	pass
	150kHz~30MHz	-13dBm	10kHz	-78.30	pass
	30MHz~1000MHz	-13dBm	100kHz	-64.86	pass
	1000MHz~8600MHz	-13dBm	1MHz	-44.87	pass
Mid frequency 802.0125MHz	9kHz~150kHz	-13dBm	1kHz	-75.45	pass

	150kHz~30MHz	-13dBm	10kHz	-78.41	pass
	30MHz~1000MHz	-13dBm	100kHz	-47.27	pass
	1000MHz~8600MHz	-13dBm	1MHz	-43.31	pass
High frequency 804.9875MHz	9kHz~150kHz	-13dBm	1kHz	-75.56	pass
	150kHz~30MHz	-13dBm	10kHz	-77.61	pass
	30MHz~1000MHz	-13dBm	100kHz	-42.68	pass
	1000MHz~8600MHz	-13dBm	1MHz	-43.79	pass
2). DC -48V					
2.1) Downlink transmit mode (Frequency range: 769MHz~775MHz)					
Low frequency 769.0125MHz	9kHz~150kHz	-13dBm	1kHz	-71.24	pass
	150kHz~30MHz	-13dBm	10kHz	-82.17	pass
	30MHz~1000MHz	-13dBm	100kHz	-60.24	pass
	1000MHz~8600MHz	-13dBm	1MHz	-41.22	pass
Mid frequency 772.0125MHz	9kHz~150kHz	-13dBm	1kHz	-71.34	pass
	150kHz~30MHz	-13dBm	10kHz	-80.62	pass
	30MHz~1000MHz	-13dBm	100kHz	-59.80	pass
	1000MHz~8600MHz	-13dBm	1MHz	-40.05	pass
High frequency 774.9875MHz	9kHz~150kHz	-13dBm	1kHz	-72.16	pass
	150kHz~30MHz	-13dBm	10kHz	-80.00	pass
	30MHz~1000MHz	-13dBm	100kHz	-40.00	pass
	1000MHz~8600MHz	-13dBm	1MHz	-40.61	pass
2.2) Uplink transmit mode(Frequency range: 799MHz~805MHz)					
Low frequency 799.0125MHz	9kHz~150kHz	-13dBm	1kHz	-80.51	pass
	150kHz~30MHz	-13dBm	10kHz	-78.30	pass
	30MHz~1000MHz	-13dBm	100kHz	-64.86	pass
	1000MHz~8600MHz	-13dBm	1MHz	-44.87	pass

Mid frequency 802.0125MHz	9kHz~150kHz	-13dBm	1kHz	-75.45	pass
	150kHz~30MHz	-13dBm	10kHz	-78.41	pass
	30MHz~1000MHz	-13dBm	100kHz	-47.27	pass
	1000MHz~8600MHz	-13dBm	1MHz	-43.31	pass
High frequency 804.9875MHz	9kHz~150kHz	-13dBm	1kHz	-75.56	pass
	150kHz~30MHz	-13dBm	10kHz	-77.61	pass
	30MHz~1000MHz	-13dBm	100kHz	-42.68	pass
	1000MHz~8600MHz	-13dBm	1MHz	-43.79	pass
Note: 1*--Margin= Maximum mark level- specification limit.					

6.4.4.1.4 Modulation signal: Analog FM(10kHz/1kHz)

Frequency range	Max. Spurious Limit	RBW	Max. Spurious mark Level(dBm)	Result
1). AC 120V, 50/60Hz				
1.1) Downlink transmit mode (Frequency range: 769MHz~775MHz)				
Low frequency 769.0125MHz	9kHz~150kHz	-13dBm	1kHz	-71.97	pass
	150kHz~30MHz	-13dBm	10kHz	-82.00	pass
	30MHz~1000MHz	-13dBm	100kHz	-60.62	pass
	1000MHz~8600MHz	-13dBm	1MHz	-40.80	pass
Mid frequency 772.0125MHz	9kHz~150kHz	-13dBm	1kHz	-72.19	pass
	150kHz~30MHz	-13dBm	10kHz	-80.52	pass
	30MHz~1000MHz	-13dBm	100kHz	-60.40	pass
	1000MHz~8600MHz	-13dBm	1MHz	-40.63	pass
High frequency 774.9875MHz	9kHz~150kHz	-13dBm	1kHz	-71.92	pass
	150kHz~30MHz	-13dBm	10kHz	-81.85	pass
	30MHz~1000MHz	-13dBm	100kHz	-39.73	pass
	1000MHz~8600MHz	-13dBm	1MHz	-39.99	pass
1.2) Uplink transmit mode(Frequency range: 799MHz~805MHz)				

Low frequency 799.0125MHz	9kHz~150kHz	-13dBm	1kHz	-79.46	pass
	150kHz~30MHz	-13dBm	10kHz	-77.82	pass
	30MHz~1000MHz	-13dBm	100kHz	-65.49	pass
	1000MHz~8600MHz	-13dBm	1MHz	-44.66	pass
Mid frequency 802.0125MHz	9kHz~150kHz	-13dBm	1kHz	-74.87	pass
	150kHz~30MHz	-13dBm	10kHz	-78.50	pass
	30MHz~1000MHz	-13dBm	100kHz	-47.82	pass
	1000MHz~8600MHz	-13dBm	1MHz	-42.95	pass
High frequency 804.9875MHz	9kHz~150kHz	-13dBm	1kHz	-76.58	pass
	150kHz~30MHz	-13dBm	10kHz	-77.24	pass
	30MHz~1000MHz	-13dBm	100kHz	-40.41	pass
	1000MHz~8600MHz	-13dBm	1MHz	-44.96	pass
2). DC -48V					
2.1) Downlink transmit mode (Frequency range: 769MHz~775MHz)					
Low frequency 769.0125MHz	9kHz~150kHz	-13dBm	1kHz	-70.30	pass
	150kHz~30MHz	-13dBm	10kHz	-69.70	pass
	30MHz~1000MHz	-13dBm	100kHz	-55.26	pass
	1000MHz~8600MHz	-13dBm	1MHz	-42.21	pass
Mid frequency 772.0125MHz	9kHz~150kHz	-13dBm	1kHz	-71.75	pass
	150kHz~30MHz	-13dBm	10kHz	-71.92	pass
	30MHz~1000MHz	-13dBm	100kHz	-55.63	pass
	1000MHz~8600MHz	-13dBm	1MHz	-40.69	pass
High frequency 774.9875MHz	9kHz~150kHz	-13dBm	1kHz	-68.44	pass
	150kHz~30MHz	-13dBm	10kHz	-71.02	pass
	30MHz~1000MHz	-13dBm	100kHz	-55.37	pass
	1000MHz~8600MHz	-13dBm	1MHz	-41.32	pass

2.2) Uplink transmit mode(Frequency range: 799MHz~805MHz)					
Low frequency 799.0125MHz	9kHz~150kHz	-13dBm	1kHz	-81.12	pass
	150kHz~30MHz	-13dBm	10kHz	-78.26	pass
	30MHz~1000MHz	-13dBm	100kHz	-64.33	pass
	1000MHz~8600MHz	-13dBm	1MHz	-59.09	pass
Mid frequency 802.0125MHz	9kHz~150kHz	-13dBm	1kHz	-80.60	pass
	150kHz~30MHz	-13dBm	10kHz	-77.80	pass
	30MHz~1000MHz	-13dBm	100kHz	-60.55	pass
	1000MHz~8600MHz	-13dBm	1MHz	-59.25	pass
High frequency 804.9875MHz	9kHz~150kHz	-13dBm	1kHz	-76.03	pass
	150kHz~30MHz	-13dBm	10kHz	-77.72	pass
	30MHz~1000MHz	-13dBm	100kHz	-42.00	pass
	1000MHz~8600MHz	-13dBm	1MHz	-58.93	pass
Note: 1*--Margin= Maximum mark level- specification limit.					

6.4.4.2 800MHz Band

6.4.4.2.1 Modulation signal: C4FM

Frequency range		Max. Spurious Limit	RBW	Max. Spurious mark Level(dBm)	Result
1). AC 120V, 50/60Hz					
1.1) Downlink transmit mode (Frequency range: 851MHz~869MHz)					
Low frequency 851.00625MHz	9kHz~150kHz	-13dBm	1kHz	-61.44	pass
	150kHz~30MHz	-13dBm	10kHz	-69.62	pass
	30MHz~1000MHz	-13dBm	100kHz	-56.08	pass
	1000MHz~8600MHz	-13dBm	1MHz	-41.91	pass
Mid frequency 860.00625MHz	9kHz~150kHz	-13dBm	1kHz	-62.03	pass
	150kHz~30MHz	-13dBm	10kHz	-69.84	pass
	30MHz~1000MHz	-13dBm	100kHz	-55.98	pass
	1000MHz~8600MHz	-13dBm	1MHz	-41.29	pass

High frequency 868.99375MHz	9kHz~150kHz	-13dBm	1kHz	-62.07	pass
	150kHz~30MHz	-13dBm	10kHz	-69.67	pass
	30MHz~1000MHz	-13dBm	100kHz	-56.05	pass
	1000MHz~8600MHz	-13dBm	1MHz	-43.09	pass
1.2) Uplink transmit mode(Frequency range: 806MHz~824MHz)					
Low frequency 806.00625MHz	9kHz~150kHz	-13dBm	1kHz	-79.45	pass
	150kHz~30MHz	-13dBm	10kHz	-73.88	pass
	30MHz~1000MHz	-13dBm	100kHz	-54.37	pass
	1000MHz~8600MHz	-13dBm	1MHz	-43.42	pass
Mid frequency 815.00625MHz	9kHz~150kHz	-13dBm	1kHz	-79.41	pass
	150kHz~30MHz	-13dBm	10kHz	-73.76	pass
	30MHz~1000MHz	-13dBm	100kHz	-53.47	pass
	1000MHz~8600MHz	-13dBm	1MHz	-43.17	pass
High frequency 823.99375MHz	9kHz~150kHz	-13dBm	1kHz	-75.65	pass
	150kHz~30MHz	-13dBm	10kHz	-73.50	pass
	30MHz~1000MHz	-13dBm	100kHz	-52.55	pass
	1000MHz~8600MHz	-13dBm	1MHz	-45.01	pass
2). DC -48V					
2.1) Downlink transmit mode (Frequency range: 851MHz~869MHz)					
Low frequency 851.00625MHz	9kHz~150kHz	-13dBm	1kHz	-70.29	pass
	150kHz~30MHz	-13dBm	10kHz	-70.40	pass
	30MHz~1000MHz	-13dBm	100kHz	-54.45	pass
	1000MHz~8600MHz	-13dBm	1MHz	-41.91	pass
Mid frequency 860.00625MHz	9kHz~150kHz	-13dBm	1kHz	-71.82	pass
	150kHz~30MHz	-13dBm	10kHz	-71.85	pass
	30MHz~1000MHz	-13dBm	100kHz	-55.18	pass
	1000MHz~8600MHz	-13dBm	1MHz	-41.84	pass
High frequency	9kHz~150kHz	-13dBm	1kHz	-72.25	pass

868.99375MHz	150kHz~30MHz	-13dBm	10kHz	-70.82	pass
	30MHz~1000MHz	-13dBm	100kHz	-55.03	pass
	1000MHz~8600MHz	-13dBm	1MHz	-42.82	pass
2.2) Uplink transmit mode(Frequency range: 806MHz~824MHz)					
Low frequency 806.00625MHz	9kHz~150kHz	-13dBm	1kHz	-83.99	pass
	150kHz~30MHz	-13dBm	10kHz	-81.35	pass
	30MHz~1000MHz	-13dBm	100kHz	-61.03	pass
	1000MHz~8600MHz	-13dBm	1MHz	-44.25	pass
Mid frequency 815.00625MHz	9kHz~150kHz	-13dBm	1kHz	-84.26	pass
	150kHz~30MHz	-13dBm	10kHz	-84.50	pass
	30MHz~1000MHz	-13dBm	100kHz	-60.12	pass
	1000MHz~8600MHz	-13dBm	1MHz	-43.62	pass
High frequency 823.99375MHz	9kHz~150kHz	-13dBm	1kHz	-84.09	pass
	150kHz~30MHz	-13dBm	10kHz	-82.20	pass
	30MHz~1000MHz	-13dBm	100kHz	-60.60	pass
	1000MHz~8600MHz	-13dBm	1MHz	-44.49	pass
Note: 1*--Margin= Maximum mark level- specification limit.					

6.4.4.2.2 Modulation signal: Tetra

Frequency range	Max. Spurious Limit	RBW	Max. Spurious mark Level(dBm)	Result
1). AC 120V, 50/60Hz				
1.1) Downlink transmit mode (Frequency range: 851MHz~869MHz)				
Low frequency 851.0125MHz	9kHz~150kHz	-13dBm	1kHz	-60.67	pass
	150kHz~30MHz	-13dBm	10kHz	-70.36	pass
	30MHz~1000MHz	-13dBm	100kHz	-55.25	pass
	1000MHz~8600MHz	-13dBm	1MHz	-42.35	pass
Mid frequency 860.0125MHz	9kHz~150kHz	-13dBm	1kHz	-59.73	pass
	150kHz~30MHz	-13dBm	10kHz	-70.55	pass

	30MHz~1000MHz	-13dBm	100kHz	-55.01	pass
	1000MHz~8600MHz	-13dBm	1MHz	-41.49	pass
High frequency 868.9875MHz	9kHz~150kHz	-13dBm	1kHz	-62.19	pass
	150kHz~30MHz	-13dBm	10kHz	-68.23	pass
	30MHz~1000MHz	-13dBm	100kHz	-54.99	pass
	1000MHz~8600MHz	-13dBm	1MHz	-43.57	pass
1.2) Uplink transmit mode(Frequency range: 806MHz~824MHz)					
Low frequency 806.0125MHz	9kHz~150kHz	-13dBm	1kHz	-79.07	pass
	150kHz~30MHz	-13dBm	10kHz	-72.94	pass
	30MHz~1000MHz	-13dBm	100kHz	-54.69	pass
	1000MHz~8600MHz	-13dBm	1MHz	-44.10	pass
Mid frequency 815.0125MHz	9kHz~150kHz	-13dBm	1kHz	-80.02	pass
	150kHz~30MHz	-13dBm	10kHz	-72.58	pass
	30MHz~1000MHz	-13dBm	100kHz	-55.03	pass
	1000MHz~8600MHz	-13dBm	1MHz	-42.63	pass
High frequency 823.9875MHz	9kHz~150kHz	-13dBm	1kHz	-80.10	pass
	150kHz~30MHz	-13dBm	10kHz	-73.49	pass
	30MHz~1000MHz	-13dBm	100kHz	-55.04	pass
	1000MHz~8600MHz	-13dBm	1MHz	-43.70	pass
2). DC -48V					
2.1) Downlink transmit mode (Frequency range: 851MHz~869MHz)					
Low frequency 851.0125MHz	9kHz~150kHz	-13dBm	1kHz	-72.16	pass
	150kHz~30MHz	-13dBm	10kHz	-68.81	pass
	30MHz~1000MHz	-13dBm	100kHz	-55.33	pass
	1000MHz~8600MHz	-13dBm	1MHz	-41.84	pass
Mid frequency 860.0125MHz	9kHz~150kHz	-13dBm	1kHz	-72.74	pass
	150kHz~30MHz	-13dBm	10kHz	-70.99	pass

	30MHz~1000MHz	-13dBm	100kHz	-54.95	pass
	1000MHz~8600MHz	-13dBm	1MHz	-41.72	pass
High frequency 868.9875MHz	9kHz~150kHz	-13dBm	1kHz	-72.21	pass
	150kHz~30MHz	-13dBm	10kHz	-70.64	pass
	30MHz~1000MHz	-13dBm	100kHz	-55.37	pass
	1000MHz~8600MHz	-13dBm	1MHz	-43.01	pass
2.2) Uplink transmit mode(Frequency range: 806MHz~824MHz)					
Low frequency 806.0125MHz	9kHz~150kHz	-13dBm	1kHz	-84.16	pass
	150kHz~30MHz	-13dBm	10kHz	-83.76	pass
	30MHz~1000MHz	-13dBm	100kHz	-60.37	pass
	1000MHz~8600MHz	-13dBm	1MHz	-44.16	pass
Mid frequency 815.0125MHz	9kHz~150kHz	-13dBm	1kHz	-82.77	pass
	150kHz~30MHz	-13dBm	10kHz	-81.77	pass
	30MHz~1000MHz	-13dBm	100kHz	-60.68	pass
	1000MHz~8600MHz	-13dBm	1MHz	-44.25	pass
High frequency 823.9875MHz	9kHz~150kHz	-13dBm	1kHz	-84.61	pass
	150kHz~30MHz	-13dBm	10kHz	-83.26	pass
	30MHz~1000MHz	-13dBm	100kHz	-60.78	pass
	1000MHz~8600MHz	-13dBm	1MHz	-44.23	pass
Note: 1*--Margin= Maximum mark level- specification limit.					

6.4.4.2.3 Modulation signal: Analog FM(10kHz/1kHz)

Frequency range	Max. Spurious Limit	RBW	Max. Spurious mark Level(dBm)	Result
1). AC 120V, 50/60Hz				
1.1) Downlink transmit mode (Frequency range: 851MHz~869MHz)				
Low frequency 851.0125MHz	9kHz~150kHz	-13dBm	1kHz	-61.19	pass
	150kHz~30MHz	-13dBm	10kHz	-67.82	pass
	30MHz~1000MHz	-13dBm	100kHz	-55.68	pass

	1000MHz~8600MHz	-13dBm	1MHz	-41.89	pass
Mid frequency 860.0125MHz	9kHz~150kHz	-13dBm	1kHz	-62.21	pass
	150kHz~30MHz	-13dBm	10kHz	-68.57	pass
	30MHz~1000MHz	-13dBm	100kHz	-55.04	pass
	1000MHz~8600MHz	-13dBm	1MHz	-41.33	pass
High frequency 868.9875MHz	9kHz~150kHz	-13dBm	1kHz	-61.56	pass
	150kHz~30MHz	-13dBm	10kHz	-67.97	pass
	30MHz~1000MHz	-13dBm	100kHz	-54.88	pass
	1000MHz~8600MHz	-13dBm	1MHz	-43.41	pass
1.2) Uplink transmit mode(Frequency range: 806MHz~824MHz)					
Low frequency 806.0125MHz	9kHz~150kHz	-13dBm	1kHz	-82.76	pass
	150kHz~30MHz	-13dBm	10kHz	-82.87	pass
	30MHz~1000MHz	-13dBm	100kHz	-63.58	pass
	1000MHz~8600MHz	-13dBm	1MHz	-42.78	pass
Mid frequency 815.0125MHz	9kHz~150kHz	-13dBm	1kHz	-82.14	pass
	150kHz~30MHz	-13dBm	10kHz	-83.33	pass
	30MHz~1000MHz	-13dBm	100kHz	-63.45	pass
	1000MHz~8600MHz	-13dBm	1MHz	-44.39	pass
High frequency 823.9875MHz	9kHz~150kHz	-13dBm	1kHz	-81.93	pass
	150kHz~30MHz	-13dBm	10kHz	-83.76	pass
	30MHz~1000MHz	-13dBm	100kHz	-63.26	pass
	1000MHz~8600MHz	-13dBm	1MHz	-44.28	pass
2). DC -48V					
2.1) Downlink transmit mode (Frequency range: 851MHz~869MHz)					
Low frequency 851.0125MHz	9kHz~150kHz	-13dBm	1kHz	-72.51	pass
	150kHz~30MHz	-13dBm	10kHz	-71.05	pass

	30MHz~1000MHz	-13dBm	100kHz	-54.51	pass
	1000MHz~8600MHz	-13dBm	1MHz	-41.45	pass
Mid frequency 860.0125MHz	9kHz~150kHz	-13dBm	1kHz	-72.50	pass
	150kHz~30MHz	-13dBm	10kHz	-71.57	pass
	30MHz~1000MHz	-13dBm	100kHz	-55.15	pass
	1000MHz~8600MHz	-13dBm	1MHz	-41.80	pass
High frequency 868.9875MHz	9kHz~150kHz	-13dBm	1kHz	-72.04	pass
	150kHz~30MHz	-13dBm	10kHz	-70.27	pass
	30MHz~1000MHz	-13dBm	100kHz	-55.21	pass
	1000MHz~8600MHz	-13dBm	1MHz	-42.77	pass
2.2) Uplink transmit mode(Frequency range: 806MHz~824MHz)					
Low frequency 806.0125MHz	9kHz~150kHz	-13dBm	1kHz	-83.60	pass
	150kHz~30MHz	-13dBm	10kHz	-82.79	pass
	30MHz~1000MHz	-13dBm	100kHz	-61.04	pass
	1000MHz~8600MHz	-13dBm	1MHz	-43.45	pass
Mid frequency 815.0125MHz	9kHz~150kHz	-13dBm	1kHz	-83.60	pass
	150kHz~30MHz	-13dBm	10kHz	-81.37	pass
	30MHz~1000MHz	-13dBm	100kHz	-59.94	pass
	1000MHz~8600MHz	-13dBm	1MHz	-43.97	pass
High frequency 823.9875MHz	9kHz~150kHz	-13dBm	1kHz	-85.08	pass
	150kHz~30MHz	-13dBm	10kHz	-83.22	pass
	30MHz~1000MHz	-13dBm	100kHz	-60.50	pass
	1000MHz~8600MHz	-13dBm	1MHz	-44.38	pass
Note: 1*--Margin= Maximum mark level- specification limit.					

6.5 Frequency stability

Test Date (yy-mm-dd): 2017-04-12 to 2017-04-15

Test environment: Normal

Ambient Temp 23.8℃~28.1℃, Humid 44%~59%, Atmospheric Pressure 101kpa

Power supply: AC 120V 50/60Hz

Test Method: KDB 935210 D05 Indus Booster Basic Meas v01r01

Test Requirement: FCC part 90.213 & part 90.539

6.5.1 Limit

Unless noted elsewhere, transmitters used in the services governed by this part must have a minimum frequency stability as specified in the following table 9.

Table 9 Frequency stability limits

frequency range(MHz)	Minimum Frequency Stability(ppm)
758-768/788~798	±2.5
769-775/799-805	±1.5(Channel Bandwidth 12.5kHz) ±2.5(Channel Bandwidth 25kHz)
806-809/851-854	±1.0
809-824/854-869	±1.5

6.5.2 Test configuration

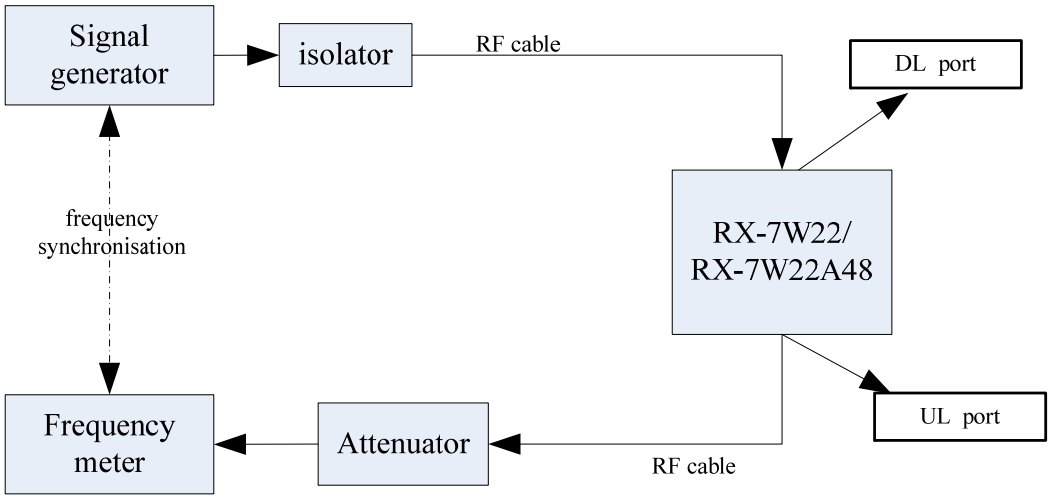

Figure 9: Frequency stability arrangement for Downlink

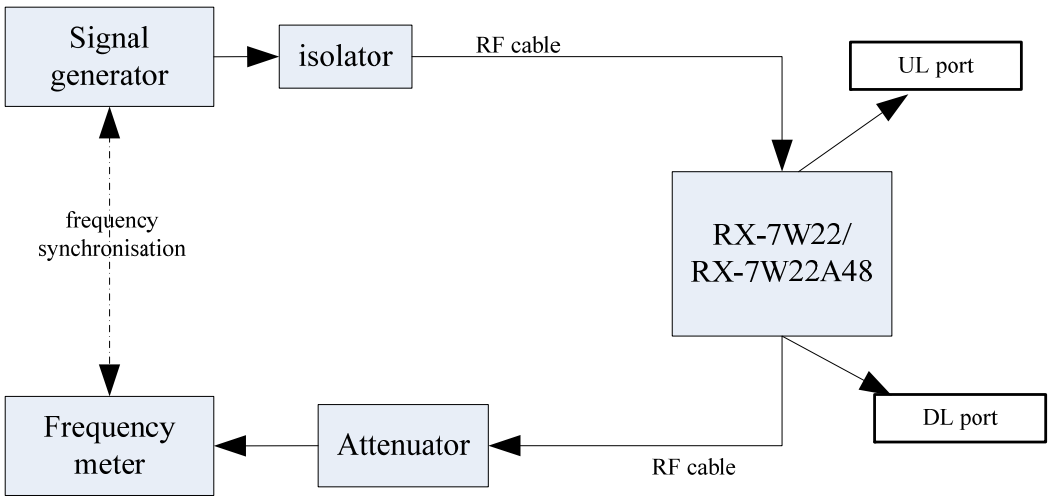

Figure 10: Frequency stability arrangement for Uplink

6.5.3 Test procedures

(1) Connect the equipment as illustrated Figure 9 and Figure 10, when the output power is over the maximum value of the Spectrum Analyzer, add the attenuator to avoid destroying;

(2) The signal generator should initially be configured to produce CW signals;

(3) Set the signal generator frequency to the center frequency of the EUT operating band;

(4) Keep signal source and frequency meter synchronization;

(5) Record Output frequency value when level as the ALC threshold level;

(6) Read the frequency at the relative temperature;

(7) Vary the voltage from -15% norminal voltage to +15% voltage;

(8) Repeat RF channels to be tested for single-carrier: Low frequency and High frequency;

6.5.4 Test Results

6.5.4.1 700MHz Band

Voltage	Intput carrier frequency(MHz)	Output carrier frequency(MHz)	Limit(ppm)	Frequency stability(ppm)	Result
1). Downlink Frequency range: 758MHz~768MHz					
AC 102V(120*85%)	763.0	762.999908	±2.5	-0.121	pass
AC 120V	763.0	762.999908	±2.5	-0.121	pass
AC 138V(120*115%)	763.0	762.999908	±2.5	-0.121	pass
Frequency range: 769MHz~775MHz					
AC 102V(120*85%)	772.0125	772.012410	±1.5	-0.117	pass
AC 120V	772.0125	772.012410	±1.5	-0.117	pass
AC 138V(120*115%)	772.0125	772.012410	±1.5	-0.117	pass
2). Uplink Frequency range: 788MHz~798MHz					
AC 102V(120*85%)	793.0	792.999900	±2.5	-0.126	pass
AC 120V	793.0	792.999900	±2.5	-0.126	pass
AC 138V(120*115%)	793.0	792.999900	±2.5	-0.126	pass
Frequency range: 799MHz~805MHz					
AC 102V(120*85%)	802.0125	802.012401	±1.5	-0.123	pass
AC 120V	802.0125	802.012401	±1.5	-0.123	pass
AC 138V(120*115%)	802.0125	802.012401	±1.5	-0.123	pass

6.5.4.2 800MHz Band

Voltage	Intput carrier frequency(MHz)	Output carrier frequency(MHz)	Limit(ppm)	Frequency stability(ppm)	Result
1). Downlink Frequency range: 851MHz~869MHz					
AC 102V(120*85%)	860.0125	860.012395	±1.0	-0.122	pass
AC 120V	860.0125	860.012395	±1.0	-0.122	pass
AC 138V(120*115%)	860.0125	860.012395	±1.0	-0.122	pass
2). Uplink Frequency range: 806MHz~824MHz					
AC 102V(120*85%)	815.0125	815.012415	±1.0	-0.104	pass
AC 120V	815.0125	815.012415	±1.0	-0.104	pass
AC 138V(120*115%)	815.0125	815.012415	±1.0	-0.104	pass

6.5.5 Test screenshot

6.5.5.1 700MHz Band

Mid Frequency: 763.0MHz

Mid Frequency: 772.0125MHz

Mid Frequency: 793.0MHz

Mid Frequency: 802.0125MHz

6.5.5.2 800MHz Band

Downlink Frequency: 860.0125MHz

Uplink Frequency: 815.0125MHz

6.6 Noise figure

Test Date (yy-mm-dd): 2017-04-12 to 2017-04-15

Test environment: Normal

Ambient Temp 23.8℃~28.1℃, Humid 44%~59%, Atmospheric Pressure 101kpa

Power supply: AC 120V 50/60Hz

Test Method: KDB 935210 D05 Indus Booster Basic Meas v01r01

Test Requirement: FCC part 90.213 & part 90.539

6.6.1 Limit

The noise figure limit of a signal booster must are given in table 10.

Table 10 Noise figure limits

frequency range(MHz)	Max. Noise figure limit(dB)
758-768/788~798	9
769-775/799-805	9
806-824/851-869	9

6.6.2 Test configuration

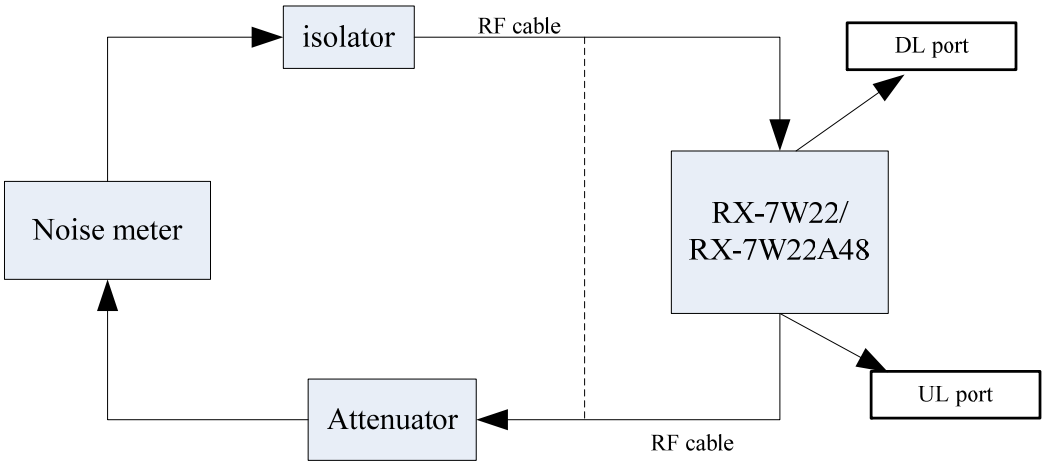

Figure 11: Noise figure arrangement for Downlink

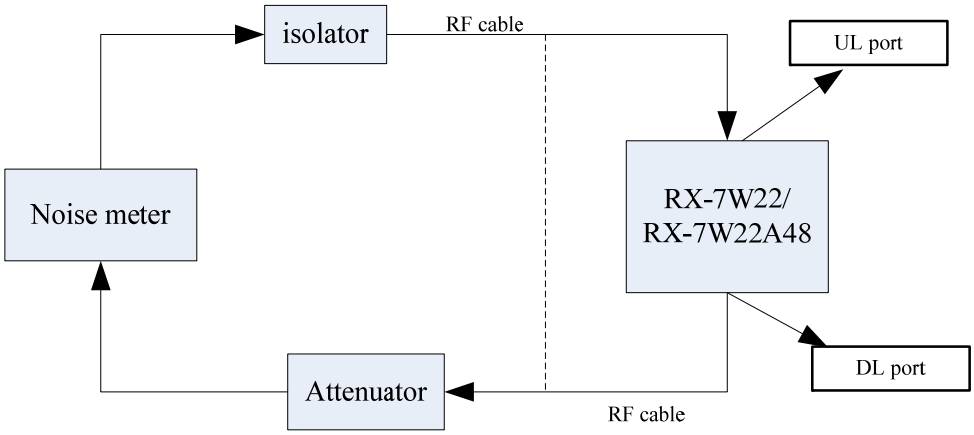

Figure 12: Noise figure arrangement for Uplink

6.6.3 Test procedures

(1) Connect the equipment as illustrated Figure 11 and Figure 12, when the output power is over the maximum value of the Noise meter, add the attenuator to avoid destroying;

(2) Set the signal generator frequency to the center frequency of the EUT operating band and maximum gain;

(3) Set the relevant parameters and connect the dotted line to calibrate;

(4) After calibrating , According to the solid line connecting and testing Noise figure and record data;

(5) Repeat RF channels to be tested for single-carrier: Low frequency and High frequency Repeat steps (2) to (4);