Comba

CriticalPoint

PUBLIC SAFETY BI-DIRECTIONAL AMPLIFIER

USER MANUAL

RX78V2F-B-AC QE: 1-0-0

Comba Telecom Network Systems Ltd.

The information contained herein is the responsibility of and is approved by the following, to whom all enquiries should be directed:

This is an unpublished work the copyright in which vests in Comba International ("Comba"). All rights reserved.

The information contained herein is confidential and the property of Comba and is supplied without liability for errors or omissions. No part may be reproduced, disclosed or used except as authorized by contract or other written permission. The copyright and the foregoing restriction on reproduction and use extend to all media in which the information may be embodied.

0.1 CONTENTS

Section **Page**

0.1 CONTENTS 4
0.2 INDEX TO FIGURES AND TABLES 6
0.3 HISTORY 7
0.4 GLOSSARY OF TERMS 8
0.5 SAFETY NOTICES AND ADMONISHMENTS 9

1 GENERAL INFORMATION 11

2 EQUIPMENT DESCRIPTION 13
2.1 FUNCTIONAL BLOCK DIAGRAM 13
2.2 EQUIPMENT LAYOUT 14
2.3 EQUIPMENT CONSTITUTION 15

3 INSTALLATION 16
3.1 WARNINGS AND ALERTS 16
3.2 SITE PLANNING CONSIDERATIONS 17
3.2.1 SITE PLANNING 17
3.2.2 INSTALLATION CHECKLIST 18
3.3 INSTALLATION PROCEDURES 19
3.3.1 GOODS INWARDS INSPECTION 19
3.3.2 TOOLS 19
3.3.3 PREPARATION 19
3.3.4 WALL MOUNTING 20
3.3.5 DRIP-LOOP 20
3.4 EQUIPMENT CONNECTORS 21
3.4.1 PS BDA CONNECTORS 21
3.4.2 PS BDA LED INDICATORS 22
3.4.3 GROUNDING CONNECTION 22
3.4.4 RF CABLE CONNECTION 23
3.4.5 ETHERNET CONNECTION 23
3.4.6 DRY CONTACT CABLE CONNECTION 24

4 COMMISSIONING 25
4.1 PRE-COMMISSIONING TASKS 25
4.2 COMMISSIONING PROCEDURE 26

5 WEB GUI 28
5.1 WEB GUI CONNECTION 28
5.2 WEB GUI INTRODUCTION 29
5.2.1 [DEVICE] 29
5.2.2 [COMMISSIONING] 31
5.2.3 [TOOLS] 31
5.2.4 [MANAGEMENT] 32

6 MAINTENANCE 35

7 APPENDICES 36
7.1 APPENDIX A: TOOLS 36
7.2 APPENDIX B: DECLARATION OF HARMFUL SUBSTANCES AND CONTENT 37
7.3 APPENDIX C: TROUBLESHOOTING QUICK GUIDE 38

 Copyright - refer to title page

7.4 APPENDIX D: DEVICE REPORT EXAMPLE 40
7.5 APPENDIX E: RMA (RETURN MATERIAL AUTHORIZATION) 41

Copyright - refer to title page

0.2 INDEX TO FIGURES AND TABLES

Figure 1: Front, Side and Bottom Views of the PS BDA Enclosure 11
Figure 2: PS BDA Functional Block Diagram 13
Figure 3: Layout of the PS BDA 14
Figure 4: Mounting Rack Overview 19
Figure 5: PS BDA Wall Mounting 20
Figure 6: Equipment Connectors 21
Figure 7: LED Indicators 22
Figure 8: Commissioning Procedure 26
Figure 9: Input IP Address 28
Figure 10: Input Domain Name 28
Figure 11: Input User Name and Password 28
Figure 12: Web GUI Main Screen 29
Figure 13: Overview Screen 29
Figure 14: External/Dry Contact ALM Screen 30
Figure 15: Channels Screen 30
Figure 16: Fast commission Screen 31
Figure 17: Isolation Check Screen 31
Figure 18: Reset/Import/Export Screen 32
Figure 19: License Screen 32
Figure 20: Firmware Upgrade Screen 33
Figure 21: Device Information Screen 33
Figure 22: User Management Screen 34
Figure 23: Alarm list 38
Figure 24: Reset PA 39

Table 1: Equipment Connectors 21
Table 2: LED Indicators 22
Table 3: Pin Definition of Dry Contact Cable 24
Table 4: Commissioning Task Explanation 27

Copyright - refer to title page

0.3 HISTORY

Change No.	ENU	Details Of Change
1	1-0-0	This manual first created and issued in Aug,2022

Copyright - refer to title page

0.4 GLOSSARY OF TERMS

Abbreviation	Definition
ALC	Automatic Level Control
ATT	Attenuator
BTS	Base Transceiver Station
CH	Channel
CSA	Cross Sectional Area
dB	Decibel
dBm	Decibels relative to 1 milliwatt
DL	Downlink
DT	Donor Terminal
DPX	Duplexer
FS	Frequency Selection
Hz	Hertz
ID	Identification
IF	Intermediate Frequency
LNA	Low Noise Amplifier
LOS	Line-of-Sight
MCU	Main Control Unit
MHz	Megahertz
MT	Mobile Terminal
MTBF	Mean Time Between Failures
NF	Noise Figure
OMC	Operation & Maintenance Center
OMT	Operation & Maintenance Terminal
PA	Power Amplifier
PLL	Phase Locked Loop
PSU	Power Supply Unit
RF	Radio Frequency
SMA	Sub-Miniature A Connector
UL	Uplink
VAC	Volts Alternating Current
VDC	Volts Direct Current
VSWR	Voltage Standing Wave Ratio

Copyright - refer to title page

0.5 SAFETY NOTICES AND ADMONISHMENTS

This document contains safety notices in accordance with appropriate standards. In the interests of conformity with the territory standards for the country concerned, the equivalent territorial admonishments are also shown.

Any installation, adjustment, maintenance and repair of the equipment must only be carried out by trained, authorized personnel. At all times, personnel must comply with any safety notices and instructions.

Specific hazards are indicated by symbol labels on or near the affected parts of the equipment. The labels conform to international standards, are triangular in shape, and are colored black on a yellow background. An informative text label may accompany the symbol label.

Hazard labeling is supplemented by safety notices in the appropriate equipment manual. These notices contain additional information on the nature of the hazard and may also specify precautions.

Note: The grantee is not responsible for any changes or modifications not expressly approved by the party responsible for compliance. Such modifications could void the user's authority to operate the equipment.

For compliance with the general population RF exposure limits, each individual antenna used for this transmitter must be installed to provide a separation distance during normal operation and must not be co-located with any other antenna for meeting RF exposure requirements.

Warning Notices:

These draw the attention of personnel to hazards that may cause death or injury to the operator or others. Examples of use are cases of high voltage, laser emission, toxic substances, point of high temperature, etc.

WARNING. This is NOT a CONSUMER device. It is designed for installation by FCC LICENSEES and QUALIFIED INSTALLERS. You MUST have an FCC LICENSE or express consent of an FCC Licensee to operate this device. The PS BDA can be configured as Class A or Class B Signal Booster. You MUST register Class B signal boosters (as defined in 47 CFR 90.219) online at www.fcc.gov/signal-boosters/registration. Unauthorized use may result in significant forfeiture penalties, including penalties in excess of $100,000 for each continuing violation.

Note: The grantee is not responsible for any changes or modifications not expressly approved by the party responsible for compliance. Such modifications could void the user's authority to operate the equipment.
Alert:
These draw the attention of personnel to hazards that may cause damage to the equipment. An example of use is the case of static electricity hazard.

Caution notices may also be used in the handbook to draw attention to matters that do not constitute a risk of causing damage to the equipment but where there is a possibility of seriously impairing its performance, e.g. by mishandling or gross maladjustment. Warnings and Cautions within the main text do not incorporate labels and may be in shortened form.

Disconnection of the 2 RF connectors may cause damage to the equipment when power is on.

Class B:
When the Maximum antenna gain is 3dBi for downlink and the shortest distance from the
human specific is 0.87m, the device is compliant with the requirement MPE limit for uncontrolled exposure.

WARNING!
Use only authorized and approved antennas, cables and/or coupling devices! The use of unapproved antennas,
cables or coupling devices could cause damage and may be of violation of FCC regulations. The use of unapproved antennas, cables and/or coupling devices is illegal under FCC regulations and may subject the

 Copyright - refer to title page

user to fine.

Ambient temperature range for equipment use: -33 to 55 degrees Celsius.

This equipment is not suitable for use in locations where children are likely to be present.

The product shall connection of the equipment protective earthing conductor to the installation protective earthing conductor (for example, by means of a power cord connected to a socket-outlet with earthing connection).

When the plug on the power supply cord is used as the disconnect device, the socket-outlet shall be easily accessible.

End of Section

Copyright - refer to title page

1 GENERAL INFORMATION

The RX78V2F-B-AC is a new digital dual band public safety repeater (hereafter referred to as PS BDA) designed to protect the lives of first responders and building occupants. Through the use of digital filtering technology, the RX78V2F-B-AC helps eliminate adjacent channel interference to allow band selectivity and support 700MHz and 800MHz rebanding. Up to two non-contiguous frequency bands can be simultaneously supported in each of the 700MHz and 800MHz Public Safety frequencies via a web-based GUI, which provides versatility and total control to the user.

Main Features

- Digital/programmable utilizing FPGA
- Supports public safety 700/800MHz
- Supports P25 P1/P2 digital and conventional analogy communications simultaneously
- Single band versions include license to switch from original band to alternate band
- Shared channels (UL sharing 96C, DL 64C+64C)
- 2W downlink output power for each band
- Channelized Auto Gain Control (AGC) / Channelized uplink squelch
- Built-in mandatory isolation test to prevent BDA oscillation
- Power Charge interface
- Auto shutdown with alarm upon oscillation detection
- Web based GUI for intelligent configuration
- NFPA compliant dry contact alarms, NEMA 4X enclosure

The following figure shows the enclosure of the PS BDA.

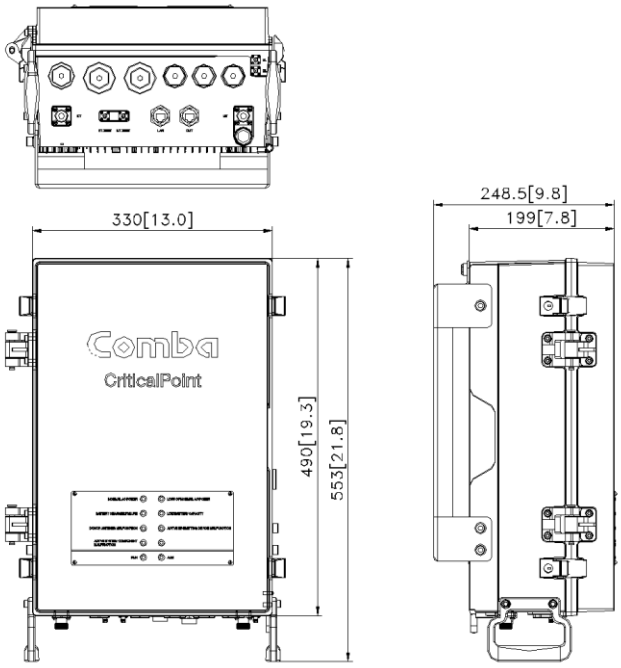

Figure 1: Front, Side and Bottom Views of the PS BDA Enclosure

Copyright - refer to title page

Electrical			700MHz	800MHz
Frequency Range, Uplink		MHz	788-805	806-816
Frequency Range, Downlink		MHz	758-775	851-861
Share Channels			UL sharing 96C, DL 64C+64C	
Total Output Power, Uplink (Typical)		dBm	27	
Total Output Power, Downlink		dBm	33	33
Maximum System Gain		dB	90	90
Gain Adjustment Range (1dB step)		dB	80(Input 30dB, Output 20dB, digital ATT 30dB)	
Pass Band Ripple, p-p		dB	≤ 4	≤ 4
Uplink Noise Figure at max gain		dB	≤7	≤ 7
Out-of-Band emission		dBc	FCC Compliance	
Spurious	9kHz to 1GHz	dBm	FCC Compliance	FCC Compliance
	1GHz to 12.75GHz	dBm		
Maximum RF Input Power without Damage		dBm	+10	+10
Maximum RF Input Power without Overdrive		dBm	-10	-10
Input VSWR		<	1.5	1.5
Antenna port Impedance		Ω	50	50
Mechanical				
Dimensions, H x W x D		mm	330 * 490 * 196 (31.7L)	
Weight (without bracket)		Kg	20	
Power Supply (different hardware type)		VAC	100-240 / 47-63Hz	
Power Consumption (Dual band, UL mute)		W	<100	
Enclosure Cooling			Convection	
RF Connectors * 2			N-Female	
Test Port * 4			SMA (UL, DL, DT-Test, MT-Test)	
LED * 10			Alarm/RUN ALM 1~8	
Communication port *2			RJ45 (LAN, OMT)	
Reserved knock port for external cable rolling			6 ports	
Operating Temperature		ºC	-33 to +55	
Operating Humidity			≤ 95%	
Environmental Class			NEMA 4X	
				Note: Typical specifications at room temperature

Copyright - refer to title page

2 EQUIPMENT DESCRIPTION

2.1 FUNCTIONAL BLOCK DIAGRAM

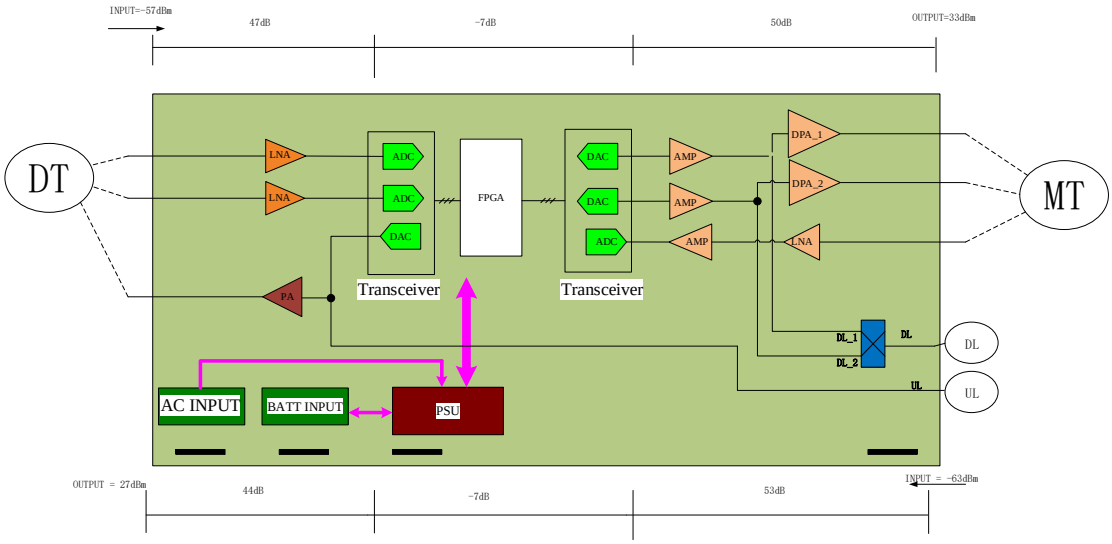

Figure 2: PS BDA Functional Block Diagram

In the downlink path, the BTS signals are received by the donor antenna of the repeater. After the duplexer, the signals are sent to the LNA module for pre-amplification and to the digital RF integrated module for digital filtering and frequency conversion. Then the DL signals will be sent to the downlink PA to amplify power, and filter via the duplexer. After amplification, the signals are transmitted at the MT port to the service antenna.

In the uplink path, the mobile signals are received by the service antenna. After the MT port integrated duplexer, the signals are sent to the LNA, integrated module for digital filtering, then to the PA for power amplification and to the duplexer. After that, the uplink signals are sent to the donor antenna for transmission back to the BTS.

Copyright - refer to title page

2.2 EQUIPMENT LAYOUT

Shown below is the internal layout of the PS BDA.

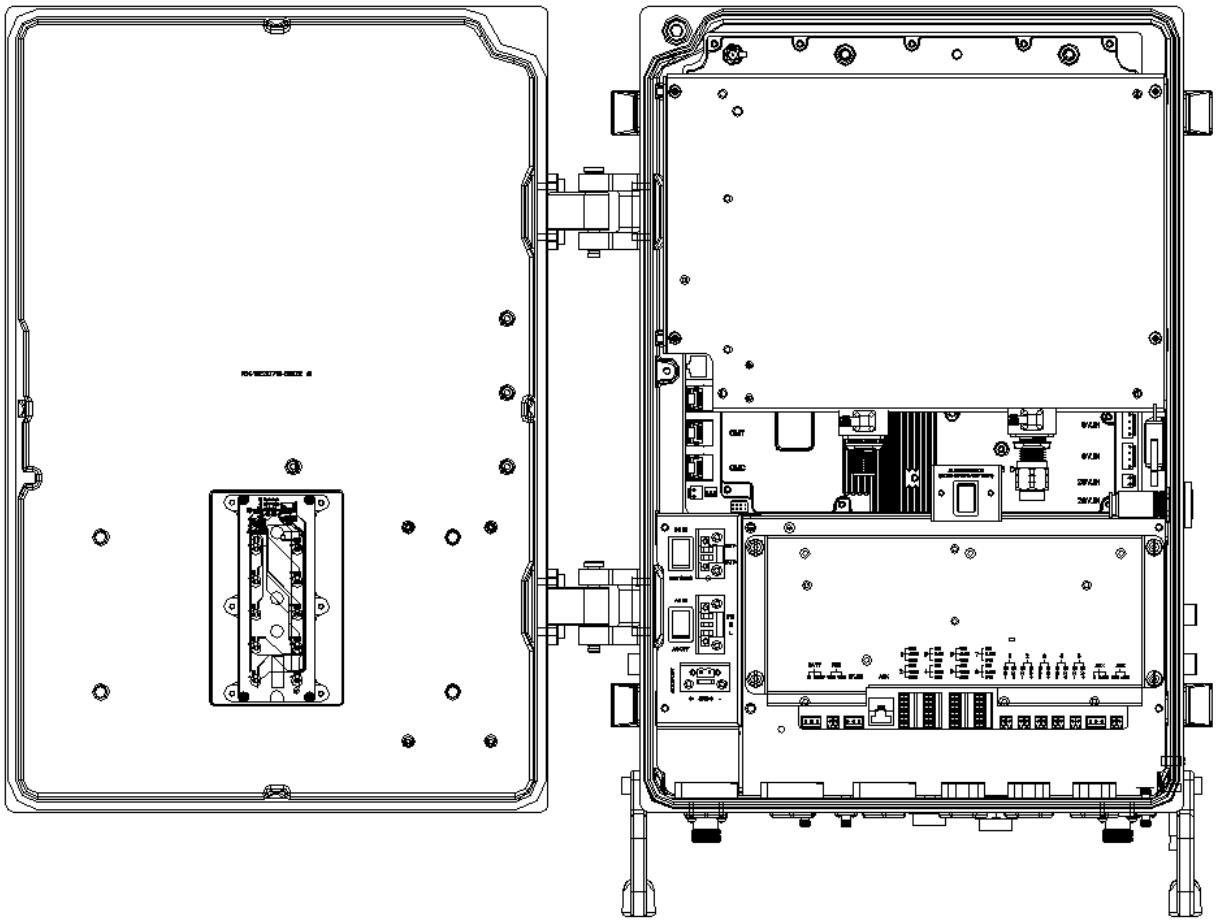

Figure 3: Layout of the PS BDA

Copyright - refer to title page

2.3 EQUIPMENT CONSTITUTION

The typical PS BDA unit consists of the following components:

Master Digital Board and Slave Digital Board: The MCU is used to monitor and control the operation of the repeater. It also provides the communication interface for remote control and status indication. LED indicators provide the operation status of the MCU.

Multiplexer: The DPX is located near the MT and DT terminals and permits the uplink and downlink signals to share a common antenna.

700MHz /800MHz Digital Integrated Module and Power Amplifier: Consists of the Power Conversion module, RF module, digital process module and monitoring modules. The Power Conversion module converts +28V DC voltage into +9VJK and +9VRF. +9VJK, +9VRF are supplied to the monitoring unit, and the RF unit in the integrated module separately. The RF module amplifies and converts the RF signal to IF signal. The Digital process module converts the IF signal into baseband signal via AD conversion and extraction, and filtering. After that, the IF signal will be amplified and converted to an RF signal by the RF module for RF filtering and amplification. The Monitoring module monitors and controls the system parameters and is the interface for both remote monitoring and local commissioning.

Power Supply Unit (PSU): The PSU converts the input voltage into a stable DC supply to provide power for the internal functional modules.

Copyright - refer to title page

3 INSTALLATION

3.1 WARNINGS AND ALERTS

Radio Frequency Energies

There may be situations, particularly for workplace environments near high-powered RF sources, where recommended limits for safe exposure of human beings to RF energy could be exceeded. In such cases, restrictive measures or actions may be necessary to ensure the safe use of RF energy.

High Voltage

The equipment has been designed and constructed to prevent, as far as reasonably practicable danger. Any work activity on or near equipment involving installation, operation or maintenance must be, as far as reasonable, free from danger.

Where there is a risk of damage to electrical systems involving adverse weather, extreme temperatures, wet, corrosive or dirty conditions, flammable or explosive atmospheres, the system must be suitably installed to prevent danger.

Protective Earthing

Equipment provided for the purpose of protecting individuals from electrical risk must be suitable for the purpose and properly maintained and used.

Handling Precautions

This covers a range of activities including lifting, lowering, pushing, pulling, carrying, moving, holding or restraining an object, animal or person from the equipment. It also covers activities that require the use of force or effort, such as pulling a lever, or operating power tools.

Where some of the abovementioned activities are required, the equipment must be handled with care to avoid being damaged.

Electrostatic Discharge (ESD)

Observe standard precautions for handling ESD-sensitive devices. Assume that all solid-state electronic devices are ESD-sensitive. Ensure the use of a grounded wrist strap or equivalent while working with ESD-sensitive devices. Transport, store, and handle ESD-sensitive devices in static-safe environments.

Copyright - refer to title page

3.2 SITE PLANNING CONSIDERATIONS

3.2.1 SITE PLANNING

Site Considerations

Outdoor equipment is designed to be waterproof, rainproof, and with snow protection. Temporary protection should be taken when the equipment enclosure is opened for installation or maintenance in an outdoor environment. The equipment must not be opened for installation or maintenance in bad weather (e.g. gale, storm rainfall, extreme temperatures and high humidity)

Installation Location

Mounting surface shall be capable of supporting the weight of the equipment.

In order to avoid electromagnetic interference, a proper mounting location must be selected to minimize interference from electromagnetic sources such as large electrical equipment.

Environmental

Humidity has an adverse effect on the reliability of the equipment. It is recommended to install the equipment in locations having stable temperature and unrestricted air-flow.

The installation location for the product should be well ventilated. The equipment has been designed to operate at the temperature range and humidity level as stated in the product specifications in the datasheet.

Direct sun light exposure to the equipment should be avoided. Provide additional shelter if necessary.

Power Supply

The power supply unit (PSU) provides power to all modules within the equipment. Depending on the product variant, it is recommended that the PSU be operated on a dedicated circuit breaker or fused circuit.

Grounding Requirement

Verify that the equipment has been well grounded. This includes antennas and all cables connected to the system. Ensure lightning protection for the antennas is properly grounded.

Cable Routing

Depending on equipment configuration, a variety of types of cables are required. Where applicable, ensure cables are properly routed and secured so that they are not damaged.

Manual Handling

During transportation and installation, take necessary handling precautions to avoid potential physical injury to the installation personnel and the equipment.

Copyright - refer to title page

3.2.2 INSTALLATION CHECKLIST

- Working space available for installation and maintenance for each mounting arrangement. Ensure unrestricted airflow.
- Ensure earth ground point is within reach of the ground wire.
- Ensure a power source is within reach of the power cord and the power source has sufficient capacity.
- Where appropriate, ensure unused RF connectors are terminated.
- Do not locate the equipment near large transformers or motors that may cause electromagnetic interference.
- Reduce signal loss in feeder cable by minimizing the length and number of RF connections.
- Ensure VSWR of antennas system < 1.5:1.
- Ensure equipment will be operated within the stated environment (see datasheet)
- Observe handling of all cables to prevent damage.
- Donor antenna should have a narrow beamwidth and positioned in line-of-sight (LOS) to the donor BTS site so that the donor signal level is maximized. This allows the use of minimum gain to achieve the maximum DL output power. The UL gain is typically set lower than or equal to the DL gain to minimize noise interference to the donor BTS
- Service antennas should be selected based on the type of service area, e.g., indoor antenna for indoor application, and panel antenna for outdoor application.

Copyright - refer to title page

3.3 INSTALLATION PROCEDURES

3.3.1 GOODS INWARDS INSPECTION

- Verify the number of packages received against the packing list.
- Check all packages for external damage; report any external damage to the shipping courier. If there is damage, a shipping agent should be present before unpacking and inspecting the contents because damage during transit is the responsibility of the agent.
- Open and check each package against the packing list. If any items are missing, contact Comba.
- Do not remove items from anti-static packing until ready for installation. If damage is discovered at the time of installation, contact the shipping agent.

3.3.2 TOOLS

See Appendix A for a full list of the recommended tools required for installation and routine maintenance.

3.3.3 PREPARATION

- Wall mounting with the masonry bolts supplied, which make use of the outer holes.

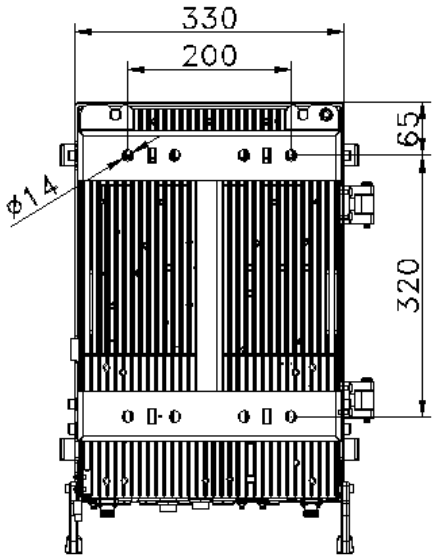

Figure 4: Mounting Rack Overview

Copyright - refer to title page

3.3.4 WALL MOUNTING

- Drill four holes on the wall using the position of four holes on the mounting rack as a guide. Fix the mounting rack to the wall using four masonry bolts (M10x110mm).
- Install the Mounting Rack to the wall.
- Hang the equipment and secure the enclosure to the mounting rack.

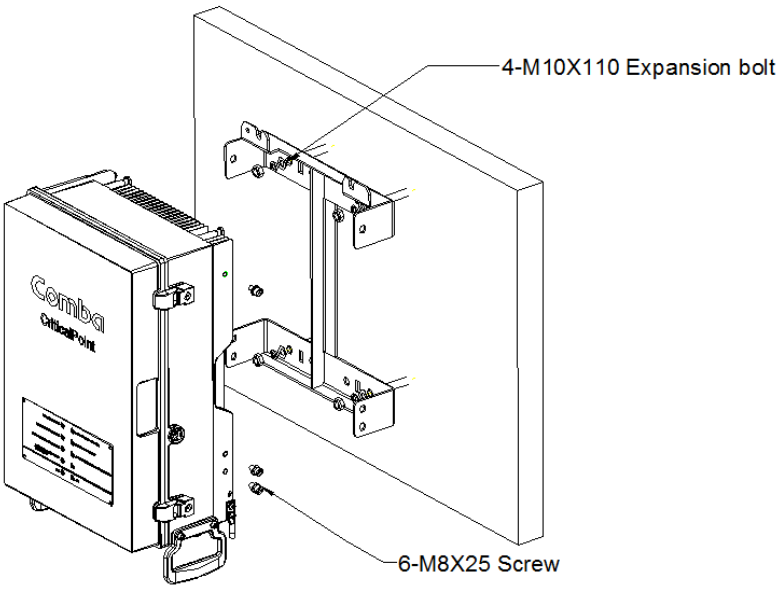

Figure 5: PS BDA Wall Mounting

3.3.5 DRIP-LOOP

Comba recommends that every horizontal cable entry to the equipment forms a 'U' before its entry to the equipment. Water on the cable will drip down at the bottom of the loop and will not accumulate at the equipment connectors.

Copyright - refer to title page

3.4 EQUIPMENT CONNECTORS

3.4.1 PS BDA CONNECTORS

The PS BDA is designed for all cable entries from the right or left of the enclosure, as shown in the following figure.

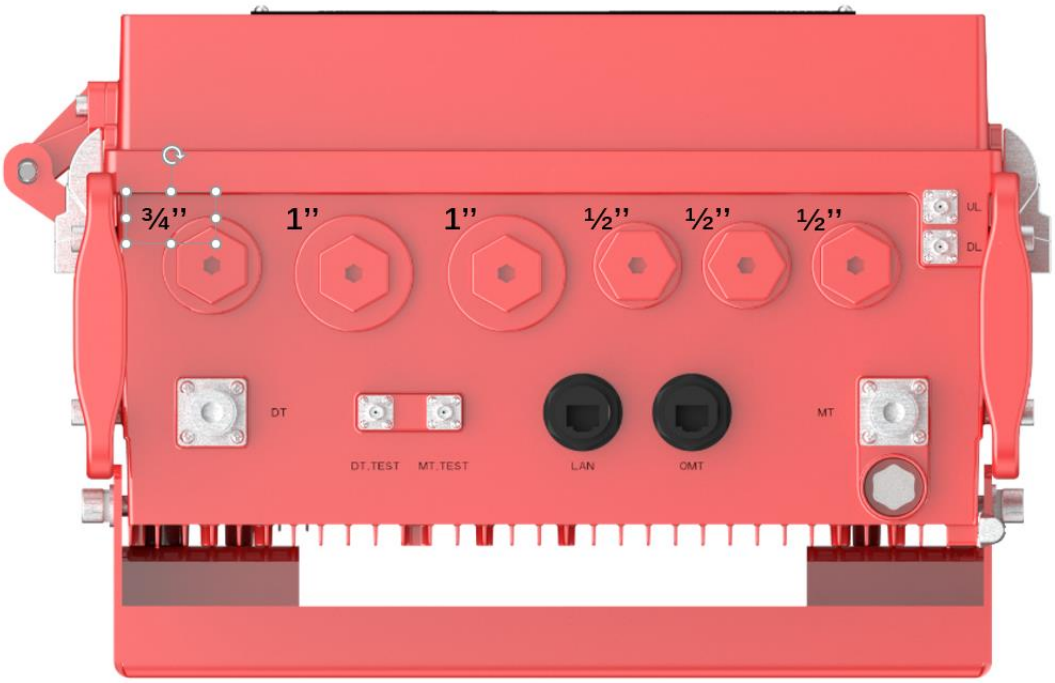

Figure 6: Equipment Connectors

Table 1: Equipment Connectors

Identifier	Descriptions
Knock Out	3/4'': For Hybrid cable (include AC cable and monitor cable from BBU) 1'': Reserved. 1/2'': For Dry contactors or External alarm cables
DT Test	SMA connector for DT port test, -28dB coupling to DT port, available for both downlink and uplink test.
MT Test	SMA connector for MT port test, -28dB coupling to MT port, available for both downlink and uplink test. *: the antenna is not provided by Comba, the connector type of the system for the antenna is N-Female.
DT	N-Female connector for connection to donor antenna.
MT	N-Female connector for connection to service antenna.
OMT	RJ45 Connector for local WEB GUI connection.
LAN	RJ45 Connector for internet connection.
UL/DL	Reserved for DAS system

Copyright - refer to title page

3.4.2 PS BDA LED INDICATORS

The LED indicators help user to check the equipment status easily.

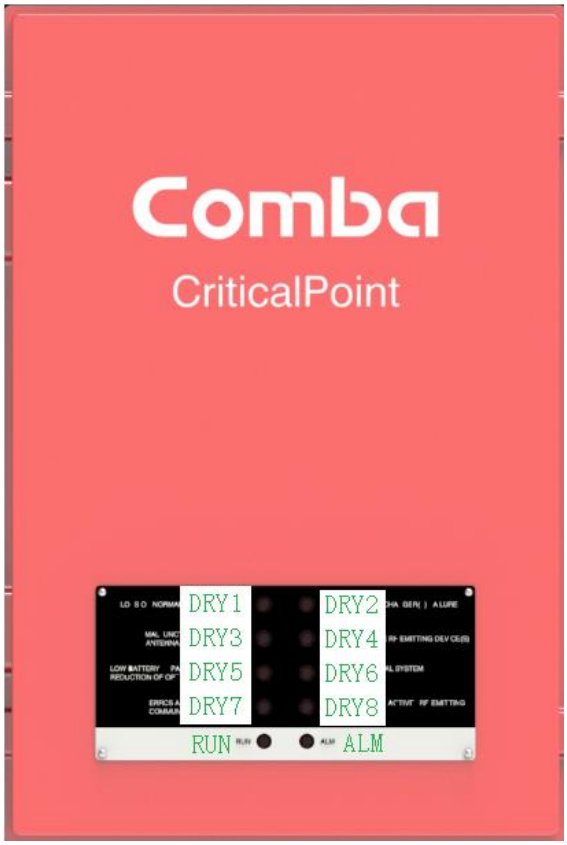

Figure 7: LED Indicators

Table 2: LED Indicators

Identifier	Colour	Indication
RUN	Green	Operation indicator, flashes every second to indicate normal operation.
ALM	Red	Alarm indicator. ON = alarm; OFF = no alarm.
DRY1	Red/Green	Green=Normal; Red=Alarm(AC power)
DRY2~8	Red	Alarm indicator. ON = alarm; OFF = no alarm.

3.4.3 GROUNDING CONNECTION

Ground Connection

To ensure safe operation of the product, a ground (earth) connection is required. For single phase AC power source, the product must be grounded by connecting the “earth wire” of the power cord to the ground terminal of the AC supply. For operating this product with DC power system (such as rectifiers), the product should not be connected to power systems that switch open the return lead because the return lead could function as the ground (earth) connection for the equipment.

Copyright - refer to title page

Protective Ground Connection

The enclosure must be grounded securely by connecting a copper wire (CSA 16mm^2) to the grounding terminal on the equipment/rack, and the other end to a protective ground (i.e. building earth point). An internationally acceptable color code of the ground connection wire is green/yellow.

Such a ground connection implements the “Protective Ground Connection”, and must be connected to the equipment at the designated ground point. In general, do not connect the supply before establishing an adequate ground (earth) connection.

Construct the ground wire, and use appropriate crimp connectors where necessary. Locate and connect the equipment grounding terminal to a protective ground (i.e. building earth point).

3.4.4 RF CABLE CONNECTION

Single band PS BDA RF cables connection is as follows:

- PS BDA MT port → Connects to the feeder cable from service antennas.
- PS BDA DT port → Connects to the feeder cable from donor antennas**.**

3.4.5 ETHERNET CONNECTION

Connect Ethernet with ‘LAN’ port in the panel.

Copyright - refer to title page

3.4.6 DRY CONTACT CABLE CONNECTION

Below please find the pin definitions of dry contact cables.

Table 3: Pin Definition of Dry Contact Cable

Pin NO.	Pin	Input	Output
ALM1			
1	CLOSE1	1(A)	Red
2	COM1	2(B)	White
3	OPEN1	3(C)	Blue
4	CLOSE2	4(D)	Black
5	COM2	5(E)	Brown
6	OPEN2	6(F)	Purple
7	RR_A	7(G)	Green
8	RR_B	8(H)	Orange
9	NC	9(J)	Yellow
10	GND	10(K)	Grey
ALM2			
11	CLOSE3	1(A)	Red
12	COM3	2(B)	White
13	OPEN3	3(C)	Blue
14	CLOSE4	4(D)	Black
15	COM4	5(E)	Brown
16	OPEN4	6(F)	Purple
17	GND	7(G)	Green
18	NC	8(H)	Orange
19	NC	9(J)	Yellow
20	NC	10(K)	Grey
AUX			
21	EXT ALM0	1(A)	Red
22	EXT ALM1	2(B)	White
23	EXT ALM2	3(C)	Blue
24	EXT ALM3	4(D)	Black
25	EXT Li+	5(E)	Brown
26	EXT Li+	6(F)	Purple
27	NC	7(G)	Green
28	GND	8(H)	Orange
29	EXT Li-	9(J)	Yellow
30	EXT Li-	10(K)	Grey

End of Section

Copyright - refer to title page

4 COMMISSIONING

4.1 PRE-COMMISSIONING TASKS

After equipment installation, perform the following steps before equipment powering and commissioning:

- Verify that the expected voltage, current and power levels do not violate any ratings.
- Visually inspect the power connection within the equipment. Ensure that the power cable is correctly and securely connected, including the grounding wire, RF cable and other cables.
- Check the grounding connection and verify that the ground resistance is less than 5Ω.
- Test the antenna system and ensure that the echo loss within working frequency is less than -14dB (VSWR<1.5).

Copyright - refer to title page

4.2 COMMISSIONING PROCEDURE

Perform the following procedures for system commissioning.

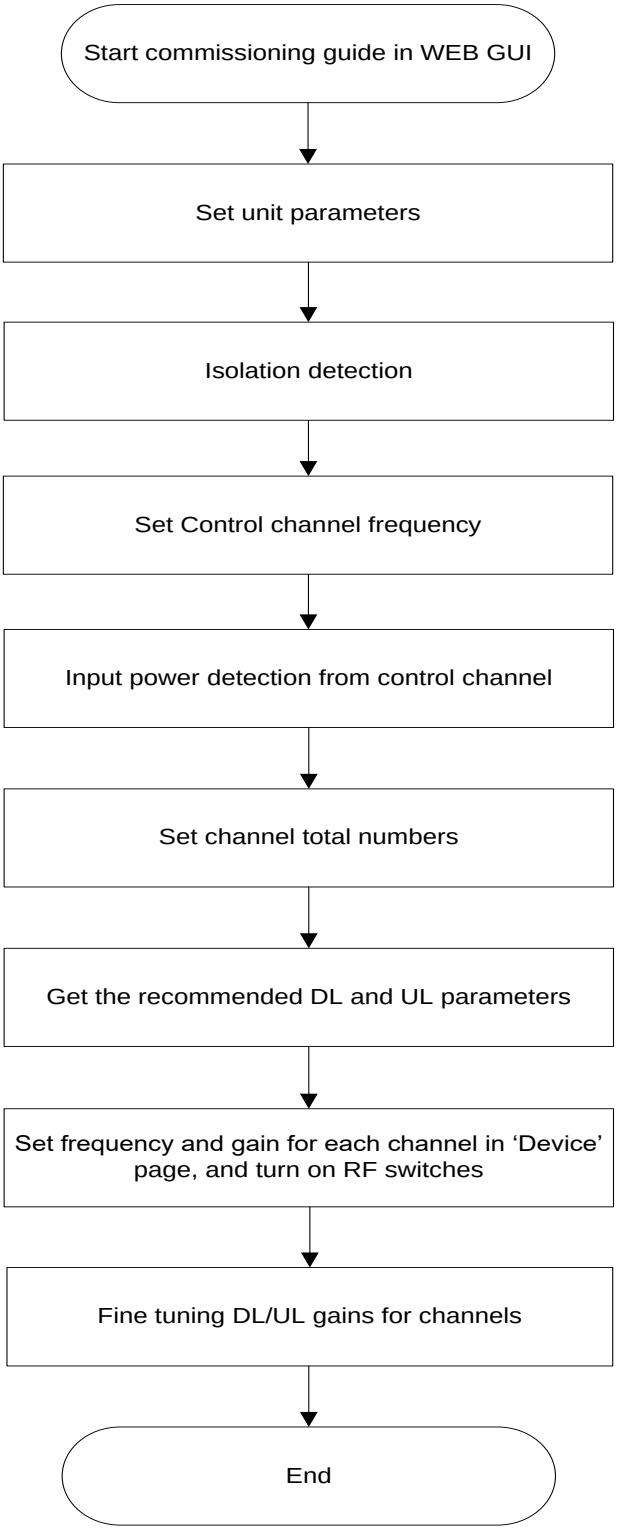

Figure 8: Commissioning Procedure

Copyright - refer to title page

Table 4: Commissioning Task Explanation

Commissioning Tasks	Observation
1. Isolation detection	● Detect isolation of service antenna and donor antenna.
2. Set control channel frequencies	● Enter the center frequency of the main control channel, the commissioning guide will provide recommended DL/UL gain settings based on main control channel input power and the total channel numbers. ● Users can skip this step and directly finish the commissioning guide even if the frequency information or the total channel numbers are unknown. Users can set the DL/UL gain manually any time after the isolation detection has been completed and passed.
3. Set Channel No.	● Enter the total channel numbers
4. Recommended DL and UL gain parameters	● The commissioning guide will provide recommended DL/UL gain settings. ● Users will still need to set all the gains manually in the “Device” pages, and the frequencies for all the independent channels in the same “Device” pages after the commissioning process is finished.

End of Section

Copyright - refer to title page

5 WEB GUI

The PS BDA can be monitored and controlled via the WEB GUI; use the following guide to finish system parameter setting and commissioning.

5.1 WEB GUI CONNECTION

Step 1: Connect the OMT port to the PC RJ45 port with the supplied RJ45 cable to set up a physical connection.

Step 2: Open a browser (browser IE7.0, IE8.0, Chrome or Firefox, suggested display resolution is 1024×768), input Web GUI **IP address: 192.168.8.101**, click [Enter].

NOTE: DHCP and DNS are also available to login to the Web GUI. The domain name is: www.combaomt.com.

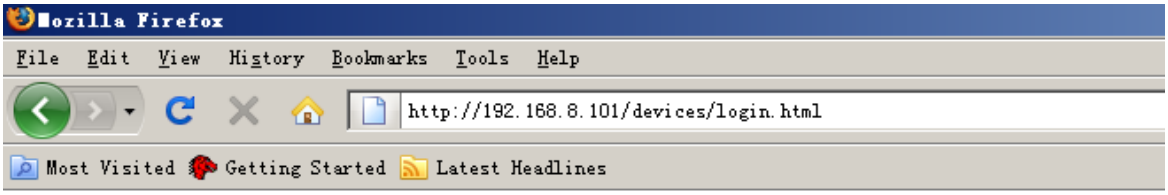

Figure 9: Input IP Address

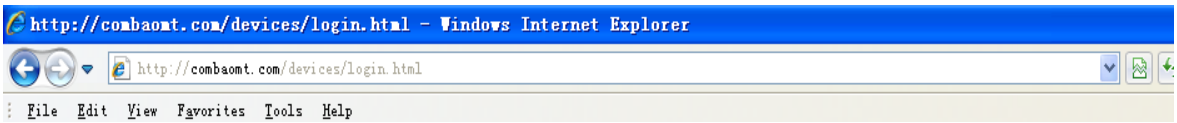

Figure 10: Input Domain Name

Step 3: Input **User Name: admin; Password** (default password: **admin**). Click [Log in].

Figure 11: Input User Name and Password

Copyright - refer to title page

5.2 WEB GUI INTRODUCTION

After log in, the Web GUI main screen will appear.

Figure 12: Web GUI Main Screen

On Comba Web GUI Home Screen, there are three Menu bars:
[Device], [Commissioning], [Tools] and [Management].

5.2.1 [DEVICE]

The [Device] Screen shows the equipment status, such as BDA overview, External/Dry Contact ALM, Internal Charger Status and Advance setting, etc.

- **Overview**

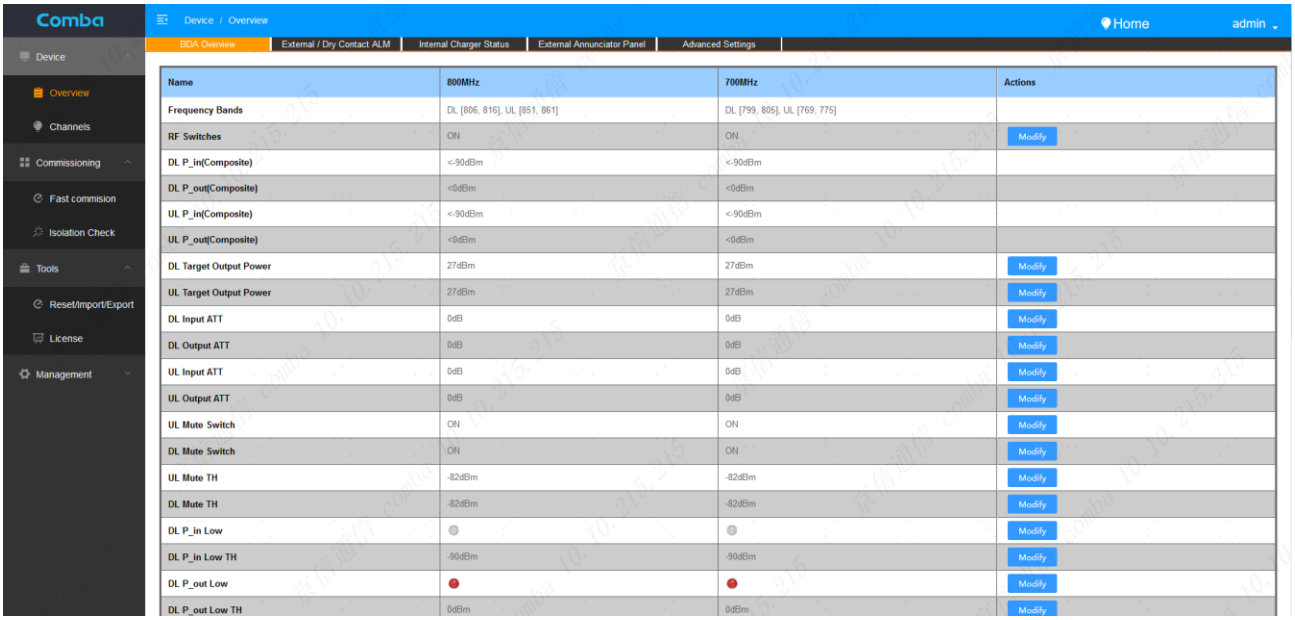

Figure 13: Overview Screen

Copyright - refer to title page

➢ External/Dry Contact ALM

This screen shows the alarm status.

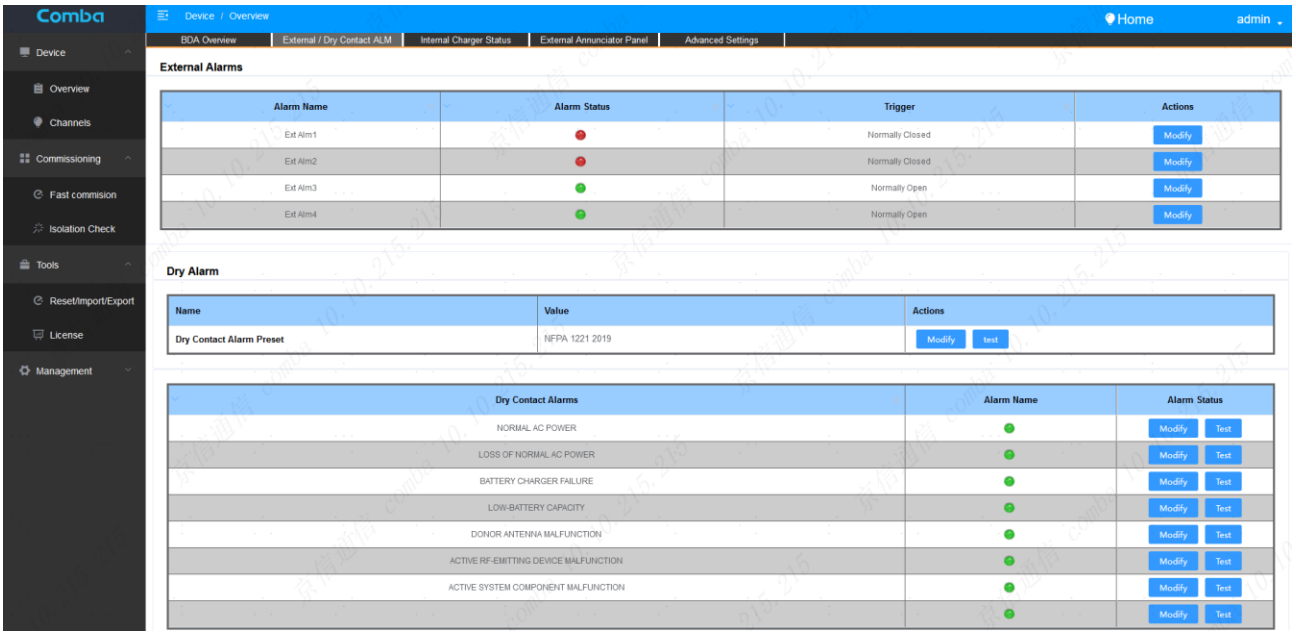

Figure 14: External/Dry Contact ALM Screen

➢ Channels

This screen is available for PS BDA to adjust the center frequency and the bandwidth.

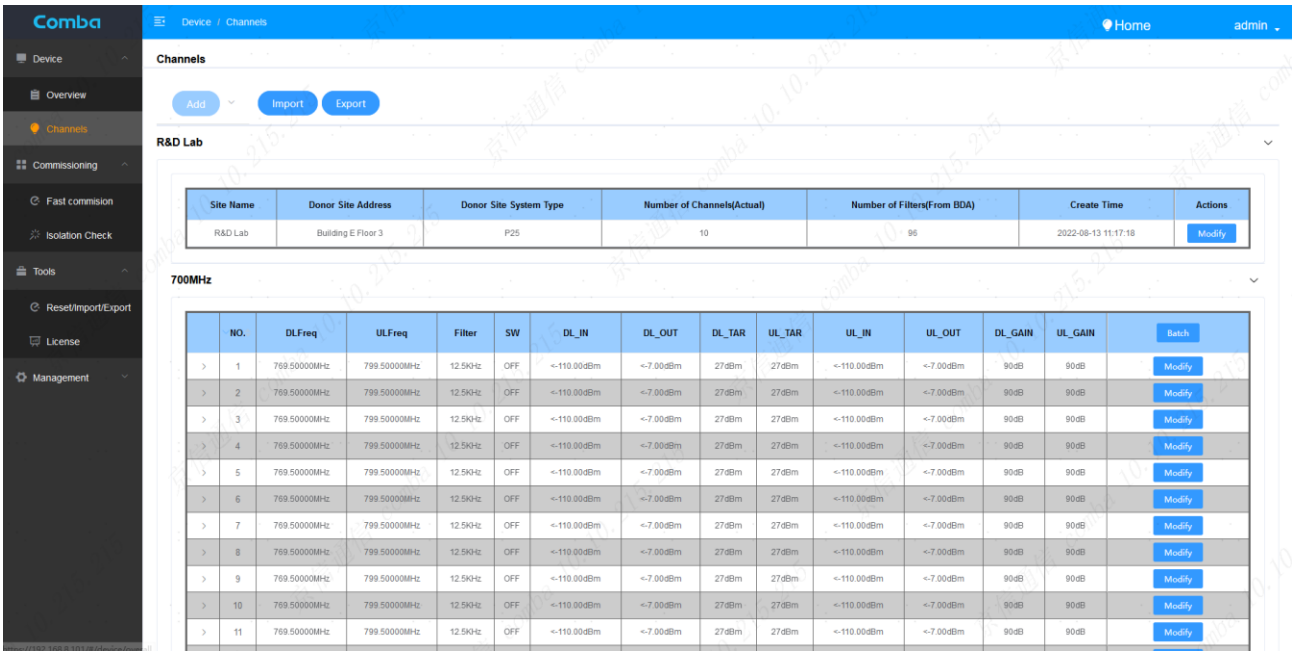

Figure 15: Channels Screen

Copyright - refer to title page

5.2.2 [COMMISSIONING]

A work flow of the commissioning process is shown on [Commissioning] Screen.

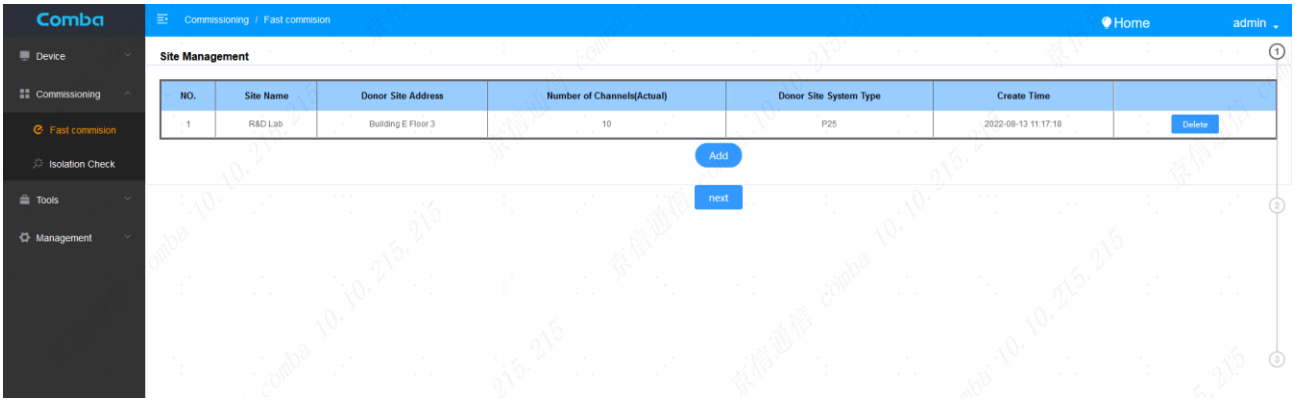

Figure 16: Fast commission Screen

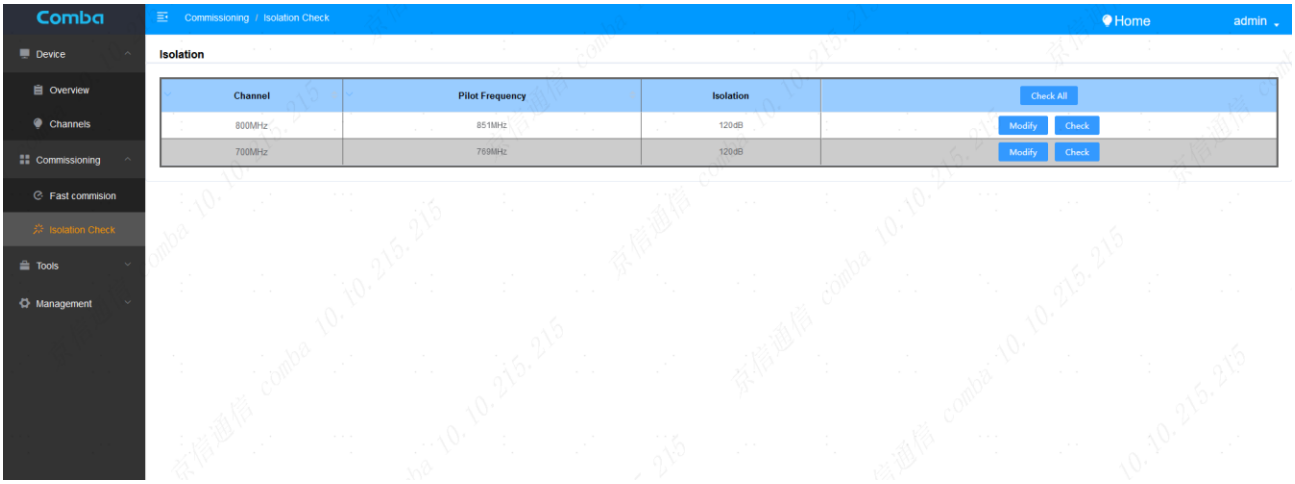

Figure 17: Isolation Check Screen

5.2.3 [TOOLS]

The [Tools] screen includes Reset/Import/Export and License.

Copyright - refer to title page

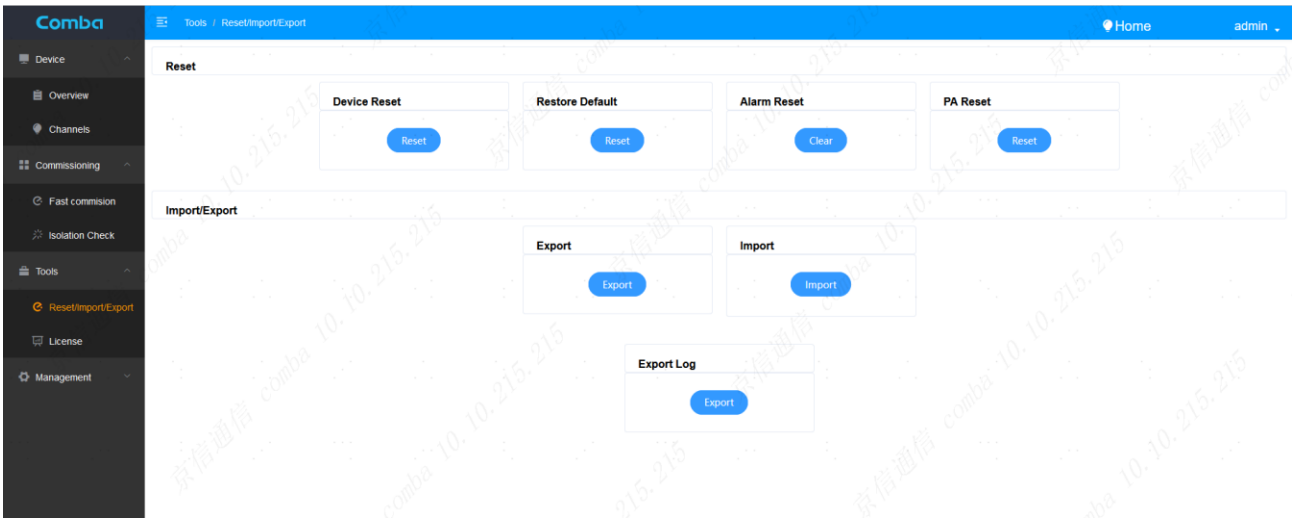

Figure 18: Reset/Import/Export Screen

Note: Click Restore, all the parameters and alarms will be reset to factory default value, or Click Reset to reset Device or PAs.

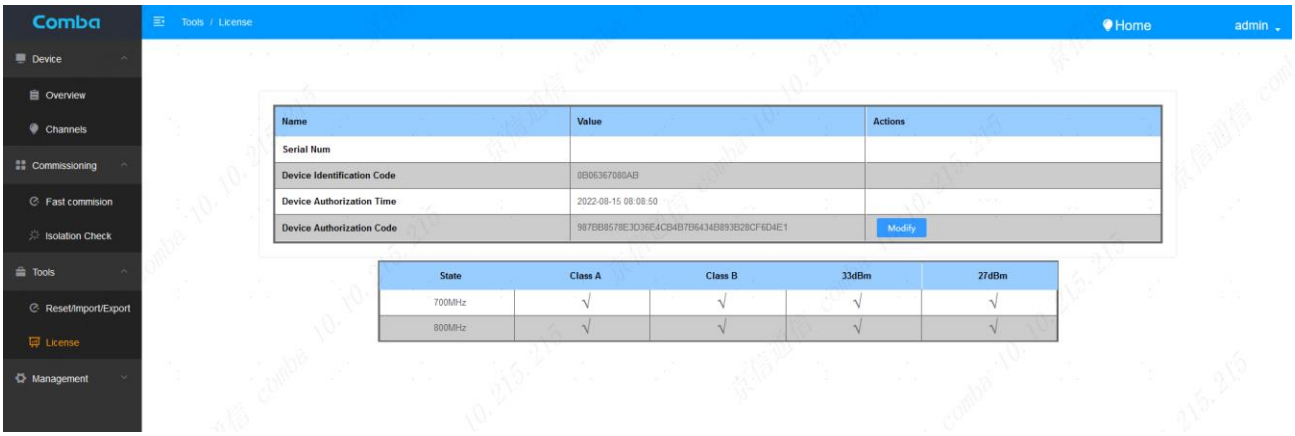

Figure 19: License Screen

For the CriticalPoint BDA, users can switch the configuration anytime by changing the license in the WEBOMT. There are 4 difference licenses: 700MHz single band license, 800MHz single band license, Class A and Class B.

Both 700MHz and 800MHz single band licenses are provided with a single band unit. Users can switch between 700MHz configuration and 800MHz configuration. To upgrade from single band to dual band, users need to purchase the dual band upgrade license.

If the equipment is in dual band originally, no license will be provided, because the equipment already comes with dual band activated.

5.2.4 [MANAGEMENT]

The [Management] screen includes Firmware Upgrade, Device Information and User Management.

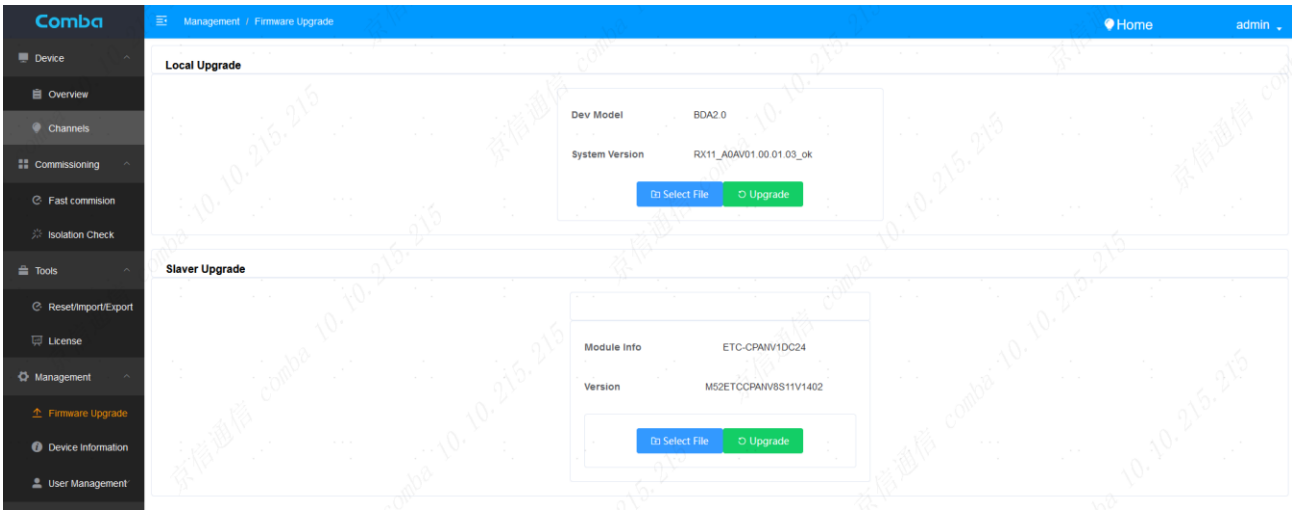

Figure 20: Firmware Upgrade Screen

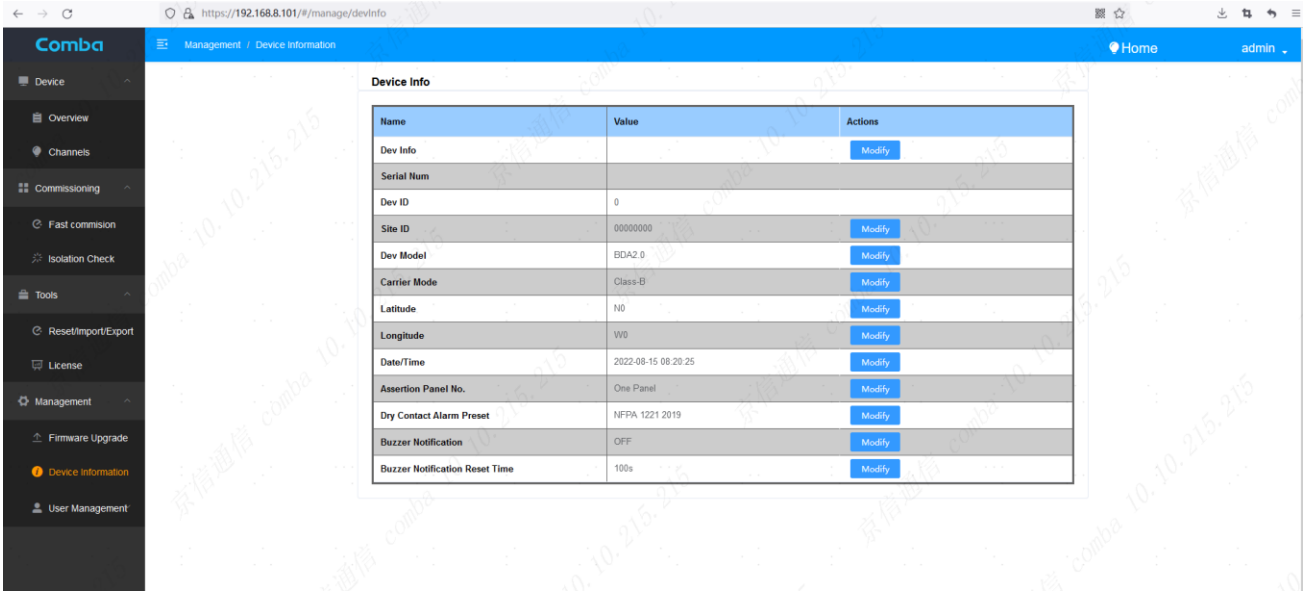

Figure 21: Device Information Screen

Copyright - refer to title page

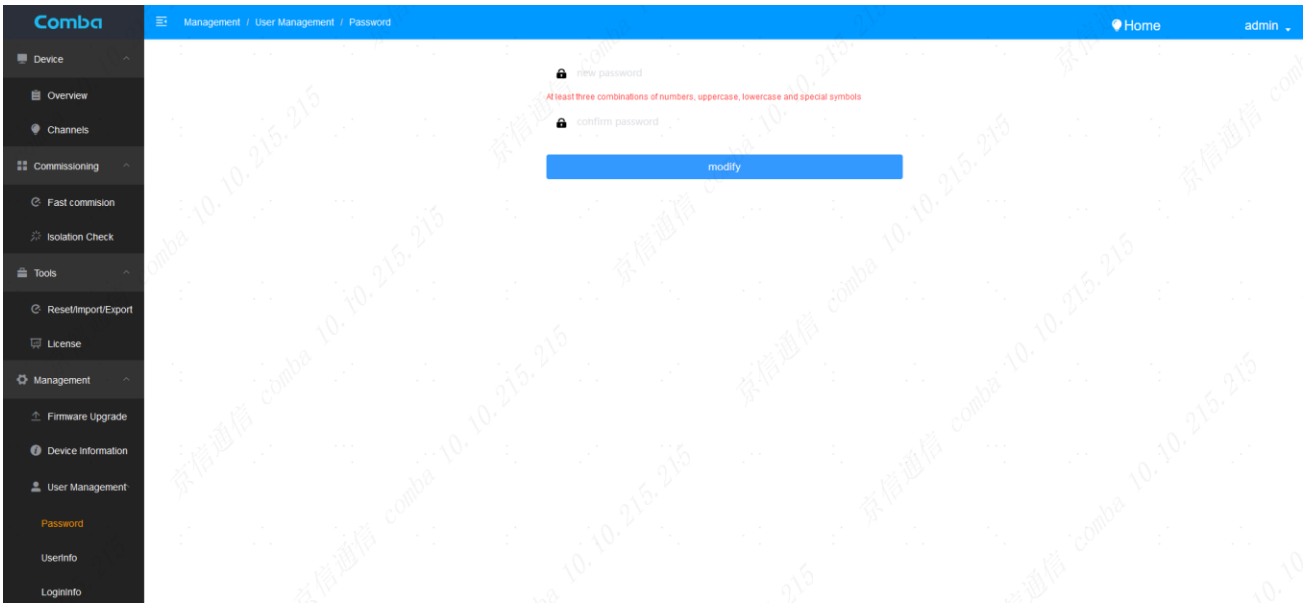

Figure 22: User Management Screen

End of Section

Copyright - refer to title page

6 MAINTENANCE

The PS BDA is designed for trouble-free operation and generally does not need maintenance. Maintenance activities should only be carried out by trained personnel.

Periodic inspection of the repeater equipment(s) is recommended, the recommended tasks includes:

- Verify the direction and position of antennas. Re-align if necessary.
- Make sure the cable connector and sealing on the RF cable connectors are not damaged.
- Verify lightning and grounding protection is in good condition.

End of Section

Copyright - refer to title page

7 APPENDICES

7.1 APPENDIX A: TOOLS

The following are the recommended list of tools for new installation and routine maintenance.

- Slotted Screwdriver
- Philips Screwdriver
- Ring Spanner (Assorted size: 12~20mm)
- Electrically operated drill and masonry drill bits ∅12mm
- Anti-static Wrist Strap
- Side Cutter
- Frequency Counter (e.g. FLUKE PM6685R)
- RF Power Meter (e.g. Bird 5000)

Copyright - refer to title page

7.2 APPENDIX B: DECLARATION OF HARMFUL SUBSTANCES AND CONTENT

Product Name: Public Safety BDA

Model: RX-7W22

Harmful substance and content of this product as below table shown:

Part Name	Harmful Substance					
	Pb	Hg	Cd	Cr (VI)	PBB	PBDE
A	×	○	○	○	○	○
B	×	○	○	○	○	○

Note: Above table complies with SJ/T 11364.

○: Indicates that the harmful substance content in all homogeneous materials for corresponding part is under the limited requirement of GB/T 26572.

×: Indicates that the harmful substance content in at least one single homogeneous material for the corresponding part exceeds the limited requirement of GB/T 26572.

Remark: The content of the parts marked with "×"above exceeds the requirement as there is still no mature alternative technologies to achieve the replacement of poisonous and harmful materials or elements.

Copyright - refer to title page

7.3 APPENDIX C: TROUBLESHOOTING QUICK GUIDE

Alarm list:

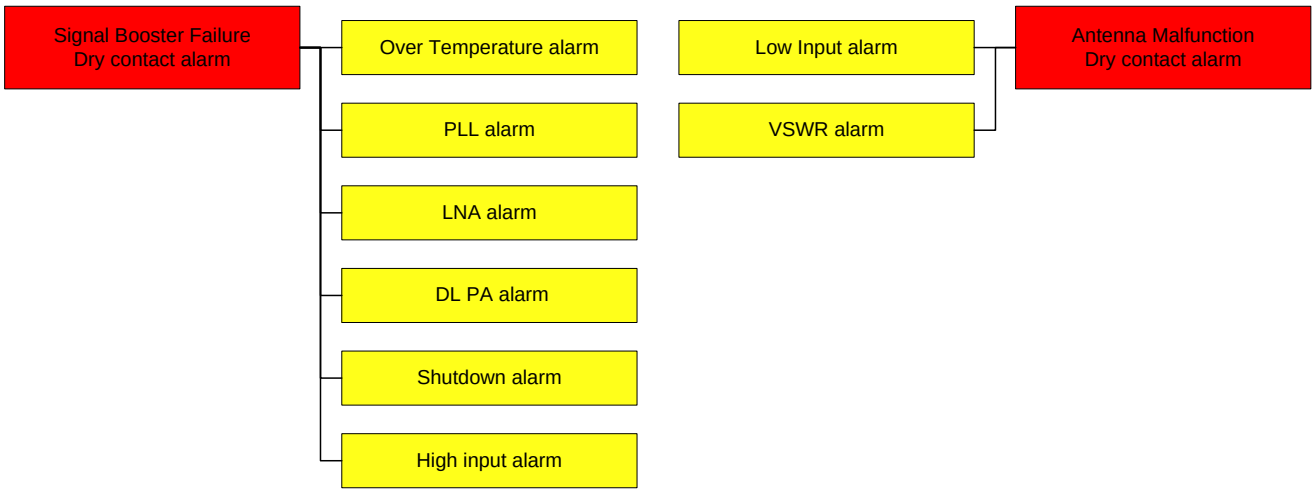

Figure 23: Alarm list

Troubleshooting:

Alarms	Causes and actions
Low input (for DT port)	DT composite input power lower than -80dBm will trigger the alarm 1. Donor antenna/passive system failure 2. Wrong channel frequency setting 3. Site is not commissioned yet
VSWR	Service antenna/passive system failure
Over temperature	Environment temperature shall be lower than 140degF (60degC)
PLL (Phase lock loop)	Hardware failure, RMA the equipment
LNA (Low noise amp.)	Hardware failure, RMA the equipment 1. Handling RF connectors when RF power is ON may damage LNA 2. High power injection to DT/MT port may damage LNA
DL PA (Downlink amp.)	Fix any other existing alarms first, then reset PA (see next page) If alarm still exists, RMA the equipment
Shutdown	Other critical alarm causes the equipment shutdown Follow instructions to fix other alarms first
High input (for DT port)	Check input power to DT port, the power shall be lower than -30dBm 1. Avoid other inference 2. Put attenuator between antenna and PS BDA, if donor signal is high

Copyright - refer to title page

Reset PA:
The Downlink PA will try to automatically reboot during the first 2 hours after alarms occur and then may shutdown permanently if alarms still exist. Users need to manually reset the PA in WEBOMT after fixing the alarm.

Go to Management -> Device Reset: Click the Reset button at the lower table to reset DL PA for 800MHz or 700MHz

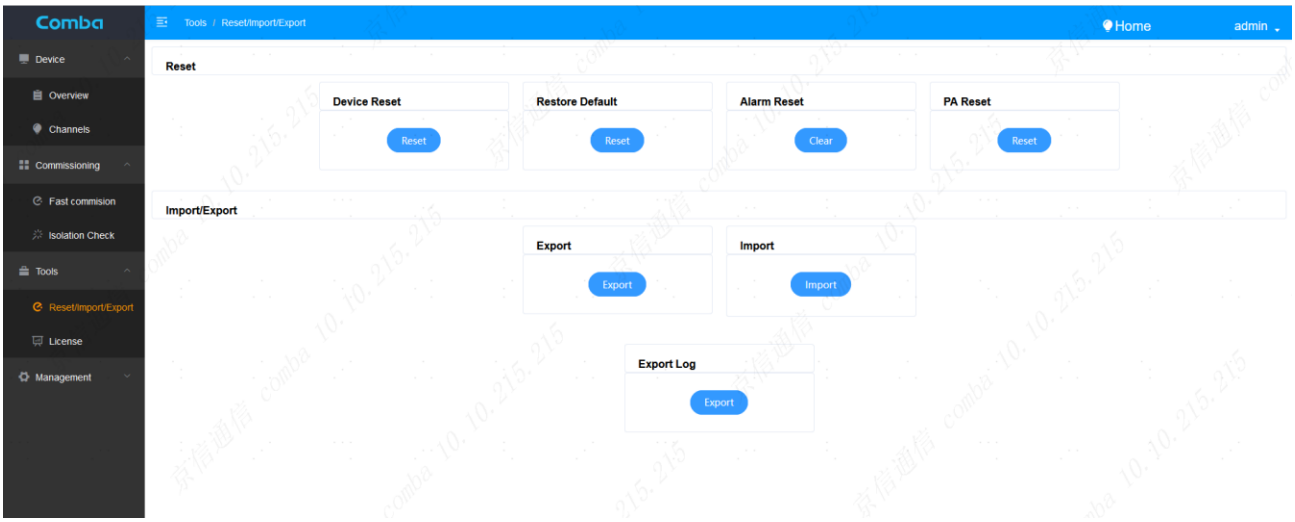

Figure 24: Reset PA

Power detection:

- The power detection can be done from the reading number in WEBOMT, available in:
  - Downlink input power (per channel)
  - Downlink output power (composite)
  - Uplink input power (per channel)
- Or from the test ports for DT/MT, which are 27dB lower than the DT/MT port respectively, the test ports are able to detect both DL and UL signals

Isolation:

The system doesn't allow users to set a gain higher than **isolation-20dB**. The PS BDA has a mandatory process to check the isolation during commissioning, when isolation is not good (lower than 120dB, even though the PS BDA passes the commissioning process), a check on isolation (between donor and service antennas) is always recommended.

The maximum system gain that can be set must be 20dB lower than the isolation. (For example, if the isolation is 110dB, then the maximum gain that can be set is 90dB.) The PS BDA has an automatic process that prevents the gain being set to a value that does not follow this parameter.

If this gain is insufficient, then the isolation situation must be corrected to provide a higher isolation value.

Safety operation to protect the LNA (low noise amplifier):

1. Connect RF cables before powering on.
2. Any changes or handling of the RF connection requires user to switch off RF power (RF switch off in WEBOMT) or power off the unit first.

Copyright - refer to title page

7.4 APPENDIX D: DEVICE REPORT EXAMPLE

Device Report

Created Time: 10:47:37 08/17/16

Table1 Basic Info

Dev Model	RX-7W22	Dev Info	
Site ID	00000000	Firmware Version	M75RX7W22FH10V8201
Uptime	1:41:44 0/0/0	RF Unit Alm	Normal
Temperature	37	Over Temperature Alm	Normal
Serial Num	T201605190001		

Table2 Overview RF Info

Slave	Freq Band	DL P_out	RF Switch	PLL	LNA	DL PA	VSWR	High Input	Low Input	Shutdown	PA Status	Isolation
1	800(MHz)	-2dBm	ON	Normal	Normal	Normal	Normal	Normal	Disable	Normal	Normal	120dB
2	700(MHz)	26dBm	ON	Normal	Normal	Normal	Normal	Normal	Disable	Normal	Normal	120dB

Table3 Sub Band RF Info

Freq Band	Sub Band	Center Freq	BandWidth	DL P_in	UL P_in	Switch	UL ATT	DL ATT	UL Gain	DL Gain
800(MHz)	1	851.00625MHz	25KHz	-64.8dBm	-112dBm	ON	28dB	28dB	62dB	62dB
	2	860.00625MHz	12.5KHz	-106dBm	-112dBm	OFF	30dB	30dB	60dB	60dB
	3	868.99375MHz	12.5KHz	-106dBm	-112dBm	OFF	30dB	30dB	60dB	60dB
	4	851.15625MHz	12.5KHz	-106dBm	-112dBm	OFF	30dB	30dB	60dB	60dB
	5	851.30625MHz	12.5KHz	-106dBm	-112dBm	OFF	30dB	30dB	60dB	60dB
	6	851.45625MHz	12.5KHz	-106dBm	-112dBm	OFF	30dB	30dB	60dB	60dB
	7	859.85625MHz	12.5KHz	-106dBm	-112dBm	OFF	30dB	30dB	60dB	60dB
	8	860.15625MHz	12.5KHz	-106dBm	-112dBm	OFF	30dB	30dB	60dB	60dB
	9	860.30625MHz	12.5KHz	-106dBm	-112dBm	OFF	30dB	30dB	60dB	60dB
	10	868.54375MHz	12.5KHz	-106dBm	-112dBm	OFF	30dB	30dB	60dB	60dB
	11	868.69375MHz	12.5KHz	-106dBm	-112dBm	OFF	30dB	30dB	60dB	60dB
	12	868.84375MHz	12.5KHz	-106dBm	-112dBm	OFF	30dB	30dB	60dB	60dB
	13	852.00625MHz	12.5KHz	-106dBm	-112dBm	OFF	30dB	30dB	60dB	60dB
	14	853.00625MHz	12.5KHz	-106dBm	-112dBm	OFF	30dB	30dB	60dB	60dB
	15	854.00625MHz	12.5KHz	-106dBm	-112dBm	OFF	30dB	30dB	60dB	60dB
	16	855.00625MHz	12.5KHz	-106dBm	-112dBm	OFF	30dB	30dB	60dB	60dB
	17	856.00625MHz	12.5KHz	-106dBm	-112dBm	OFF	30dB	30dB	60dB	60dB
	18	857.00625MHz	12.5KHz	-106dBm	-112dBm	OFF	30dB	30dB	60dB	60dB
	19	858.00625MHz	12.5KHz	-106dBm	-112dBm	OFF	30dB	30dB	60dB	60dB
	20	859.00625MHz	12.5KHz	-106dBm	-112dBm	OFF	30dB	30dB	60dB	60dB
	21	861.00625MHz	12.5KHz	-106dBm	-112dBm	OFF	30dB	30dB	60dB	60dB
	22	862.00625MHz	12.5KHz	-106dBm	-112dBm	OFF	30dB	30dB	60dB	60dB
	23	863.00625MHz	12.5KHz	-106dBm	-112dBm	OFF	30dB	30dB	60dB	60dB
	24	864.00625MHz	12.5KHz	-106dBm	-112dBm	OFF	30dB	30dB	60dB	60dB
	25	865.00625MHz	12.5KHz	-106dBm	-112dBm	OFF	30dB	30dB	60dB	60dB
	26	866.00625MHz	12.5KHz	-106dBm	-112dBm	OFF	30dB	30dB	60dB	60dB
	27	867.00625MHz	12.5KHz	-106dBm	-112dBm	OFF	30dB	30dB	60dB	60dB
	28	868.00625MHz	12.5KHz	-106dBm	-112dBm	OFF	30dB	30dB	60dB	60dB
	29	864.50625MHz	12.5KHz	-106dBm	-112dBm	OFF	30dB	30dB	60dB	60dB
	30	865.50625MHz	12.5KHz	-106dBm	-112dBm	OFF	30dB	30dB	60dB	60dB
	31	866.50625MHz	12.5KHz	-106dBm	-112dBm	OFF	30dB	30dB	60dB	60dB
	32	867.50625MHz	12.5KHz	-106dBm	-112dBm	OFF	30dB	30dB	60dB	60dB

Current Page:1 (Total Pages:2)

Copyright - refer to title page

7.5 APPENDIX E: RMA (RETURN MATERIAL AUTHORIZATION)

Comba Telecom Ltd.

611 East Wing, No. 8 Science Park West Avenue, Hong Kong Science Park,Tai Po, Hong Kong
Tel: +852 2636 6861 Fax: +852 2637 0966

RMA Request Form

Date: _____

From: _____
Address:
Tel: Fax:
E-Mail:
ATTN:

Product Information:

Item	Model	Serial Number	Return Category	Qty	Problem Description
1					
2					
3					
4					
5					
6					
7					
8					
9					
10					

Notes:

1. For 'Return Category' column, please select from **A**: Return of Defective Product, **B**: Return of Trial Sample, or **C**: Return of New and Unused Product.
2. If **A** or **C** category of return product is chosen, please give short description of the problem or reason for returning.

Transportation Information:

Location of Product: _____
Transportation Method: _____
Shipping Forwarder: _____

Note: **Location of Product'** must be stated, while '**Transportation Method**' or '**Shipping Forwarder**' can be left blank if not determined.

Signature:

_____

For Comba Use (Only)
Return Merchandise Authorization Number (RMA#):
Recommended Action:
Shipment and Handling Cost to be paid by:

Approved by:

_____ **Date:** _____

End of Section

End of Document

Copyright - refer to title page

Comba

Comba Telecom Inc.

568 Gibraltar Drive, Milpitas, CA 95035
Tel: +1 866 802 7961
Fax: +1 408 526 0181
Email: customer.nam@comba-telecom.com

www.combausa.com