L140 Series Rugged Laptop

Quick Start Guide

Download Center

Document Version 1.0
Document Part No. 9152140K1000

https://dc.winmate.com

Please read these instructions carefully before using this product, and save this manual for future use.

Contents

Preface **2**
Chapter 1: Getting Started **6**
1.1 Overview 6
1.2 Package Content 6
1.3 Product Overview 7
1.4 Mechanical Dimension 11
1.5 Hardware Installation 11
1.5.1 Side Expansion Area 11
1.5.2 Installing a Micro SD Card 13
1.6 Battery 14
1.6.1 Installing and Removing the Batteries 14
1.6.2 Important Battery Tips 15
1.7 Turning On/Off 16
1.7.1 Turning On the Computer 16
1.7.2 Turning Off the Rugged Laptop 17
Appendix **18**
Appendix A: Declaration of Conformity (DoC) 18

Preface

Advisory Conventions

Four types of advisories are used throughout the user manual to provide helpful information or to alert you to the potential for hardware damage or personal injury. These are Notes, Important, Cautions, and Warnings. The following is an example of each type of advisory.

Note:
A note is used to emphasize helpful information

Important:
An important note indicates information that is important for you to know.

Caution A Caution alert indicates potential damage to hardware and explains how to avoid the potential problem.

Warning! An Electrical Shock Warning indicates the potential harm from electrical hazards and how to avoid the potential problem.

Alternating Current! The Protective Conductor Terminal (Earth Ground) symbol indicates the potential risk of serious electrical shock due to improper grounding.

Safety Information

General Product Safety
Sécurité générale des produits

- Do not block any ventilation openings. Do not place the product against a wall or in an enclosed space as doing so might impede the flow of cooling air.
- *[FR] Ne pas bloquer les ouvertures de ventilation. Ne pas placer le produit contre un mur ou dans un espace clos de façon à entraver la circulation de l'air de refroidissement.*

- Do not place the product near any heat sources such as radiators, warm air intakes, stoves or other heat-generating devices (including amplifiers or other heat producing equipment).
- *[FR] Ne pas placer le produit près d'une source de chaleur comme des radiateurs, les arrivées d'air chaud, poêles ou autres produits générant de la chaleur (y compris les amplificateurs ou autre équipement produisant de la chaleur.)*

- Protect the power cord from being crushed or pinched, particularly in the area of the plugs, any receptacles used, and the point of exit from the apparatus. Do not break off the ground pin of the power cord.
- *[FR] Empêcher le cordon d'alimentation d'être écrasé ou pincé, en particulier dans les zones de prises, des containers utilisés, et du point de sortie de l'appareil. Ne pas casser la broche de terre du cordon d'alimentation.*

- Do not disregard the safety that a polarized or grounded connection can provide. A polarized connection consists of two plugs, one of which is larger than the other. A grounded connection has two blades and a third one that is grounded. If the main plug provided cannot be inserted into your outlet, consult an electrician to replace your obsolete outlet.
- *[FR] Ne pas ignorer la sécurité qu'une prise polarisée ou une prise de terre peut prévoir. Une prise polarisée se compose de deux fiches, dont l'une est plus large que l'autre. Une prise de terre possède deux lames et une troisième qui est la terre. Si la fiche principale fournie ne peut être insérée dans votre prise, consultez un électricien pour remplacer votre prise obsolète.*

- Use only accessories specified by the manufacturer.
  [FR] Utiliser uniquement les accessoires spécifiés par le fabricant.

- This product should not be used near water such as bathtubs, sinks, swimming pools, wet basement, etc.
- *[FR] Ce produit ne dois pas être utilisé près de l'eau comme les baignoires, les éviers, les piscines, les sous-sols humides, etc.*

- Use only with its transport carriage, stand, tripod, console or table specified by the manufacturer or sold with the product. When using a carriage, move the carriage assembly with the product carefully to avoid damage from falling over.
- *[FR] Utiliser uniquement avec son chariot de transport, support, trépied, console ou table spécifiés par le fabricant ou vendu avec le produit. Lors de l'utilisation d'un charriot, déplacez l'ensemble chariot avec le produit avec soin pour éviter tout dommage de chute.*

- Unplug this apparatus during lightning storms or when it is not being used for long periods.
- *[FR] Débrancher cet appareil durant les orages ou lorsqu'il n'est pas utilisé pendant de longues périodes.*

- Refer all servicing to qualified service personnel. A technical intervention is required when the apparatus has been damaged in any way, for example if the power cord or plug is damaged, liquid has been spilled or objects have fallen inside the unit, if the product has been exposed to rain or moisture, if it does not operate normally or if it has been dropped.
- *[FR] Confier toute réparation à du personnel qualifié. Une intervention technique est nécessaire lorsque l'appareil a été endommagé de quelque façon, par exemple si le cordon d'alimentation ou la fiche est endommagé, du liquide a été renversé ou des objets sont tombés à l'intérieur de l'unité, si le produit a été exposé à la pluie ou à l'humidité, s'il ne fonctionne pas normalement ou s'il a été jeté.*

General Guideline
Directive générale

It is recommended to reboot the device when some functions are defect or inactive. If it still can't solve the problems, please contact your dealer or agent.
Il est recommandé de redémarrer l'appareil lorsque certaines fonctions sont défectueuses ou inactives. Si le problème persiste, veuillez contacter votre revendeur ou votre agent.

Handling and Maintenance

General Guideline
Guide Général

Keep the product at least 13 cm (5 inches) away from electrical appliances that can generate a strong magnetic field such as TV, refrigerator, motor, or a large audio speaker.
[FR] Garder le produit au moins à 13 cm (5 pouces) de distance des appareils électriques qui peuvent générer un fort champ magnétique comme une télévision, un réfrigérateur, un moteur, ou un important haut-parleur.

Do not place heavy objects on top of the computer as this may damage the display.
[FR] Ne pas placer d'objets lourds sur le dessus de l'ordinateur cela peut endommager l'écran.

The screen surface can be easily scratched. Use with care. Do not use paper towels to clean the display but use the included cleaning cloth. Avoid touching it with a pen or pencil.
[FR] La surface de l'écran peut être facilement rayée. Utiliser avec précaution. Ne pas utiliser de serviette en papier pour nettoyer l'écran mais utiliser le chiffon de nettoyage inclus. Éviter de toucher avec un stylo ou un crayon.

To maximize the life of the backlight in the display, allow backlight to automatically turn off as a result of power management. Avoid using a screen saver or other software that prevents the power management from working.
[FR] Pour maximiser la durée de vie du rétroéclairage de l'écran, autoriser le rétroéclairage résultant de la gestion de l'alimentation. Éviter d'utiliser un économiseur d'écran ou un autre logiciel empêchant la gestion de l'alimentation de fonctionner.

Cleaning Guideline
Guide de nettoyage

Use a soft cloth moistened with water or a non-alkaline detergent to wipe the exterior of the product.
[FR] Utiliser un chiffon doux humidifié avec de l'eau ou un détergeant non alcalin pour essuyer l'extérieur du produit.

Gently wipe the display with a soft, lint-free cloth. Do not use alcohol or detergent on the product.
[FR] Essuyer délicatement l'écran avec un chiffon doux non pelucheux. Ne pas utiliser d'alcool ou un détergent sur le produit.

Touchscreen Guideline
Guide de l'écran tactile

Use your finger or the stylus on the display. Using sharp or metallic object may cause scratches and damage the display, thereby causing errors.
[FR]Utiliser votre doigt ou le stylet sur l'écran. L'utilisation d'un objet pointu ou métallique peut provoquer des rayures.

Use a soft cloth to remove dirt on the display. The touchscreen surface has a special protective coating that prevents dirt from sticking to it. Not using a soft cloth may cause damage to the special protective coating on the touchscreen surface. To clean off hard to remove dirt, blow some steam on the particular area and gently wipe away using a soft cloth.
[FR]Utiliser un chiffon doux pour enlever la poussière sur l'écran. La surface de l'écran tactile a un revêtement protecteur spécial empêchant la saleté de se coller à lui. Ne pas utiliser un chiffon doux peut endommager le revêtement spécial sur la surface de l'écran tactile. Pour nettoyer les saletés plus difficiles à enlever, souffler de la buée sur la zone particulière et essuyer doucement avec un chiffon doux.

Do not use excessive force on the display. Avoid placing objects on top of the display as this may cause the glass to break.
[FR]Ne pas utiliser une force excessive sur l'écran. Éviter de placer des objets au dessus de l'écran cela pourrait provoquer une cassure du verre.

When there is a noticeable discrepancy in the operation of the touchscreen function (your touch does not correlate to the proper location on the screen), recalibrate the touchscreen display.
[FR]Lorsqu'il y a un écart sensible dans le fonctionnement de l'écran tactile (votre contact ne correspond pas à la bonne position sur l'écran), recalibrer l'écran tactile.

Copyright Notice

No part of this document may be reproduced, copied, translated, or transmitted in any form or by any means, electronic or mechanical, for any purpose, without the prior written permission of the original manufacturer.

Trademark Acknowledgement

Brand and product names are trademarks or registered trademarks of their respective owners.

Disclaimer

Winmate Inc. reserve the right to make changes, without notice, to any product, including circuits and/or software described or contained in this manual in order to improve design and/or performance. We assume no responsibility or liability for the use of the described product(s) conveys no license or title under any patent, copyright, or masks work rights to these products, and make no representations or warranties that these products are free from patent, copyright, or mask work right infringement, unless otherwise specified. Applications that are described in this manual are for illustration purposes only. We make no representation or guarantee that such application will be suitable for the specified use without further testing or modification.

About This User Manual

This User Manual provides information about using the Winmate® L140 Series Rugged Laptop.

The documentation set for the Winmate® RG100 Radio Gateway provides information for specific user needs and includes:

- **L140 Rugged Laptop Quick Start Guide** - describes how to get the computer up and to run.
- **L140 Rugged Laptop User Manual** – contains a detailed description of how to use the device, its components, and features using the default setting.

Note:

Some pictures in this guide are samples and can differ from the actual product.

Chapter 1: Getting Started

1.1 Overview

Congratulations on purchasing Winmate® L140 Series Rugged Laptop.

Winmate Rugged Laptop features with

- Fanless cooling system.
- Flip design for quick switching between laptop and tablet modes.
- Easy-replaceable design for keyboard.
- Removeable hard handle for easy carrying
- Dual battery with hot-swappable design for whole-day-work.
- Expansion slot supports optional 2nd removable SSD and smart card reader.

1.2 Package Content

Carefully remove the box and unpack your device. Please check if all the items listed below are inside your package. If any of these items are missing or damaged contact us immediately.

Factory shipment list:

- **Rugged Laptop**

Varies by product specifications

- **Quick Start Guide (Hardcopy)**

Part No. 9152140K1000

- **Adapter**

Part No. 9220065W19V1

- **Power Cord**

Varies by country

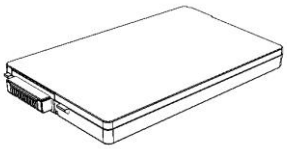

- **Standard Batteries x 2**

Part No. 32000000001V

1.3 Product Overview

This section contains mechanical drawing of the L140 Series Rugged Laptop. Notice that this is a simplified drawing and some components are not marked in detail.

Front Components

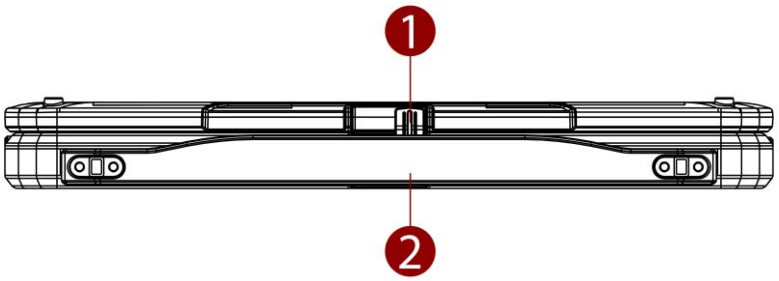

No	Item	Description
1	Top cover latch	Locks the top cover.
2	Detachable carrying handle	Provides a convenient way to carry the computer. Do not use the handle if the handle is worn or damaged.

Rear Components

No	Item	Description
3	360° hinge	Quickly turn the device from a laptop into a touch-enabled tablet PC.

Right-side Components

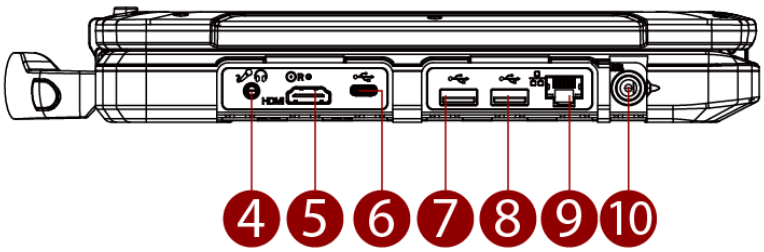

No	Item	Description
4	Audio Jack	Connects a set of headphones or headset. (Mic is only supported with 3.5mm 4-pin headset).
5	HDMI	Connects a HDMI monitor or TV set.
6	USB Type-C	High speed USB port connects to USB devices, such as USB flash drive, mouse, keyboard, printer, etc. **Note:** The USB Type-C connector follows USB 3.0 standard, which does not support Alternate Mode (ALT) or USB Power Delivery (USB-PD).
7	USB Type-A	USB 3.0 port connects to USB devices, such as USB flash drive, mouse, keyboard, printer, etc.
8	USB Type-A	USB 3.0 port connects to USB devices, such as USB flash drive, mouse, keyboard, printer, etc.
9	RJ45 Connector	Connects the LAN cable.
10	Power Jack	DC power input jack.

Left-side Components

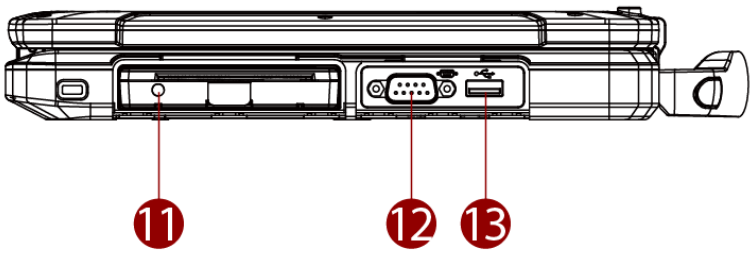

No	Item	Description
11	Expansion Area	Reserved expansion slot for customization. Either for smart card reader that accepts a smart card for additional security feature. Or for solid-state drive, which is the mass storage device of the computer. Or USB 3.0 x 1 or PCI-E x 4 or Power 5V/1A.
12	RS232	Interface that enables the connection of a serial device to a computer.
13	USB Type-A	USB 2.0 port connects to USB devices, such as USB flash drive, mouse, keyboard, printer, etc.

Top-open Components

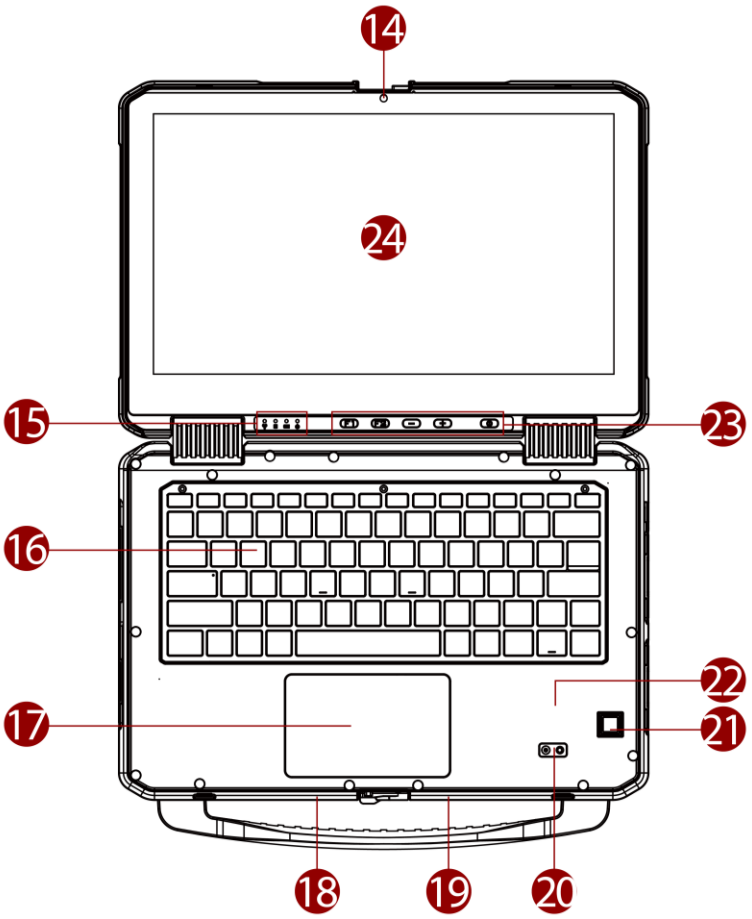

No	Item	Description
14	Front Camera	2 Megapixel Webcam.
15	LED Indicators	Show the current status of the Battery.
16	Qwerty Keyboard with backlight	Serves as the data input device.
17	Touch Pad	Serves as the pointing device of the computer.
18	Docking Connector (Optional)	Port to docking solutions such as vehicle docking.
19	Antenna Passthrough (Optional)	To enhance wireless connections GPS, WLAN, WWAN via powerful high-gain antennas.
20	Rear Camera (Optional)	8MP Autofocus camera with LED light to capture photos and videos.
21	Fingerprint Scanner (Optional)	Serves as the fingerprint verification, preventing unauthorized access.
22	HF RFID Reader (Optional)	Reads data from HF RFID tags.
23	Physical Buttons	2x Programmable function keys Fn1 and Fn2, volume buttons, and power button.
24	13.3” / 14” P-Cap Touch Screen	Displays the output of the computer with touchscreen feature.

LED Indicators

Icon	Indicator	Description
	Power Indicator	**Blue**– Laptop is ON **No light**– Laptop is OFF
	Battery Status	**Orange**–AC adapter is plugged in and charging **Green**–AC adapter is plugged in and the battery is fully charged **Solid Red** - Low battery (<10%) **Blinking Red** – Battery is hot-swapped. **No light** – Battery is in use, and more than 10%
	Drive Indicator	**Green** - Disk is active **No light** - Disk is idling
	RF Communication	**Green** - One of Wi-Fi/BT/WWAN/GPS is ON **No light** - Wi-Fi/BT/WWAN/GPS are all OFF

Bottom Components

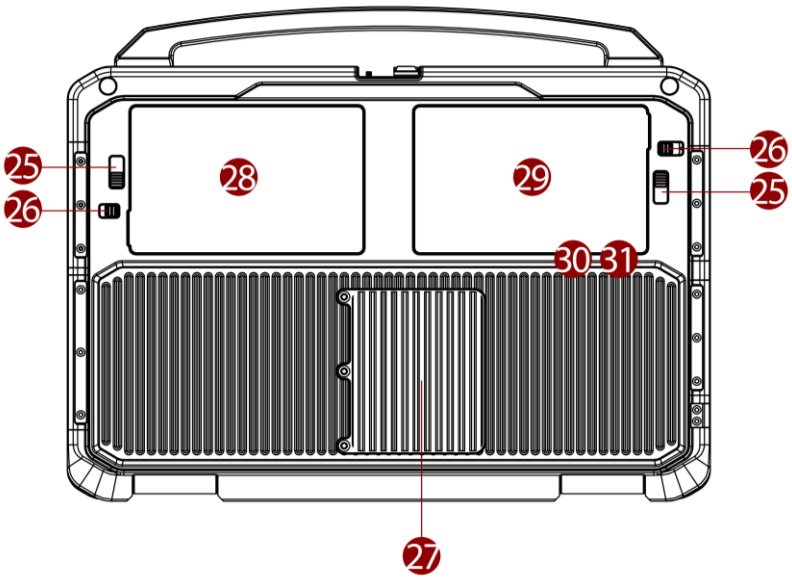

No	Item	Description
25	Battery Latch	To eject the battery, for replacing battery.
26	Battery Lock	To securely enable the battery.
27	Service Window	To allow user to swap the module easily. Choices are: 4G LTE/ Wi-Fi/ RAM.
28	Battery 1	Supplies power to computer when external power is not connected
29	Battery 2	Supplies power to computer when external power is not connected
30	Micro SD Card Slot	Service window to insert Micro SD card.
31	Nano SIM Card Slot	Service window to insert Nano SIM card.

1.4 Mechanical Dimension

Unit: mm

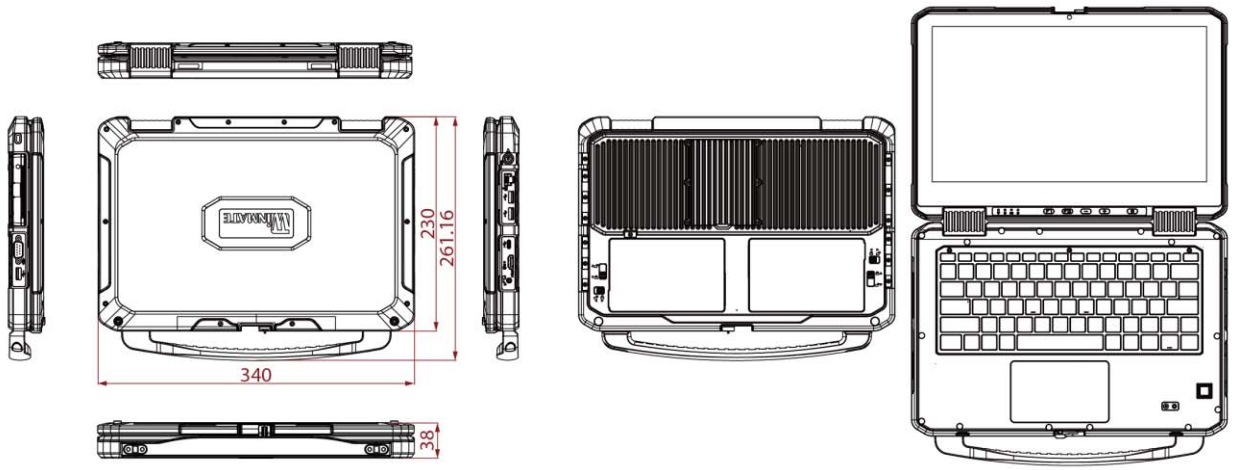

1.5 Hardware Installation

1.5.1 Side Expansion Area

You can add the following option:

Product No. SC-L140
Smart Card Reader + Removable 2nd SSD

Inserting an option to the expansion area:

Important:
We recommend user to turn off the computer completely by following:

1. Click **Start → Settings → Update & Security → Recovery.**
2. Click **Restart now.**
3. Click **Turn off your PC.**

1. Turn off the computer and disconnect the AC adaptor. Make sure no foreign objects are under the computer.
2. Locate the Expansion slot lock latch and push it to the “Unlock” position. Pull open the expansion door.

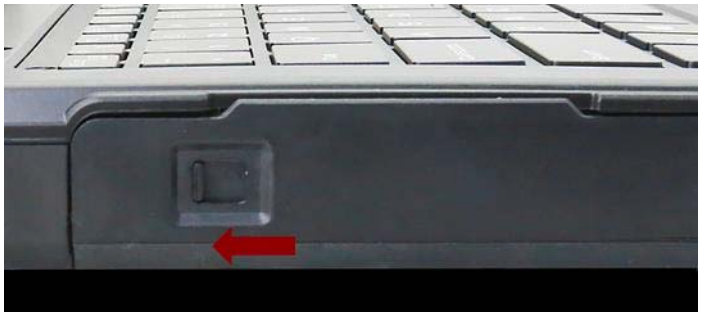

3. Insert an option to the expansion area. Close the expansion slot door and lock the latch.

Removing an option from the expansion area:

1. Turn off the computer and disconnect the AC adaptor. Make sure no foreign objects are under the computer.

2. Locate the Expansion slot lock latch and push it to the “Unlock” position. Pull open the expansion door.

3. Pull out the option from the expansion area.

4. Close the expansion slot door and lock the latch.

1.5.2 Installing a Micro SD Card

Your laptop supports up to 2TB additional storage with an optional microSD card slot.

Important:

- Do not remove or insert the microSD card until Windows has completed loading.
- Do not remove the card or turn off the computer in the following cases, otherwise the data may be corrupted.
  - While the computer is in sleep.
  - While data is being read from or written to the card.
  - Immediately after the writing operation, this computer may still continue to access to the card. If you remove the card before the operation is completed, the data may be damaged or the card access may no longer be performed normally.
- Note that Winmate assumes absolutely no liability for any loss of data recorded by the user, or any other damages, direct or indirect.
- Keep microSD cards away from infants and small children.

To insert the Micro SD Card:

1. Remove the right battery, as described in section *1.6.1 Installing and Removing the Battery*.
2. Insert microSD card into slot with contacts facing down.
3. Press the card in to ensure that it is seated properly.
4. Put the battery back.

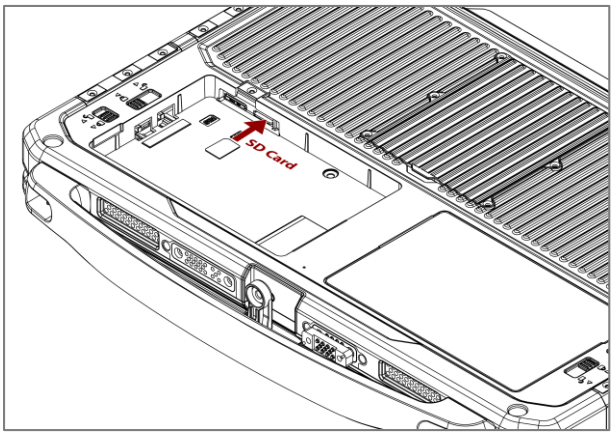

To remove Micro SD Card:

1. Save the data and close all applications.
2. Disable the card: click on the task tray, then click . Select the card.

Note:

This step is unnecessary when the computer is off, or, is not displayed, or the card does not appear in the list.

3. Remove the right battery, as described in section *1.6.1 Installing and Removing the Battery*.
4. Push and release the microSD card to unlock it.
5. Pull out the microSD card.
6. Put the battery back.

1.6 Battery

1.6.1 Installing and Removing the Batteries

Important:

- The battery pack is not charged when you first purchase it. Be sure to charge it before using for the first time. Charging starts automatically when the AC adaptor is connected to the computer.
- Use only the specified battery pack with your computer.
- If the computer is wet, wipe them off and open the cover. Make sure to dry off the computer, replace/remove the battery pack.

To install the standard battery pack:

1. Disconnect any cords connected to the computer.
2. Turn the laptop over, bottom part is facing up. Make sure no foreign objects are under the computer.
3. Locate the Battery Lock Latch and push it to the “Unlock” position.
4. Insert the battery with the connector-pins side first, and then lower the battery into the battery compartment.
5. Push completely until the battery locks into place.
6. Slide the battery latch to the lock position to secure the battery.
7. Repeat step 3 to 6 to insert the second battery.

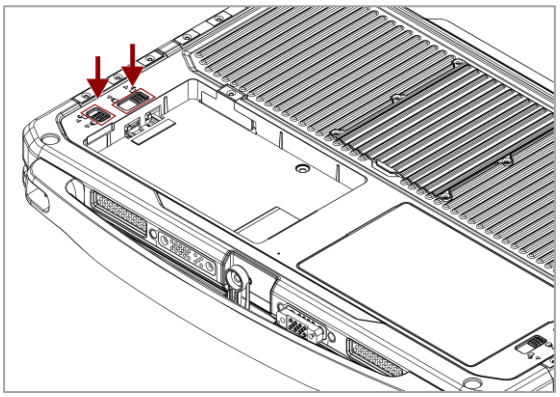

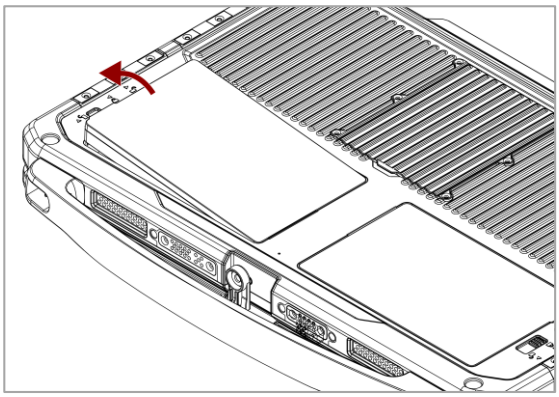

To remove the battery pack:

1. Shut down the laptop (or put into sleep mode). Disconnect any cords connected to the computer.
2. Turn the laptop over, bottom part is facing up. Make sure no foreign objects are under the computer.
3. Locate the Battery Lock Latch and push it to the “Unlock” position.
4. Locate the Battery Release Slider that is spring-loaded. Pull back and hold.
5. Lift the battery out using the opening on the side of the battery compartment.
6. Repeat step 3 to 5 to insert the second battery.

Important:

- When hot-swapping the battery, replace it quickly according to the level of batteries in use.
- Make sure the latches are securely locked, otherwise the battery pack may fall when you carry the computer.
- Do not remove the battery pack forcibly when the latches are locked. Doing so may damage the battery pack.

1.6.2 Important Battery Tips

1.6.2.1 How to Use Battery with Minimal Deterioration

The battery performance is normally deteriorated over time. But the deterioration can be accelerated due to the battery is used, charged, or stored in a place with high temperature or repeatedly charged.

To reduce the deterioration and ensure longer battery life, you must reduce the number of charges and ensure that the temperature inside the battery does not become too high. If battery deteriorates, be sure to replace with a new and specified battery pack.

- Do not charge the battery inside a vehicle with all its windows closed and exposed to the hot sun or in other high temperature places. Charge the battery in a temperature range of 10 °C to 30 °C (50 °F to 86 °F).
- Recharge the battery no more than once a day or when the remaining charge drops to <10%.
- Charge the battery when the computer is powered off to keep the temperature inside the battery.

1.6.2.2 Operating the Computer to Maximize the Battery Operation Time

- Leave computer off when it is not in use
- Decrease the internal LCD brightness by pressing **Fn** + ↓.
- Before stepping away from your computer, enter the sleep or hibernation mode to reduce power consumption.
- Avoid the use of screen saver or applications that will drain the CPU.
- Remove peripheral devices (USB devices, external mouse, etc.) when not in use.
- When the network communication is not working, turn off the wireless LAN.

1.6.2.3 When the Computer Is Inactive for a Long Period of Time

To maintain the battery performance, when not used for a long period (several months or more), remove the battery with a remaining charge of 30% to 40% from the computer and store in a cool and dark place, within the range of 10 °C to 30 °C (50 °F to 86 °F).

1.6.2.4 Notices While Using the Battery Pack

- Do not touch the terminals on the battery pack. If the terminals are dirty or damaged, it will hinder the computer operation and battery performance.
- To charge the battery quicker, power the computer off or put it in sleep or hibernation mode.
- The battery discharges faster and charge longer in low temperature environments.

1.7 Turning On/Off

1.7.1 Turning On the Computer

Note:

- Do not press the power switch repeatedly.
- The computer will forcibly be turned off if you press and hold the power switch for ten seconds or longer.
- Once you turn off the computer, wait for ten seconds or more before you turn on the computer again.
- Do not perform the following operation until the drive indicator turns off.
  - Connecting or disconnecting the AC adaptor
  - Pressing the power switch
  - Touching the keyboard, touchpad, touchscreen or external mouse.
  - Closing the display.

1. Open the top cover by pushing the cover latch and lifting up the cover.

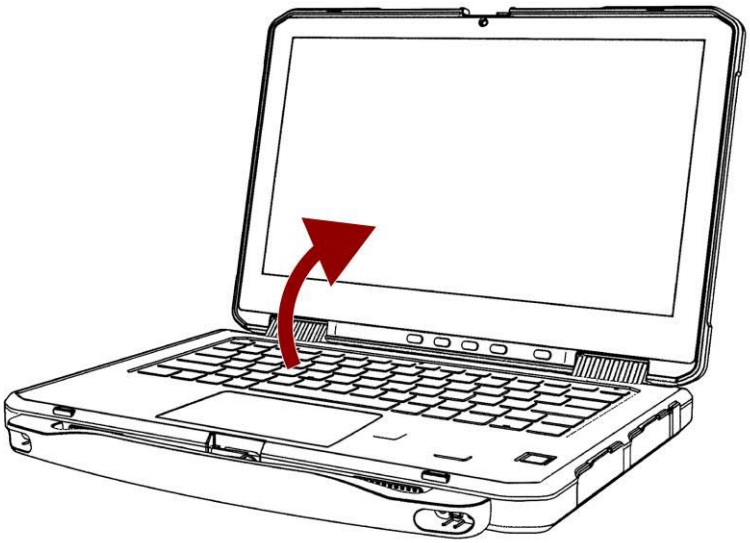

2. Press the power button in the keyboard or physical buttons. The Windows operating system should start.

1.7.2 Turning Off the Rugged Laptop

Important:

- Do not perform the following operations
  - Touch the keyboard, touchpad, touchscreen, or external mouse.
  - Pressing power switch.
  - Connect or disconnect the AC adaptor.
  - Close the display

You can shut down your laptop by Click **Start** → **Power** → **Shut down**.

To turn off the laptop completely, follows:

1. Click **Start** → **Setting** → **Update & Security** → **Recovery**.
2. Click **Restart Now**.
3. Click **Turn off your PC**.

Note:

- Save your files before performing this option to prevent loss of important data.
- To conserve power, the following power saving methods are set at the time of purchase.
  - The screen automatically turns off after:
    10 minutes (when AC adaptor is connected) of inactivity
    4 minutes (when on battery power) of inactivity
  - The computer automatically enters sleep after:
    10 minutes (when AC adaptor is connected) of inactivity
    4 minutes (when on battery power) of inactivity

Appendix

Appendix A: Declaration of Conformity (DoC)

FCC-B Radio Frequency Interference Statement

This equipment has been tested and found to comply with the limits for a Class B digital device, pursuant to part 15 of the FCC rules.
These limits are designed to provide reasonable protection against harmful interference in a residential installation.

This equipment generates, uses and radiates radio frequency energy, and, if not installed and used in accordance with the instructions, may cause harmful interference to radio communications. However, there is no guarantee that interference will not occur in a particular installation. If this equipment does cause harmful interference to radio or television reception, which can be determined by turning the equipment off and on, the user is encouraged to try to correct the interference by one or more of the following measures:

- Reorient or relocate the receiving antenna.
- Increase the separation between the equipment and receiver.
- Connect the equipment into an outlet on a circuit different from that to which the receiver is connected.

NOTE

- The changes or modifications not expressly approved by the party responsible for compliance could void the user's authority to operate the equipment.
- Shield interface cables and AC power cord, if any, must be used in order to comply with the emission limits.

FCC Conditions

This device complies with part 15 of the FCC Rules. Operation is subject to the following two conditions:

- This device may not cause harmful interference.
- This device must accept any interference received, including interference that may cause undesired operation.

CE Notice (European Union)

This equipment is in conformity with the requirement of the following EU legislations and harmonized standards. Product also complies with the Council directions.

Electromagnetic Compatibility Directive (2014/30/EU)

- EN55024: 2010/ A1: 2015
  - IEC61000-4-2: 2009
  - IEC61000-4-3: 2006+A1: 2007+A2: 2010
  - IEC61000-4-4: 2012
  - IEC61000-4-5: 2014
  - IEC61000-4-6: 2014
  - IEC61000-4-8: 2010
  - IEC61000-4-11: 2004
- EN55032: 2015/AC:2016
- EN61000-3-2:2014
- EN61000-3-3:2013

Low Voltage Directive (2014/35/EU)

- EN 62368-1:2014

Battery Regulations

European Union: Batteries, battery packs, and accumulators should not be disposed of as unsorted household waste. Please use the public collection system to return, recycle, or treat them in compliance with the local regulations.

Taiwan: For better environmental protection, waste batteries should be collected separately for recycling or special disposal.

California, USA: The button cell battery may contain perchlorate material and requires special handling when recycled or disposed of in California.

For further information please visit: http://www.dtsc.ca.gov/hazardouswaste/perchlorate/

Safety Guideline for Using Lithium Battery

Danger of explosion if battery is incorrectly replaced. Replace only with the same or equivalent type recommended by the equipment manufacturer. Discard used batteries according to manufacturer's instructions.

WEEE Statement

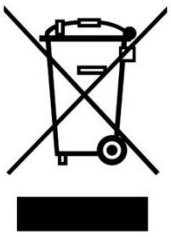

European Union: Under the European Union ("EU") Directive on Waste Electrical and Electronic Equipment, Directive 2002/96/EC, which takes effect on August 13, 2005, products of "electrical and electronic equipment" cannot be discarded as municipal waste anymore and manufacturers of covered electronic equipment will be obligated to take back such products at the end of their useful life.

Chemical Substances Information

In compliance with chemical substances regulations, such as the EU REACH Regulation (Regulation EC No. 1907/2006 of the European Parliament and the Council),

Notes

Notes

Winmate Inc.
9F, No.111-6, Shing-De Rd., San-Chung District,
New Taipei City 24158, Taiwan, R.O.C
www.winmate.com

Copyright © 2021 Winmate Inc. All rights reserved.

SAR Warning

RF Exposure Information and Statement

The SAR limit of FCC/IC is 1.6 W/kg averaged over one gram of tissue. Device types: L140TG (FCC ID: PX9L140TG, IC:9911A-L140TG) has also been tested against this SAR limit. The highest SAR value reported under this standard during product certification for use at the properly worn on the body is 0.094W/kg. This device was tested for typical body-worn operations with the back of the handset kept 0mm from the body. To maintain compliance with FCC RF exposure requirements, use accessories that maintain a 10mm separation distance between the user's body and the back of the handset. The use of belt clips, holsters and similar accessories should not contain metallic components in its assembly. The use of accessories that do not satisfy these requirements may not comply with FCC RF exposure requirements, and should be avoided.

Body-worn Operation

This device was tested for typical body-worn operations. To comply with RF exposure requirements, a minimum separation distance of 10mm must be maintained between the user’s body and the handset, including the antenna. Third-party belt-clips, holsters, and similar accessories used by this device should not contain any metallic components. Body-worn accessories that do not meet these requirements may not comply with RF exposure requirements and should be avoided. Use only the supplied or an approved antenna.

IC Warning

This device complies with Industry Canada’s licence-exempt RSSs. Operation is subject to the following two conditions:
(1) This device may not cause interference; and
(2) This device must accept any interference, including interference that may cause undesired operation of the device.

Cet appareil est conforme aux CNR exemptes de licence d'Industrie Canada . Son fonctionnement est soumis aux deux conditions suivantes :
(1) Ce dispositif ne peut causer d'interférences ; et
(2) Ce dispositif doit accepter toute interférence , y compris les interférences qui peuvent causer un mauvais fonctionnement de l'appareil.