# RF Test Report

| | | |
|---|---|---|
| Applicant | : | Mobilehelp, LLC |
| Product Name | : | Cellular Base Station 5.0 PLUS |
| Trade Name | : | MobileHelp |
| Model Number | : | DC-CBS5-03, DC-CBS5-13 |
| Applicable Standard | : | FCC 47 CFR PART 15 SUBPART C<br>ANSI C63.10:2013 |
| Received Date | : | Oct. 05, 2023 |
| Test Period | : | Oct. 18 ~ Oct. 26, 2023 |
| Issued Date | : | Nov. 09, 2023 |

**Issued by**

Eurofins E&E Wireless Taiwan Co., Ltd.
No. 140-1, Changan Street, Bade District,
Taoyuan City 334025, Taiwan (R.O.C.)
Tel：+886-3-2710188 / Fax：+886-3-2710190

Taiwan Accreditation Foundation accreditation number: 1330
Frequency Range: 9 kHz to 325 GHz
Test Firm Registration Number: 226252 (Bade test site)
Test Firm Registration Number: 191812 (Wugu test site)

***Note:***

1.The test results are valid only for samples provided by customers and under the test conditions described in this report.
2.This report shall not be reproduced except in full, without the written approval of Eurofins E&E Wireless Taiwan Co., Ltd.
3.The relevant information is provided by customers in this test report. According to the correctness, appropriateness or completeness of the information provided by the customer, if there is any doubt or error in the information which affects the validity of the test results, the laboratory does not take the responsibility.

# Revision History

| Rev. | Issued Date | Description | Revised by |
|---|---|---|---|
| 00 | Nov. 09, 2023 | Initial Issue | Emma Chao |
| | | | |
| | | | |
| | | | |

# Verification of Compliance

| | | |
|---|---|---|
| Applicant | : | Mobilehelp, LLC |
| Product Name | : | Cellular Base Station 5.0 PLUS |
| Trade Name | : | MobileHelp |
| Model Number | : | DC-CBS5-03, DC-CBS5-13 |
| FCC ID | : | PXTCBS5-13 |
| Applicable Standard | : | FCC 47 CFR PART 15 SUBPART C<br>ANSI C63.10:2013 |
| Test Result | : | Complied |
| Performing Lab. | : | Eurofins E&E Wireless Taiwan Co., Ltd.<br>No. 140-1, Changan Street, Bade District,<br>Taoyuan City 334025, Taiwan (R.O.C.)<br>Tel：+886-3-2710188 / Fax：+886-3-2710190<br>Taiwan Accreditation Foundation accreditation number: 1330 |

Testing Laboratory 1330

Eurofins E&E Wireless Taiwan Co., Ltd. tested the above equipment in accordance with the requirements set forth in the above standards. All indications of Pass/Fail in this report are opinions expressed by Eurofins E&E Wireless Taiwan Co., Ltd. based on interpretations and/or observations of test results. The test results show that the equipment tested is capable of demonstrating compliance with the requirements as documented in this report.

Approved By : Kai Yu Yang

# TABLE OF CONTENTS

**1 General Information ..... 5**
1.1. Summary of Test Result ..... 5
1.2. Testing Location ..... 5
1.3. Measurement Uncertainty ..... 6
1.4. Test Site Environment ..... 6
**2 EUT Description ..... 7**
**3 Test Methodology ..... 8**
3.1. Mode of Operation ..... 8
3.2. EUT Test Step ..... 8
3.3. Configuration of Test System Details ..... 9
3.4. Test Instruments ..... 10
**4 Measurement Procedure ..... 12**
4.1. AC Power Line Conducted Emission Measurement ..... 12
4.2. Radiated Emission Measurement ..... 14
4.3. Duration of transmission ..... 18
4.4. Bandwidth measurement ..... 19
4.5. Antenna Requirement ..... 20
**5 Test Results ..... 21**
5.1. Conducted Emission ..... 21
5.2. Radiated Emission Measurement ..... 23
5.3. Conducted Test Results ..... 31

**Appendix A. Test Setup Photographs**

# 1 General Information

## 1.1. Summary of Test Result

| Standard | Item | Results | Remark |
|---|---|---|---|
| 15.207(a) | Conducted Emissions Voltage | PASS | --- |
| 15.231(e) | Radiated Emission Limits | PASS | --- |
| 15.231 | Duration of transmission | PASS | --- |
| 15.231(c) | Bandwidth measurement | PASS | --- |
| 15.203 | Antenna Requirement | PASS | ---- |

| Standard | Description |
|---|---|
| CFR47, Part 15, Subpart C | Intentional Radiators |
| ANSI C63. 10: 2013 | American National Standard of Procedures for Compliance Testing of Unlicensed Wireless Devices |

Decision Rule

■ Uncertainty is not included.

□ Uncertainty is included.

## 1.2. Testing Location

Lab Name: Eurofins E&E Wireless Taiwan Co., Ltd.

Site Address: ■ No. 140-1, Changan Street, Bade District, Taoyuan City 334025, Taiwan (R.O.C.)

Site Address: □ No. 2, Wuquan 5th Rd. Wugu Dist., New Taipei City, Taiwan (R.O.C.)

## 1.3. Measurement Uncertainty

| Test Item | Frequency | Uncertainty | |
|---|---|---|---|
| | | BD | WG |
| Conducted Emission | 150 kHz ~ 30 MHz | 2.7 dB | 2.6 dB |
| RF Bandwidth | | 4.5 % | 4.5 % |
| Frequency Stability | | $1.3 \times 10^{-7}$ | $1.3 \times 10^{-7}$ |

| Test Item | Frequency | Uncertainty | | | |
|---|---|---|---|---|---|
| | | 96601-BD | 96603-BD | 96602-WG | 96603-WG |
| Radiated Emission | 9 kHz ~ 30 MHz | 1.9 dB | 1.9 dB | 1.6 dB | 1.6 dB |
| | 30 MHz ~ 1000 MHz | 4.9 dB | 4.9 dB | 4.8 dB | 4.8 dB |
| | 1000 MHz ~ 18000 MHz | 4.9 dB | 5.0 dB | 5.0 dB | 5.2 dB |
| | 18000 MHz ~ 26500 MHz | 4.3 dB | 4.4 dB | 4.4 dB | 4.5 dB |
| | 26500 MHz ~ 40000 MHz | 4.5 dB | 4.5 dB | 4.6 dB | 4.5 dB |

## 1.4. Test Site Environment

| Items | Required (IEC 60068-1) | Interval(*) |
|---|---|---|
| Temperature (°C) | 15-35 | 20-30 |
| Humidity (%RH) | 25-75 | 45-75 |

(*)The measurement ambient temperature is within this range.

# 2 EUT Description

The product specifications of the EUT presented in the report are declared by the manufacturer who shall take full responsibility for the authenticity

| | |
|---|---|
| Applicant | Mobilehelp, LLC<br>5050 Conference Way North, Suite 125, Boca Raton, FL 33431 |
| Product Name | Cellular Base Station 5.0 PLUS |
| Trade Name | MobileHelp |
| Model Number | DC-CBS5-03, DC-CBS5-13 |
| Models different description | DC-CBS5-03 is for AT&T and DC-CBS5-13 is for Verizon |
| FCC ID | PXTCBS5-13 |
| Frequency Range | 433.92 MHz |
| Modulation Type | ASK |
| Number of Channels | 1 Channel |
| Antenna Type | PCB Antenna |
| Antenna Max. Gain | -1.94 dBi |
| Operate Temp. Range | -10 ~ +50 ℃ |
| EUT Power Rating | 5 Vdc, 2 A |

# 3 Test Methodology

## 3.1. Mode of Operation

In the test report use EUT model: DC-CBS5-03 to operate testing.

The following test mode(s) were scanned during the preliminary test：

| Pre-Test Mode | Final-Test Mode |
|---|---|
| Transmit Mode | V |
| RFID | V |

Eurofins has verified the construction and function in typical operation.

All the test modes were carried out with the EUT in normal operation.

## 3.2. EUT Test Step

| | |
|---|---|
| 1. | Setup the EUT shown on “Configuration of Test System Details”. |
| 2. | Turn on the power of all equipment. |
| 3. | The EUT will start to operate function. |

## 3.3. Configuration of Test System Details

Conducted Emission & Radiated Emission

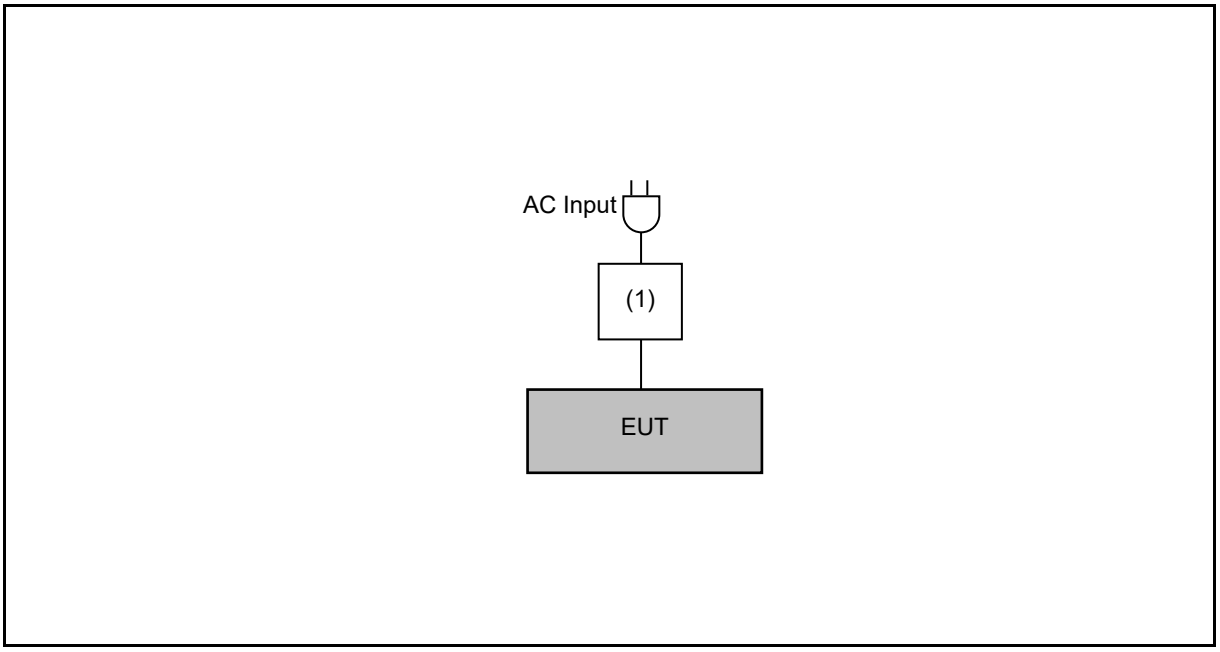


| Devices Description | | | | | |
|---|---|---|---|---|---|
| Product | | Manufacturer | Model Number | Serial Number | Power Cord |
| (1) | AC Adapter | Keen Ocean | S09-012-0050-02000 | --- | --- |

## 3.4. Test Instruments

For Conducted Emission
Test Period: Oct. 20, 2023
Testing Engineer: Jayson Hsieh

| Test Site | | Conduction01-BD | | | | |
|---|---|---|---|---|---|---|
| Use | Equipment | Manufacturer | Model Number | Serial Number | Cal. Date | Cal. Period |
| ☒ | Test Receiver | R&S | ESCI | 100367 | May 22, 2023 | 1 year |
| ☒ | LISN | R&S | ENV216 | 101040 | Mar. 21, 2023 | 1 year |
| ☒ | LISN | R&S | ENV216 | 101140 | Jan. 12, 2023 | 1 year |
| ☒ | RF Cable | Woken | 00100D1380194M | TE-02-03 | Jun. 01, 2023 | 1 year |
| ☒ | Software | EZ EMC | 1.1.4.3 | N/A | N.C.R. | --- |

For Conducted
Test Period: Oct. 18 ~ Oct. 25, 2023
Testing Engineer: Brian Lin

| Test Site | | RF01-BD | | | | |
|---|---|---|---|---|---|---|
| Use | Equipment | Manufacturer | Model Number | Serial Number | Cal. Date | Cal. Period |
| ☒ | Spectrum Analyzer (10 Hz~26.5 GHz) | Keysight | N9010B | MY59071418 | Mar. 20, 2023 | 1 year |

Note: N.C.R. = No Calibration Request.

For Radiated Emissions
Test Period: Oct. 26, 2023
Testing Engineer: Hung Chou

| Test Site | | 96603-BD | | | | |
|---|---|---|---|---|---|---|
| Radiation test sites | | Semi Anechoic Room | | | | |
| Use | Equipment | Manufacturer | Model Number | Serial Number | Cal. Date | Cal. Period |
| ☒ | Spectrum Analyzer (10 Hz~44 GHz) | Keysight | N9020B | MY60112363 | Jan. 13, 2023 | 1 year |
| ☒ | Amplifier (100 kHz~1.3 GHz) | Agilent | 8447D | 2944A11119 | Jan. 07, 2023 | 1 year |
| ☒ | Broadband Amplifier (1 GHz~26.5 GHz) | Titan | T0912E01263025 A1F | 002 | Jul. 24, 2023 | 1 year |
| ☒ | Trilog Broadband Antenna (30 kHz~1 GHz) | Schwarzbeck Mess-Elektronik | VULB9168 | 01146 | Jun. 26, 2023 | 1 year |
| ☒ | Broadband Horn Antenna (1 GHz~18 GHz) | Schwarzbeck Mess-Elektronik | 9120D | 02207 | Jul. 07, 2023 | 1 year |
| ☒ | Coaxial Cable | Titan | T0710AT327A10A 100 | J11005 | Aug. 10, 2023 | 1 year |
| ☒ | Coaxial Cable | Titan | T0710AT327A10A 900 | J11004 | Aug. 10, 2023 | 1 year |
| ☒ | Coaxial Cable | Titan | CFD400NL-LW | 001 | Aug. 10, 2023 | 1 year |
| ☒ | Software | EZ EMC | 1.1.4.4 | N/A | N.C.R. | --- |

Note: N.C.R. = No Calibration Request.

# 4 Measurement Procedure

## 4.1. AC Power Line Conducted Emission Measurement

■ **Limit**

| Frequency (MHz) | Quasi-peak | Average |
|---|---|---|
| 0.15 - 0.5 | 66 to 56 | 56 to 46 |
| 0.50 - 5.0 | 56 | 46 |
| 5.0 - 30.0 | 60 | 50 |

■ **Test Setup**

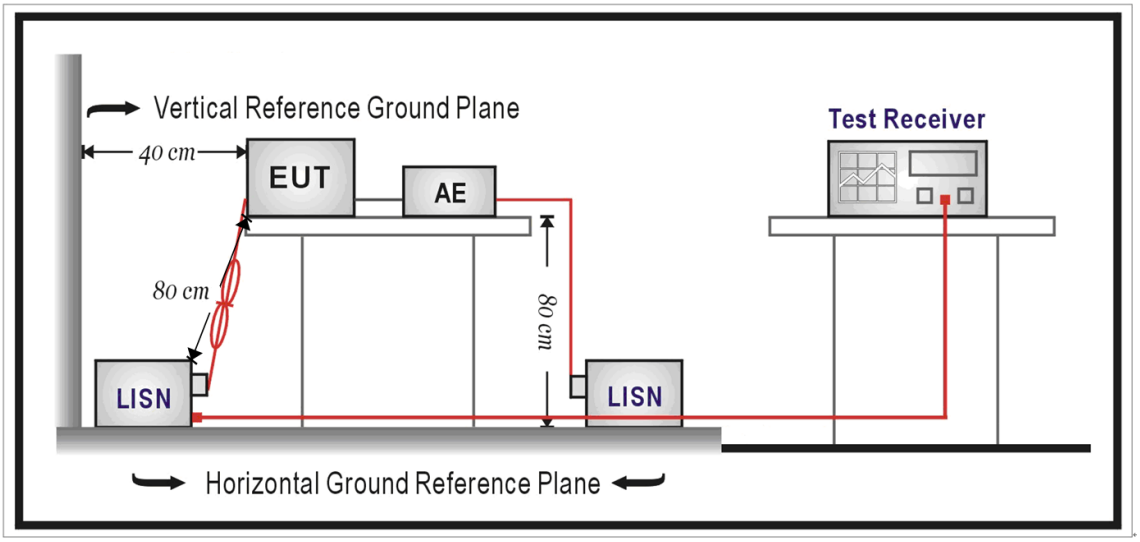

■ **Test Procedure**

The EUT and simulators are connected to the main power through a line impedance stabilization network (L.I.S.N.). This provides a 50 Ω// 50 uH coupling impedance for the measuring equipment. The peripheral devices are also connected to the main power through a LISN that provides a 50 Ω// 50 uH coupling impedance with 50 Ω termination.

Tabletop device shall be placed on a non-conducting platform, of nominal size 1 m by 1.5 m, raised 80 cm above the reference ground plane. The wall of screened room shall be located 40 cm to the rear of the EUT. Other surfaces of tabletop or floor standing EUT shall be at least 80 cm from any other ground conducting surface including one or more LISNs. For floor-standing device shall be placed under the EUT with a 12 mm insulating material.

Conducted emissions were investigated over the frequency range from 0.15 MHz to 30 MHz using a resolution bandwidth of 9 kHz. The equipment under test (EUT) shall be meet the limits in section 4.1, as applicable, including the average limit and the quasi-peak limit when using respectively, an average detector and quasi-peak detector measured in accordance with the methods described of related standard. When all of peak value were complied with quasi-peak and average limit from 150 kHz to 30 MHz then quasi-peak and average measurement was unnecessary.

The AMN shall be placed 0.8 m from the boundary of the unit under test and bonded to a ground reference plane for AMNs mounted on top of the ground reference plane. This distance is between the closest points of the AMN and the EUT. All other units of the EUT and associated equipment shall be at least 0.8 m from the AMN. If the mains power cable is longer than 1 m then the cable shall be folded back and forth at the centre of the lead to form a bundle no longer than 0.4 m. All of interconnecting cables that hang closer than 40 cm to the ground plane shall be folded back and forth in the center forming a bundle 30 cm to 40 cm long. All of EUT and AE shall be separate place more than 0.1 m. All 50 Ω ports of the LISN shall be resistively terminated into 50 Ω loads when not connected to the measuring instrument.

If the reading of the measuring receiver shows fluctuations close to the limit, the reading shall be observed for at least 15 s at each measurement frequency; the higher reading shall be recorded with the exception of any brief isolated high reading which shall be ignored..

## 4.2. Radiated Emission Measurement

■ **Limit**

According to §15.231 (e) Intentional radiators may operate at a periodic rate exceeding that specified in paragraph (a) of this section and may be employed for any type of operation, including operation prohibited in paragraph (a) of this section, provided the intentional radiator complies with the provisions of paragraphs (b) through (d) of this section, except the field strength table in paragraph (b) of this section is replaced by the following: Linear interpolations.

| Fundamental frequency (MHz) | Field strength of fundamental (microvolts/meter) | Field strength of spurious emission (microvolts/meter) |
|---|---|---|
| 40.66-40.70 | 1,000 | 100 |
| 70-130 | 500 | 50 |
| 130-174 | 500 to 1,500[1] | 50 to 150[1] |
| 174-260 | 1,500 | 150 |
| 260-470 | 1,500 to 5,000[1] | 150 to 500[1] |
| Above 470 | 5,000 | 500 |

■ **Setup**

9 kHz ~ 30 MHz

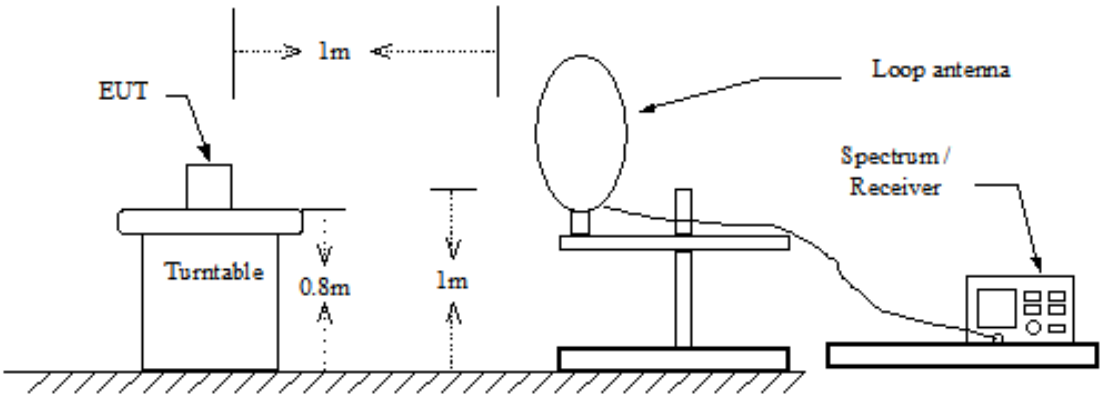

Below 1 GHz

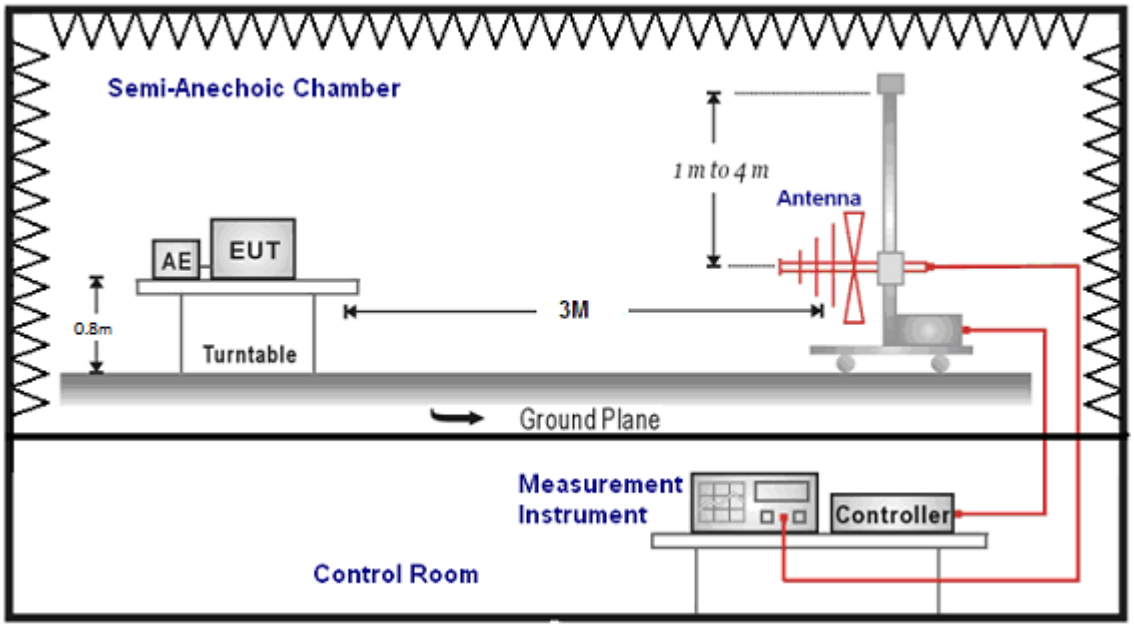


Above 1 GHz

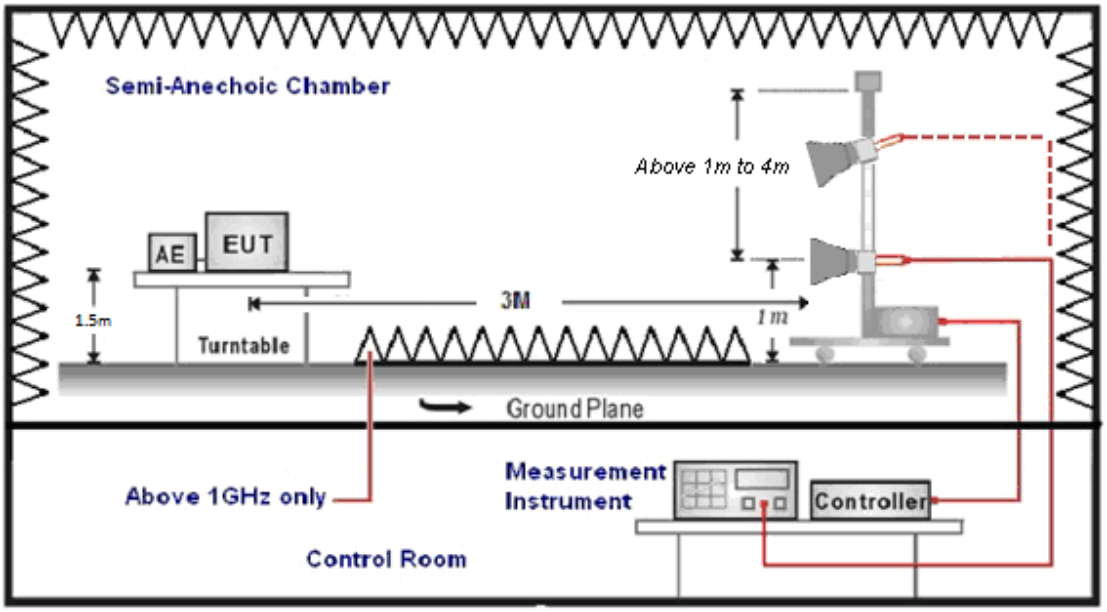

■ **Test Procedure**

Final radiation measurements were made on a three-meter, Semi Anechoic Chamber. The EUT system was placed on a nonconductive turntable which is 0.8 or 1.5 meters height, top surface 1.0 x 1.5 meter. The spectrum was examined from 250 MHz to 2.5 GHz in order to cover the whole spectrum below 10th harmonic which could generate from the EUT. During the test, EUT was set to transmit continuously & Measurements spectrum range from 9 kHz to 26.5 GHz is investigated.

For measurements below 30 MHz the resolution bandwidth is set to 10 kHz for peak detection measurements or 9 kHz for quasi-peak detection measurements. The video bandwidth is 3 times of the resolution bandwidth.

For measurements below 1 GHz the resolution bandwidth is set to 100 kHz for peak detection measurements or 120 kHz for quasi-peak detection measurements. Peak detection is used unless otherwise noted as quasi-peak.

For measurements above 1 GHz the resolution bandwidth is set to 1 MHz, and then the video bandwidth is set to 3 MHz for peak measurements and 10 Hz for average measurements when Duty cycle >98 % / 1/T for average measurements when Duty cycle <98 %. A nonconductive material surrounded the EUT to supporting the EUT for standing on tree orthogonal planes. At each condition, the EUT was rotated 360 degrees, and the antenna was raised and lowered from one to four meters to find the maximum emission levels. Measurements were taken using both horizontal and vertical antenna polarization.

SCHWARZBECK MESS-ELEKTRONIK Biconilog Antenna at 3 Meter and the SCHWARZBECK Double Ridged Guide Antenna was used in frequencies 1 – 26.5 GHz at a distance of 1 meter. All test results were extrapolated to equivalent signal at 3 meters utilizing an inverse linear distance extrapolation Factor (20 dB/decade).

For testing above 1 GHz, the emission level of the EUT in peak mode was 20 dB lower than average limit (that means the emission level in peak mode also complies with the limit in average mode), then testing will be stopped and peak values of EUT will be reported, otherwise, the emissions will be measured in average mode again and reported.
Appropriate preamplifiers were used for improving sensitivity and precautions were taken to avoid overloading or desensitizing the spectrum analyzer. No post – detector video filters were used in the test.

The spectrum analyzer's 6 dB bandwidth was set to 1 MHz, and the analyzer was operated in the peak detection mode, for frequencies both below and up 1 GHz. The average levels were obtained by subtracting the duty cycle correction factor from the peak readings.

The following procedures were used to convert the emission levels measured in decibels referenced to 1 microvolt (dBuV) into field intensity in micro volts pre meter (uV/m).

The actual field intensity in decibels referenced to 1 microvolt in to field intensity in micro colts per meter (dBuV/m).

The actual field is intensity in referenced to 1 microvolt per meter (dBuV/m) is determined by algebraically adding the measured reading in dBuV, the antenna factor (dB), and cable loss (dB) and Subtracting the gain of preamplifier (dB) is auto calculate in spectrum analyzer.

(1) Correction factor (dBuV/m) = FI (dBuV) +AF (dBuV) +CL (dBuV)-Gain (dB)
FI= Reading of the field intensity.
AF= Antenna factor.
CL= Cable loss.
P.S Amplitude is auto calculate in spectrum analyzer.

(2) Result (dBuV/m) = Correction factor (dB/m) + Reading(dBuV).

(3) Actual Amplitude (dBuV/m) = Amplitude (dBuV)-Dis(dB)
The FCC specified emission limits were calculated according the EUT operating frequency and by following linear interpolation equations:
(a) For fundamental frequency : Transmitter Output < +30 dBm
(b) For spurious frequency : Spurious emission limits = fundamental emission limit /10

Data of measurement within this frequency range without mark in the table above means the reading of emissions are attenuated more than 20 dB below the permissible limits or the field strength is too small to be measured.

When peak results are less than average limit, so not need to evaluate the average.

## 4.3. Duration of transmission

■ **Limit**

In addition, devices operated under the provisions of this paragraph shall be provided with a means for automatically limiting operation so that the duration of each transmission shall not be greater than one second and the silent period between transmissions shall be at least 30 times the duration of the transmission but in no case less than 10 seconds.

■ **Test Setup**

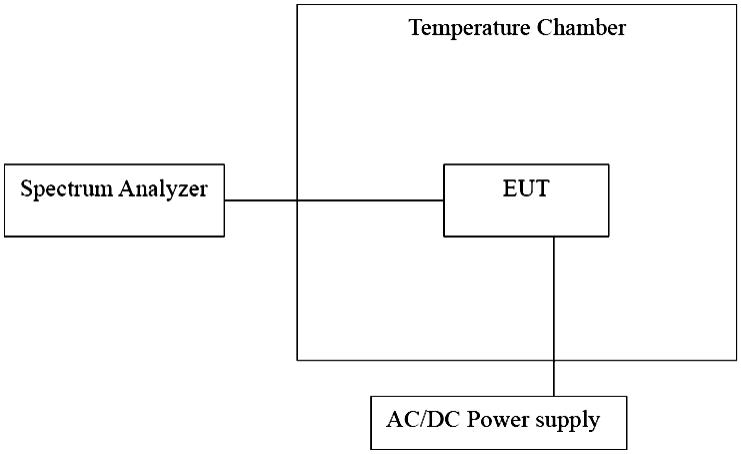


■ **Test Procedure**

1. Place the EUT on the table and set it in the transmitting mode.
2. Remove the antenna from the EUT and then connect a low loss RF cable from the antenna port to the spectrum analyzer.
3. Set the environment into appropriate environment.
4. Set the spectrum analyzer as RBW=100 kHz, VBW = RBW, Span = 0 Hz, Sweep = 12 S.
5. Mark the peak frequency and measure the frequency tolerance using frequency counter function.
6. Repeat until all the results are investigated.

## 4.4. Bandwidth measurement

■ **Limit**

According to §15.231 (c) The bandwidth of the emission shall be no wider than 0.25 % of the center frequency for devices operating above 70 MHz and below 900 MHz. For devices operating above 900 MHz, the emission shall be no wider than 0.5 % of the center frequency. Bandwidth is determined at the points 20 dB down from the modulated carrier.

■ **Test Setup**

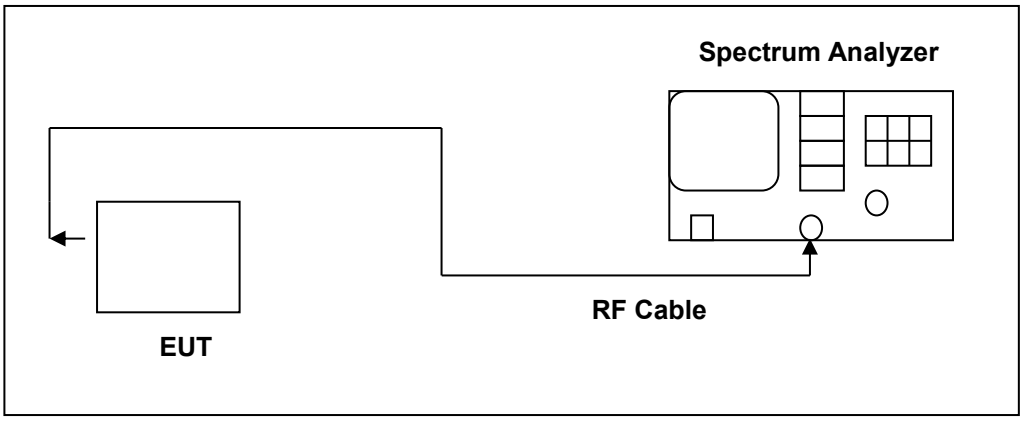


■ **Test Procedure**

1. Place the EUT on the table and set it in the transmitting mode.
2. Remove the antenna from the EUT and then connect a low loss RF cable from the antenna port to the spectrum analyzer.
3. Set the environment into appropriate environment.
4. Set the spectrum analyzer as RBW = 10 kHz, VBW = 30 kHz, Span = 1 MHz, Sweep = 12.4 ms.
5. Mark the peak frequency and measure the frequency tolerance using frequency counter function.
6. Repeat until all the results are investigated.

## 4.5. Antenna Requirement

- **Limit**

For intentional device, according to 15.203, an intentional radiator shall be designed to ensure that no antenna other than that furnished by the responsible party shall be used with the device.

- **Antenna Connector Construction**

See section 2 – antenna information.

# 5 Test Results

## 5.1. Conducted Emission

| | | | |
|---|---|---|---|
| Standard: | FCC Part 15.231 | Line: | L1 |
| Test item: | Conducted Emission | Power: | AC 120 V/60 Hz |
| Mode: | Transmit Mode | | |
| Description: | | | |

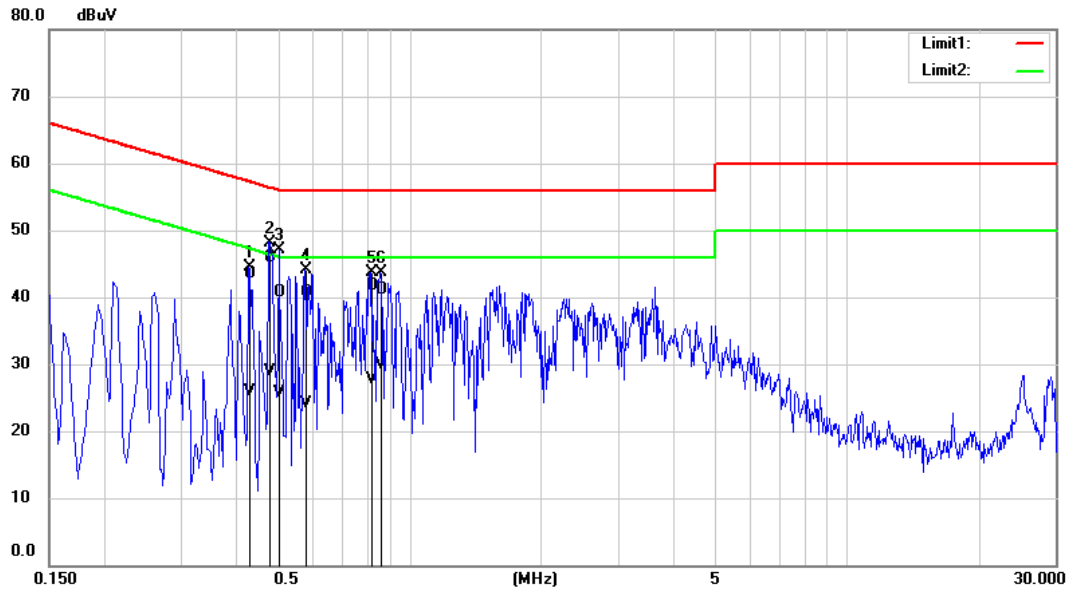


| No. | Frequency (MHz) | QP reading (dBuV) | AVG reading (dBuV) | Correction factor (dB) | QP result (dBuV) | AVG result (dBuV) | QP limit (dBuV) | AVG limit (dBuV) | QP margin (dB) | AVG margin (dB) | Remark |
|---|---|---|---|---|---|---|---|---|---|---|---|
| 1 | 0.4300 | 33.97 | 16.37 | 9.63 | 43.60 | 26.00 | 57.25 | 47.25 | -13.65 | -21.25 | Pass |
| 2 | 0.4780 | 36.35 | 19.36 | 9.63 | 45.98 | 28.99 | 56.37 | 46.37 | -10.39 | -17.38 | Pass |
| 3 | 0.5020 | 31.10 | 16.05 | 9.63 | 40.73 | 25.68 | 56.00 | 46.00 | -15.27 | -20.32 | Pass |
| 4 | 0.5780 | 31.04 | 14.56 | 9.63 | 40.67 | 24.19 | 56.00 | 46.00 | -15.33 | -21.81 | Pass |
| 5 | 0.8140 | 31.98 | 18.07 | 9.65 | 41.63 | 27.72 | 56.00 | 46.00 | -14.37 | -18.28 | Pass |
| 6 | 0.8580 | 31.52 | 20.30 | 9.65 | 41.17 | 29.95 | 56.00 | 46.00 | -14.83 | -16.05 | Pass |

Note: 1. Result (dBuV) = Correction factor (dB) + Reading(dBuV).

2. Correction factor (dB) = Cable loss (dB) + L.I.S.N. factor (dB).

| | | | |
|---|---|---|---|
| Standard: | FCC Part 15.231 | Line: | N |
| Test item: | Conducted Emission | Power: | AC 120 V/60 Hz |
| Mode: | Transmit Mode | | |
| Description: | | | |

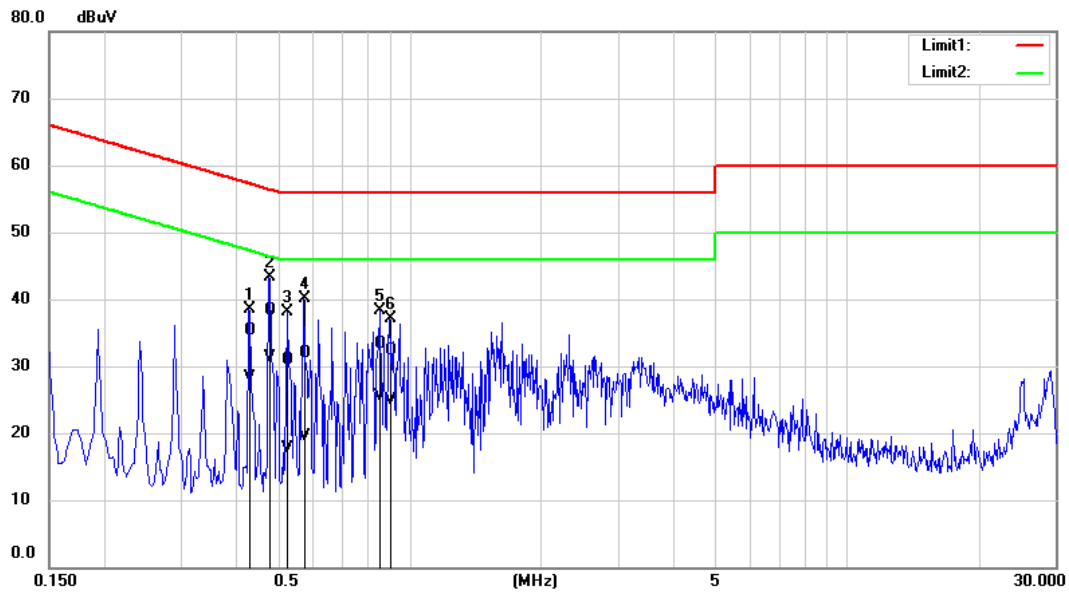


| No. | Frequency (MHz) | QP reading (dBuV) | AVG reading (dBuV) | Correction factor (dB) | QP result (dBuV) | AVG result (dBuV) | QP limit (dBuV) | AVG limit (dBuV) | QP margin (dB) | AVG margin (dB) | Remark |
|---|---|---|---|---|---|---|---|---|---|---|---|
| 1 | 0.4300 | 25.61 | 18.62 | 9.62 | 35.23 | 28.24 | 57.25 | 47.25 | -22.02 | -19.01 | Pass |
| 2 | 0.4780 | 28.75 | 21.73 | 9.62 | 38.37 | 31.35 | 56.37 | 46.37 | -18.00 | -15.02 | Pass |
| 3 | 0.5260 | 21.29 | 7.99 | 9.62 | 30.91 | 17.61 | 56.00 | 46.00 | -25.09 | -28.39 | Pass |
| 4 | 0.5740 | 22.24 | 9.94 | 9.62 | 31.86 | 19.56 | 56.00 | 46.00 | -24.14 | -26.44 | Pass |
| 5 | 0.8540 | 23.61 | 15.93 | 9.64 | 33.25 | 25.57 | 56.00 | 46.00 | -22.75 | -20.43 | Pass |
| 6 | 0.9020 | 22.71 | 15.27 | 9.65 | 32.36 | 24.92 | 56.00 | 46.00 | -23.64 | -21.08 | Pass |

Note: 1. Result (dBuV) = Correction factor (dB) + Reading(dBuV).

2. Correction factor (dB) = Cable loss (dB) + L.I.S.N. factor (dB).

## 5.2. Radiated Emission Measurement

**Fundamental**

| | | | |
|---|---|---|---|
| Standard: | FCC Part 15.231 | Test Distance: | 3 m |
| Test item: | Fundamental | | |
| Mode: | RFID | | |
| Ant.Polar.: | Horizontal | | |

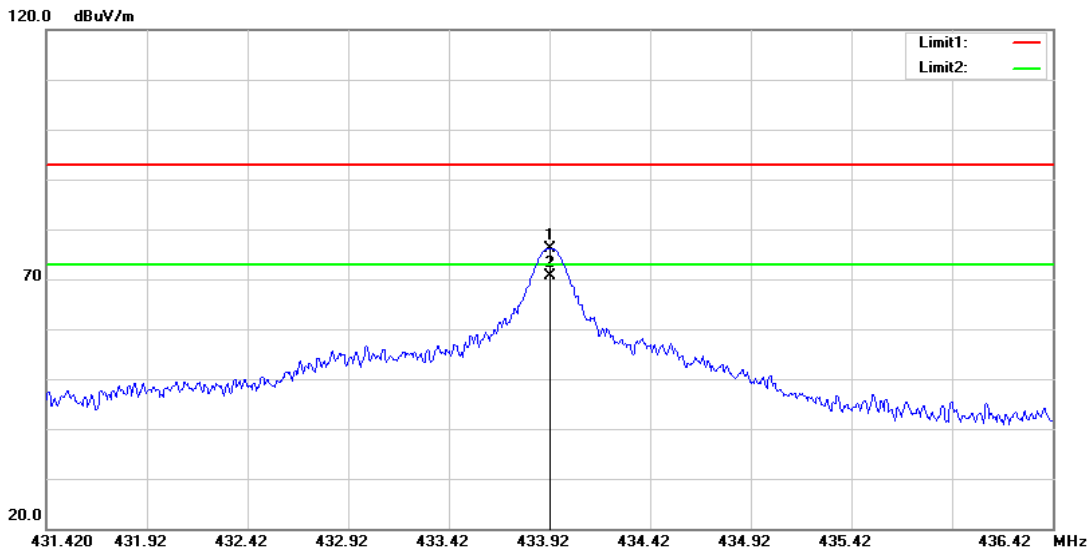


| No. | Frequency (MHz) | Reading (dBuV) | Correct Factor (dB/m) | Result (dBuV/m) | Limit (dBuV/m) | Margin (dB) | Remark |
|---|---|---|---|---|---|---|---|
| 1 | 433.9200 | 78.64 | -2.40 | 76.24 | 92.87 | -16.63 | peak |
| 2* | 433.9200 | 73.13 | -2.40 | 70.73 | 72.87 | -2.14 | AVG |

| | | | |
|---|---|---|---|
| Standard: | FCC Part 15.231 | Test Distance: | 3 m |
| Test item: | Fundamental | | |
| Mode: | RFID | | |
| Ant.Polar.: | Vertical | | |

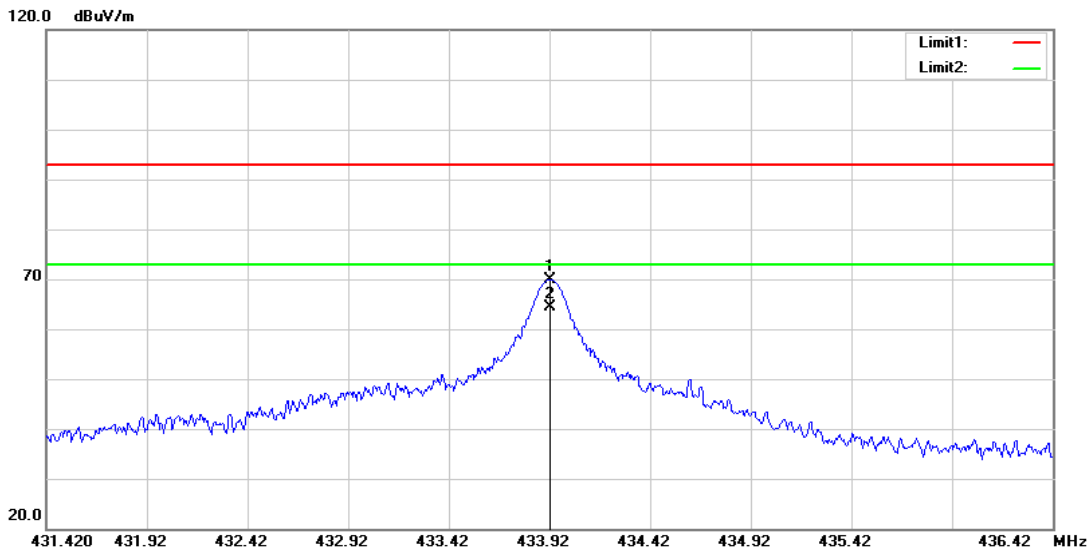


| No. | Frequency (MHz) | Reading (dBuV) | Correct Factor (dB/m) | Result (dBuV/m) | Limit (dBuV/m) | Margin (dB) | Remark |
|---|---|---|---|---|---|---|---|
| 1 | 433.9200 | 72.27 | -2.40 | 69.87 | 92.87 | -23.00 | peak |
| 2* | 433.9200 | 66.76 | -2.40 | 64.36 | 72.87 | -8.51 | AVG |

Below 1 GHz

| | | | |
|---|---|---|---|
| Standard: | FCC Part 15.231 | Test Distance: | 3 m |
| Test item: | Radiated Emission | | |
| Mode: | Transmit Mode | | |
| Ant.Polar.: | Horizontal | | |

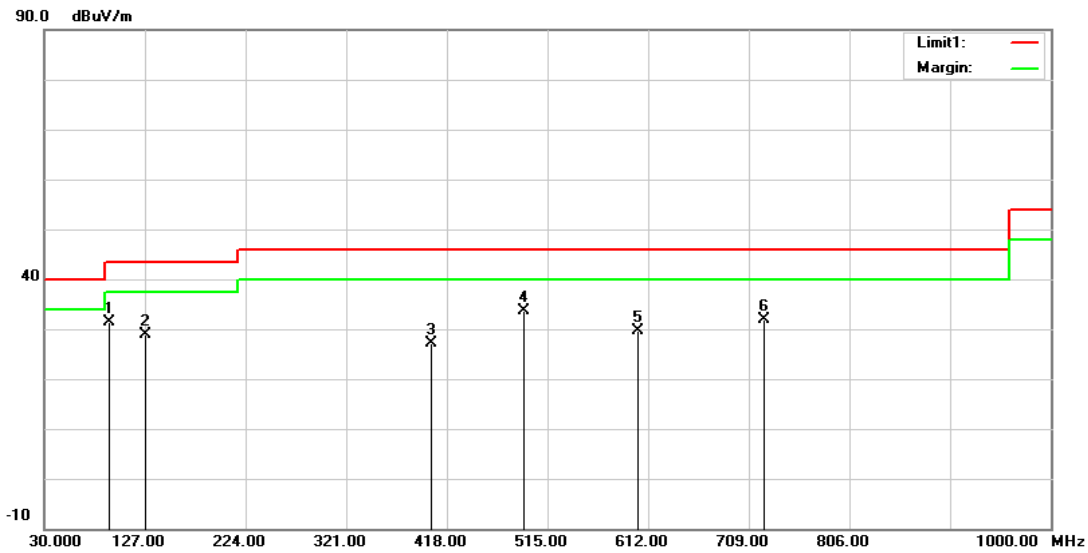


| No. | Frequency (MHz) | Reading (dBuV) | Correct Factor (dB/m) | Result (dBuV/m) | Limit (dBuV/m) | Margin (dB) | Remark |
|---|---|---|---|---|---|---|---|
| 1* | 93.0500 | 44.48 | -13.05 | 31.43 | 43.50 | -12.07 | QP |
| 2 | 127.0000 | 38.07 | -9.14 | 28.93 | 43.50 | -14.57 | QP |
| 3 | 403.4500 | 30.17 | -3.14 | 27.03 | 46.00 | -18.97 | QP |
| 4 | 491.7200 | 35.66 | -1.94 | 33.72 | 46.00 | -12.28 | QP |
| 5 | 602.3000 | 29.00 | 0.63 | 29.63 | 46.00 | -16.37 | QP |
| 6 | 723.5500 | 28.90 | 2.90 | 31.80 | 46.00 | -14.20 | QP |

| | | | |
|---|---|---|---|
| Standard: | FCC Part 15.231 | Test Distance: | 3 m |
| Test item: | Radiated Emission | | |
| Mode: | Transmit Mode | | |
| Ant.Polar.: | Vertical | | |

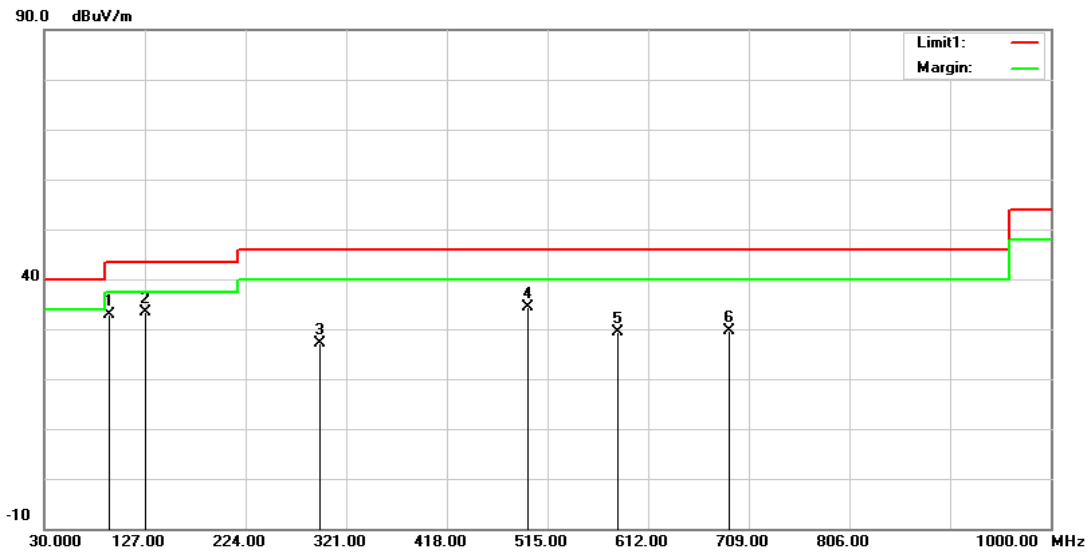


| No. | Frequency (MHz) | Reading (dBuV) | Correct Factor (dB/m) | Result (dBuV/m) | Limit (dBuV/m) | Margin (dB) | Remark |
|---|---|---|---|---|---|---|---|
| 1 | 93.0500 | 45.97 | -13.05 | 32.92 | 43.50 | -10.58 | QP |
| 2* | 127.0000 | 42.42 | -9.14 | 33.28 | 43.50 | -10.22 | QP |
| 3 | 295.7800 | 32.93 | -5.77 | 27.16 | 46.00 | -18.84 | QP |
| 4 | 495.6000 | 36.32 | -1.93 | 34.39 | 46.00 | -11.61 | QP |
| 5 | 582.9000 | 29.32 | 0.12 | 29.44 | 46.00 | -16.56 | QP |
| 6 | 689.6000 | 27.58 | 2.16 | 29.74 | 46.00 | -16.26 | QP |

**Harmonic**

Above 1 GHz

| | | | |
|---|---|---|---|
| Standard: | FCC Part 15.231 | Test Distance: | 3 m |
| Test item: | Harmonic | | |
| Mode: | RFID | | |
| Ant.Polar.: | Horizontal | | |

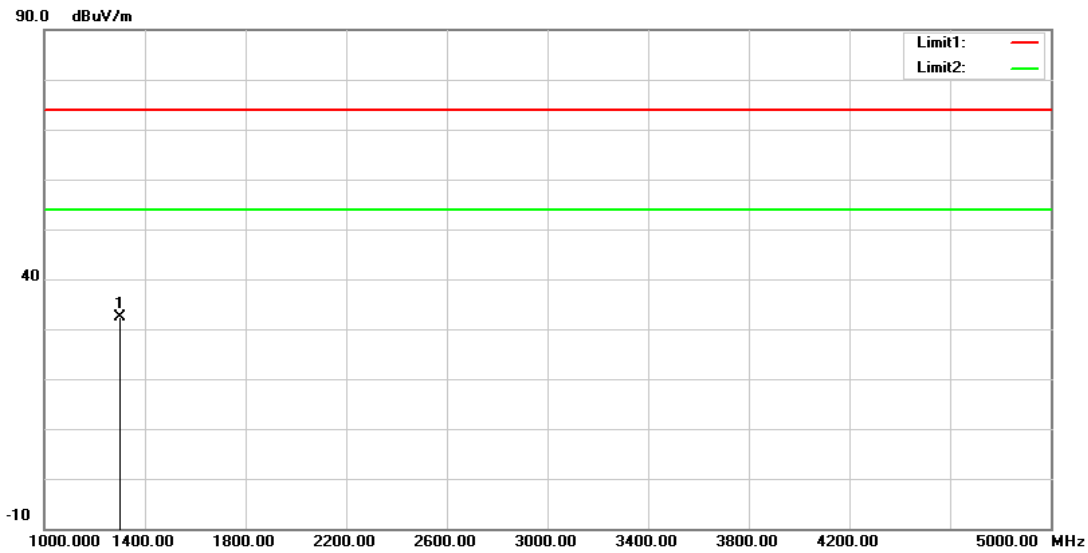


| No. | Frequency (MHz) | Reading (dBuV) | Correct Factor (dB/m) | Result (dBuV/m) | Limit (dBuV/m) | Margin (dB) | Remark |
|---|---|---|---|---|---|---|---|
| 1* | 1301.760 | 42.34 | -9.96 | 32.38 | 74.00 | -41.62 | peak |

| | | | |
|---|---|---|---|
| Standard: | FCC Part 15.231 | Test Distance: | 3 m |
| Test item: | Harmonic | | |
| Mode: | RFID | | |
| Ant.Polar.: | Vertical | | |

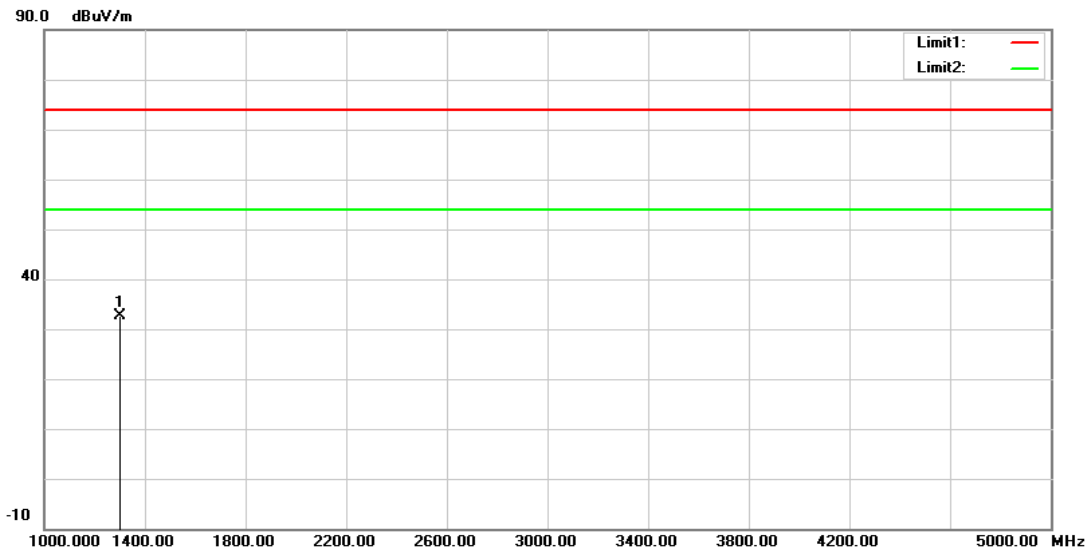


| No. | Frequency (MHz) | Reading (dBuV) | Correct Factor (dB/m) | Result (dBuV/m) | Limit (dBuV/m) | Margin (dB) | Remark |
|---|---|---|---|---|---|---|---|
| 1* | 1301.760 | 42.62 | -9.96 | 32.66 | 74.00 | -41.34 | peak |

**Band Edge**

| | | | |
|---|---|---|---|
| Standard: | FCC Part 15.231 | Test Distance: | 3 m |
| Test item: | Band edge | | |
| Mode: | RFID | | |
| Ant.Polar.: | Horizontal | | |

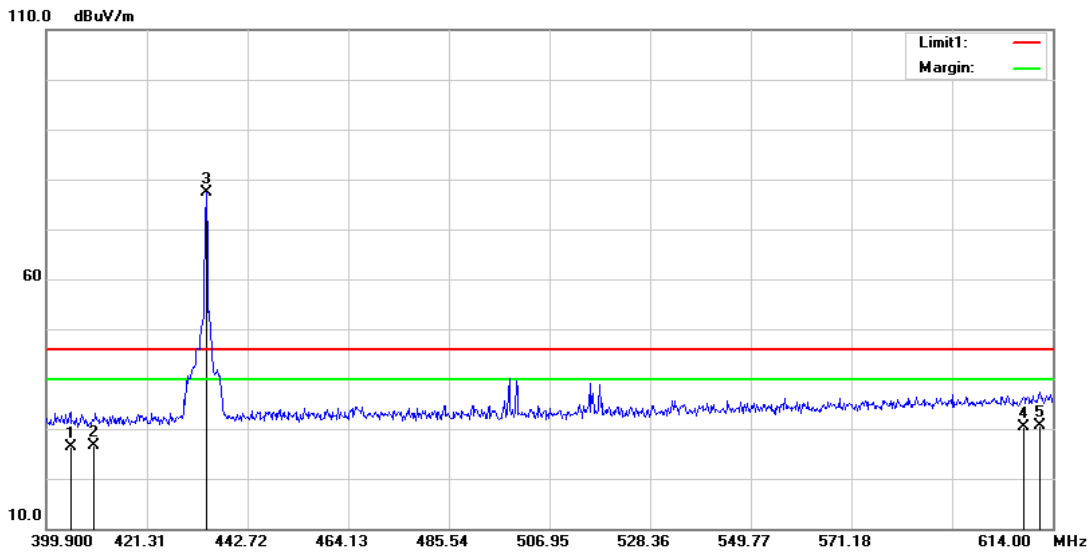


| No. | Frequency (MHz) | Reading (dBuV) | Correct Factor (dB/m) | Result (dBuV/m) | Limit (dBuV/m) | Margin (dB) | Remark |
|---|---|---|---|---|---|---|---|
| 1 | 405.0384 | 29.54 | -3.10 | 26.44 | 46.00 | -19.56 | QP |
| 2 | 410.0000 | 29.65 | -2.97 | 26.68 | 46.00 | -19.32 | QP |
| 3* | 433.9418 | 79.75 | -2.40 | 77.35 | 46.00 | 31.35 | peak |
| 4 | 608.0000 | 29.75 | 0.72 | 30.47 | 46.00 | -15.53 | QP |
| 5 | 611.2164 | 29.79 | 0.77 | 30.56 | 46.00 | -15.44 | QP |

| | | | |
|---|---|---|---|
| Standard: | FCC Part 15.231 | Test Distance: | 3 m |
| Test item: | Band edge | | |
| Mode: | RFID | | |
| Ant.Polar.: | Vertical | | |

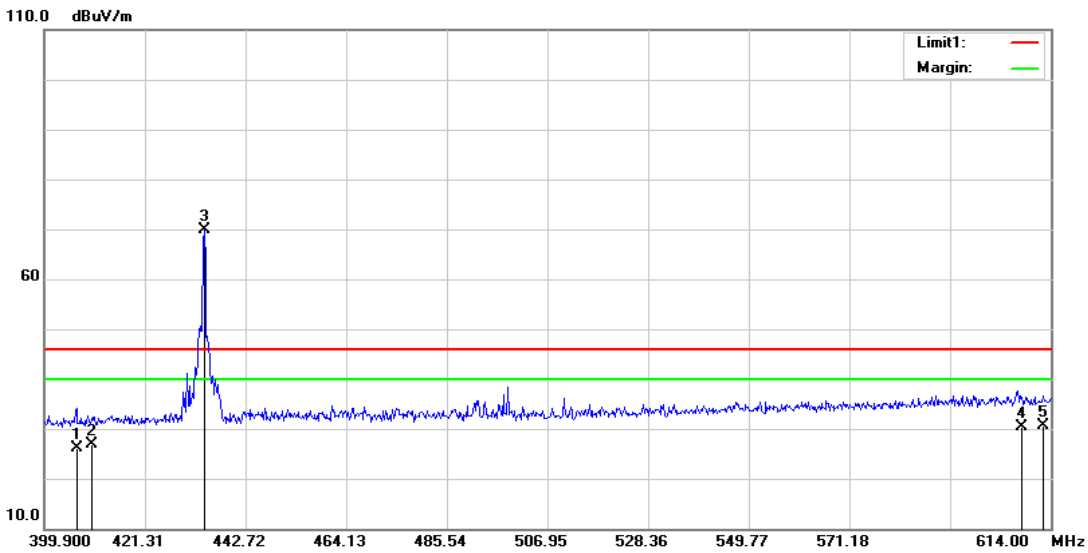


| No. | Frequency (MHz) | Reading (dBuV) | Correct Factor (dB/m) | Result (dBuV/m) | Limit (dBuV/m) | Margin (dB) | Remark |
|---|---|---|---|---|---|---|---|
| 1 | 406.7511 | 29.23 | -3.06 | 26.17 | 46.00 | -19.83 | QP |
| 2 | 410.0000 | 29.93 | -2.97 | 26.96 | 46.00 | -19.04 | QP |
| 3* | 433.9418 | 72.19 | -2.40 | 69.79 | 46.00 | 23.79 | peak |
| 4 | 608.0000 | 29.60 | 0.72 | 30.32 | 46.00 | -15.68 | QP |
| 5 | 612.2871 | 29.83 | 0.79 | 30.62 | 46.00 | -15.38 | QP |

## 5.3. Conducted Test Results

**Duration of transmission**

| Test Mode | RFID | | | |
|---|---|---|---|---|
| Frequency (MHz) | Duration Time | | Silent Time | |
| | Results (ms) | Limit (s) | Results (ms) | Limit (s) |
| 433.92 | 720 | ≦1 | Pass | ≧21.6 |

Note:1. Duration time=total sum tx on time is 720 ms (560 ms + 160 ms)

2. Silent Time Limit (s) = 30 * Duration Time (ms) = 30 * 720 (ms) = 21.6 (s)

■ **Test Graphs**

| RFID | |
|---|---|
| Duration Time | |
| Silent Time | |

**Bandwidth measurement**

| Test Mode | RFID | | |
|---|---|---|---|
| Frequency (MHz) | Bandwidth Emission (kHz) | Limit (kHz) | Result |
| 433.92 | 6.156 | 1084.8 | Pass |

■ **Test Graphs**

| RFID | |
|---|---|
| Bandwidth Emission | 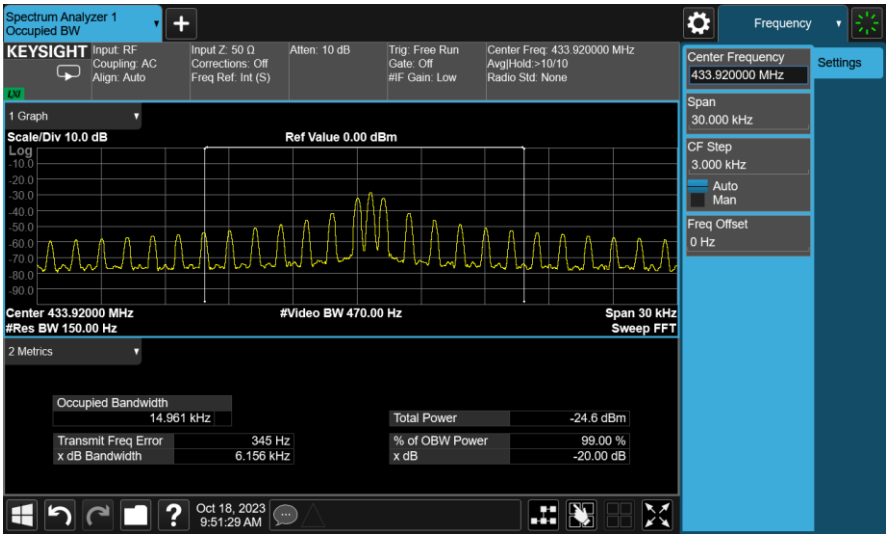 |



---END---