Installation

NETGEAR®

D3600/D3610 Wireless N600 DSL Modem Router
D6000/D6010 Wireless AC750 DSL Modem Router

Package Contents

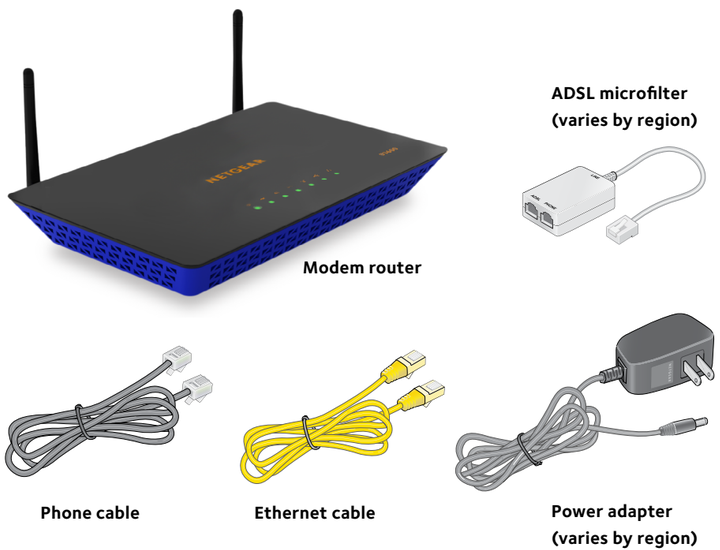

You can connect the modem router either to a DSL service or to a cable or fiber modem. Choose one connection method only. Do not use both.

Connect the Modem Router to a DSL Service

1. **Connect the modem router to the Internet.**
   a. Install an ADSL microfilter between the phone line and the phone.
   b. Use a phone cable to connect the microfilter to the gray DSL port on the modem router.

   For additional information about connecting to a DSL service, see the other side of this installation guide.
2. **Power on the modem router.**
   Connect the power adapter to the modem router and plug it into an electrical outlet.

   Wait for the Power LED to light green.
3. **Connect a computer.**
   Use an Ethernet cable to connect your computer to any yellow Ethernet port on the modem router.

   You can also use WiFi to connect. To connect with WiFi, use the WiFi network name and password on the product label.
4. **Log in to the modem router.**
   Launch a web browser. NETGEAR genie displays.

   If you do not see genie:

   In the address field of the web browser, enter **www.routerlogin.net**. When prompted, enter **admin** for the user name and **password** for the password.

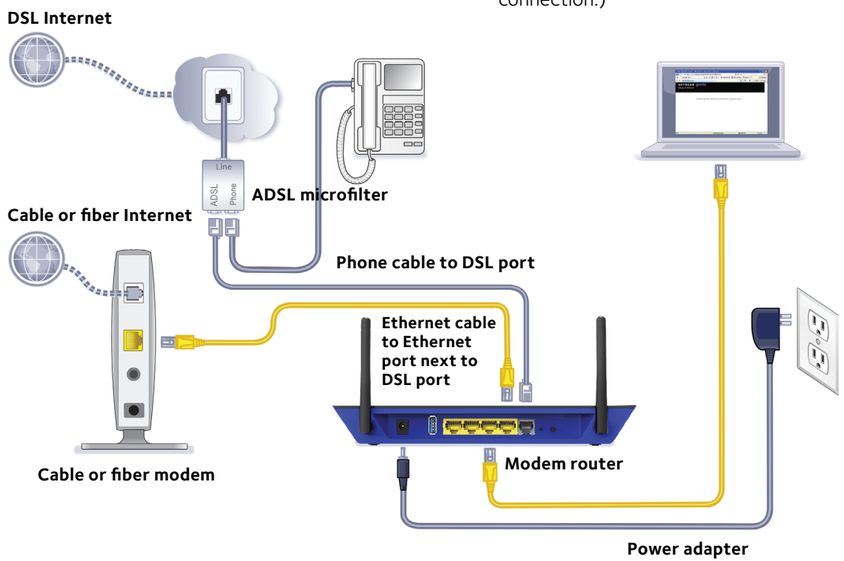

Connect the Modem Router to a Cable or Fiber Modem

1. **Connect the modem router to the Internet.**
   Use an Ethernet cable to connect the cable or fiber modem to the yellow Ethernet port next to the gray DSL port on the modem router. (Do not use another Ethernet port fort this connection.)
2. **Power on the modem router.**
   Connect the power adapter to the modem router and plug it into an electrical outlet.

   Wait for the Power LED to light green.
3. **Connect a computer.**
   Use an Ethernet cable to connect your computer to any yellow Ethernet port on the modem router.

   You can also use WiFi to connect. To connect with WiFi, use the WiFi network name and password on the product label.
4. **Log in to the modem router.**
   Launch a web browser. NETGEAR genie displays.

   If you do not see genie:

   In the address field of the web browser, enter **www.routerlogin.net**. When prompted, enter **admin** for the user name and **password** for the password.
5. **In genie, change the default connection method.**
   a. Select **BASIC > xDSL** from the NETGEAR genie menu.
   b. From the **Physical WAN Type** menu, select **Ethernet WAN**.
   c. Click the **Apply** button.

Information for DSL Service

You can connect directly to a DSL line or to a fiber or cable modem.

If you are connecting to a DSL line, make sure that your DSL service is active before you install the modem router. You need the following information to install your DSL modem and connect to the Internet:

- **DSL user name and password**. This information is included in the welcome letter your DSL ISP sent you when you signed up for your service. Record your DSL Internet service account user name and password.
- **Your telephone number or DSL account number**. If you do not have voice service, you can use your DSL account number in place of a phone number.

If you do not know or cannot locate your DSL user name and password, call your DSL Internet service provider (ISP). Be specific when speaking with your DSL Internet service provider. For example, you could say, "I need my DSL service user name and password. Can you help me?"

Note: If your provider says that they do not support NETGEAR services, tell them that you need only your DSL user name and password; you do not need support.

Beta document April 2014

NETGEAR, Inc.
350 East Plumeria Drive
San Jose, CA 95134, USA

Join the Modem Router's WiFi Network

To connect your computer or WiFi device (such as a smartphone or gaming device) to your modem router's WiFi network:

1. Open the software utility that manages your WiFi connections on the computer or WiFi device that you want to connect to your modem router.

   This utility scans for all wireless networks in your area.
2. Find and select your modem router's WiFi network name (SSID).

   The SSID is on the product label.
3. Enter the modem router's password (or your custom password if you changed it) and click the **Connect** button.

   The password is on the product label.
4. Repeat Step 1 through Step 3 to add other computers or WiFi devices.

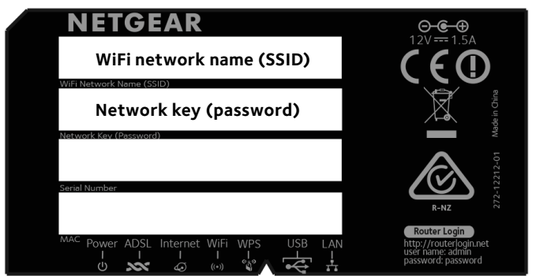

WiFi Network Name and Password

This product has a unique WiFi network name (SSID) and network key (password). The default SSID and password are uniquely generated for every device, like a serial number, to protect and maximize your wireless security. This information is on the product label.

NETGEAR recommends that you use the preset WiFi settings because you can check the router label if you forget them. NETGEAR genie lets you change these settings if you want. If you do so, write down the new WiFi settings and store them in a safe place.

Support

Thank you for purchasing this NETGEAR product.

After installing your device, locate the serial number on the label of your product and use it to register your product at *https://my.netgear.com*. You must register your product before you can use NETGEAR telephone support. NETGEAR recommends registering your product through the NETGEAR website.

For product updates and web support, visit *http://support.netgear.com*. NETGEAR recommends that you use only the official NETGEAR support resources.

You can get the user manual online at *http://downloadcenter.netgear.com* or through a link in the product's user interface.

For the current EU Declaration of Conformity, visit *http://support.netgear.com/app/answers/detail/a_id/11621*/.
For regulatory compliance information, visit *http://www.netgear.com/about/regulatory/*.

See the regulatory compliance document before connecting the power supply.

NETGEAR, the NETGEAR logo, and Connect with Innovation are trademarks and/or registered trademarks of NETGEAR, Inc. and/or its subsidiaries in the United States and/or other countries. Information is subject to change without notice. © NETGEAR, Inc. All rights reserved.

NETGEAR®

Notification of Compliance

Regulatory Compliance Information

This document includes user requirements for operating NETGEAR products in accordance with national laws including usage of radio spectrum and operation of radio devices. Failure of the end-user to comply with the applicable requirements may result in unlawful operation and adverse action against the end-user by the applicable national regulatory authority.

The NETGEAR product firmware limits operation to only the channels allowed in a particular region or country. Therefore, all options described in this document may not be available in your version of the product.

This document applies to both Class A and Class B devices:

- Class A devices are intended to be used in a commercial or industrial environment. They are not intended to be used in a residential home or be available for general public use.
- Class B devices are intended to be used in a residential setting, and may also be used in commercial and industrial applications. Examples of Class B devices are telephones, personal computers, and residential data gateways.
- Fuses should only be installed by service personnel.
- NETGEAR recommends the use of 26 AWG or larger gauge phone line cords.

Europe – EU Declaration of Conformity

This section applies to products bearing the CE or CE! mark:

CE CE!

Products bearing the CE or CE! mark comply with the following EU directives:

- EMC Directive 2004/108/EC
- Low Voltage Directive 2006/95/EC
- Ecodesign Directive 2009/125/EC
- RoHS Directive 2011/65/EU

If the product has telecommunications functionality, it also complies with the requirement of the following EU directive:

- R&TTE Directive 1999/5/EC

Compliance with these directives implies conformity to harmonized European standards that are noted in the EU Declaration of Conformity. The EU CE Declaration of Conformity may be found at http://support.netgear.com/app/answers/detail/a_id/11621/.

Caution for installing this equipment outdoors: (Valid in all EU member states, EFTA states, and Switzerland.) Be aware that outdoor installations require special attention and will only be handled by trained and qualified installation personnel. No one from the general public is permitted to install NETGEAR wireless products outdoors when external antennas, power and grounding must be installed for use. Particular attention has to be given allowed operational frequencies. Contact NETGEAR for instructions on how to contact an installer for outdoor operations if this product requires the special considerations for outdoor installations. For detailed iformation concerning installations in France, the user should contact the national spectrum authority in France (http://www.arcep.fr/)

The following paragraphs apply to WN2500RP:

This device is a 2.4GHz and 5GHz wideband transmission system (transceiver), intended for indoor use only in all EU member states, EFTA states, and Switzerland.

In Italy the end-user should apply for a license at the national spectrum authorities in order to obtain authorization to use the device for setting up outdoor radio links and/or for applying public access to telecommunications and/or network services.

This device may not be used for setting up outdoor radio links in France and in some areas the RF output power may be limited to 10mW EIRP in the frequency range of 2454-2483.5 MHz. For detailed information the end-user should contact the national spectrum authority in France.

Warning

NETGEAR Class A products that may be utilized in domestic/residential environments may cause radio interference in which case the user may be required to take adequate measures.

FCC Requirements for Operation in the United States

Information in this section applies to products bearing the FCC mark (or statement):

FCC Information to User

This NETGEAR product does not contain any user serviceable components and is to be used with approved antennas only. Any product changes or modifications will invalidate all applicable regulatory certifications and approvals.

The following statement applies to these products:

- C6300
- D6000
- D6010
- D3600
- D3610
- D6200V2
- EX2700
- EX6100
- EX6200
- HMNC100
- JNR1010v2
- JR6150
- JWNR2000v5
- JWNR2010v5
- R6050
- R7500
- R8000
- STS7000
- VEGN2200
- WN370
- WN2500RP
- WN3000RPv2
- WN3500RP
- WNDR3400v3
- WN1000v4
- WNR2010
- WNR2020
- WNR614
- WNR618

This device and its antenna(s) must not be co-located or operating in conjunction with any other antenna or transmitter except in accordance with FCC multi-transmitter product procedures.

FCC Guidelines for Human Exposure

The NETGEAR product complies with FCC radiation exposure limits set forth for an uncontrolled environment. The equipment should be installed and operated with minimum distance of 20cm between the radiator and your body.

The following statement applies to this product:

- C6300XB3

This product complies with FCC radiation exposure limits set forth for an uncontrolled environment. The device should be installed and operated with minimum distance of 25cm between the radiator and your body.

The following statement applies to this product:

- R8000

This product complies with FCC radiation exposure limits set forth for an uncontrolled environment. The device should be installed and operated with minimum distance of 30cm between the radiator and your body.

FCC Declaration of Conformity

We, NETGEAR, Inc., 350 East Plumeria Drive, San Jose, CA 95134, declare under our sole responsibility that this product complies with Part 15 Subpart B of FCC CFR47 Rules. Operation is subject to the following two conditions:

- The device may not cause harmful interference, and
- The device must accept any interference received, including interference that may cause undesired operation.

FCC Radio Frequency Interference Warnings & Instructions

The NETGEAR product has been tested and found to comply with the limits for a Class B digital device, pursuant to Part 15 of the FCC Rules. These limits are designed to provide reasonable protection against harmful interference in a residential installation. This equipment uses and can radiate radio frequency energy and, if not installed and used in accordance with the instructions, may cause harmful interference to radio communications. However, there is no guarantee that interference will not occur in a particular installation. If this equipment does cause harmful interference to radio or television reception, which can be determined by turning the equipment off and on, the user is encouraged to try to correct the interference by one or more of the following methods:

- Reorient or relocate the receiving antenna.
- Increase the separation between the equipment and the receiver.
- Connect the equipment into an electrical outlet on a circuit different from that which the radio receiver is connected.
- Consult the dealer or an experienced radio/TV technician for help.

FCC RF Radiation Exposure and SAR Statements

The information in this section applies to products that transmit data or communicate wirelessly.

SAR Statement

The information in this section applies to NETGEAR wireless products that are intended to be operated close to human body.

NETGEAR products that are intended to be operated close to the human body are tested for body-worn Specific Absorption Rate (SAR) compliance. The SAR limit set by the FCC is 1.6 W/kg.

The FCC has established detailed SAR requirements and NETGEAR products meet these requirements.

NETGEAR products comply with ANSI/IEEE C95.1-1999 and are tested in accordance with the measurement methods and procedures specified in OET Bulletin 65 Supplement C.

NETGEAR products that are installed in USB ports demonstrate SAR compliance using a typical laptop computer with a USB port. Other applications, such as handheld computers or similar devices, have not been verified and might not compliance with related RF exposure rule and such use is prohibited.

RF Exposure Information

NETGEAR products have been evaluated under FCC Bulletin OET 65C (01-01) and found to be compliant to the requirements as set forth in CFR 47 Sections, 2.1093, and 15.247 (b) (4) addressing RF exposure from radio

frequency devices. NETGEAR products meet the applicable government requirements for exposure to radio frequency waves. To see the test results reporting the highest SAR level measured for this device, visit http://www.netgear.com/about/regulatory/declarations-conformity/

Radiation exposure: NETGEAR products comply with radiation exposure limits set forth for an uncontrolled environment and meet radio frequency (RF) exposure guidelines for wireless routers. NETGEAR products should be installed and operated keeping the product 20cm or more away from a person's body. For devices that are battery powered and may be operated closer than 20cm to you, refer to the NETGEAR website for exposure levels.

NETGEAR USB dongle transmitters are approved for use in typical laptop computers. To comply with FCC RF exposure requirements, do not use NETGEAR USB dongle transmitters in other devices or certain laptop and tablet computer configurations where the USB connectors on the host computer are unable to provide or ensure the necessary operating configurations intended for the device and its users or bystanders to satisfy RF exposure compliance requirements.

FCC Caution

Any changes or modifications not expressly approved by the party responsible for compliance could void the user's authority to operate this equipment.

NETGEAR products comply with Part 15 of the FCC rules. Operation is subject to the following two conditions: (1) NETGEAR products may not cause harmful interference, and (2) NETGEAR products must accept any interference received, including interference that may cause undesired operation.

For products available in the USA market, only channel 1~11 can be operated. Selection of other channels is not possible.

The following statement applies to these products:

- C6300
- D6000
- D6010
- D3600
- D3610
- D6200V2
- EX2700
- EX6100
- EX6200
- HMNC100
- JNR1010v2
- JR6150
- JWNR2000v5
- JWNR2010v5
- R6050
- R7500
- R8000
- VEGN2200
- WAC120
- WN370
- WN2500RP
- WN3000RPv2
- WN3000RPv3
- WN3500RP
- WNDR3400v3
- WNR1000v4
- WNR2010
- WNR2020
- WNR614
- WNR618

The device and its antenna(s) must not be co-located or operating in conjunction with any other antenna or transmitter except in accordance with FCC multi-transmitter product procedures.

The following statement applies to these products:

- A6210
- C6300
- C6300XB3
- D6000
- D6010
- D3600
- D3610
- D6200V2
- EX6100
- EX6200
- HMNC100
- JR6150
- R6050
- R7500
- R8000
- STS7000
- WN2500RP
- WNDR3400v3

The device operates in 5.15~5.25GHz frequency range. It is restricted in indoor environment only.

The following statements apply to this product:

- A6210
- WAC120
- WNDR3400v3

The device operates in 5.15 ~ 5.25GHz / 5.47 ~5.725GHz frequency range. It is restricted in indoor environment only. The band from 5600-5650MHz will be disabled by the software during the manufacturing and cannot be changed by the end user. This device meets all the other requirements specified in Part 15E, Section 15.407 of the FCC Rules.

Non-DFS Warning
NETGEAR non-DFS products do not support operation in the 5600-5650MHz band. The firmware on the device restricts the operation in this frequency band and does not utilize the channels in this band.

NETGEAR non-DFS products will not permit operations on channels 120–132 for 11a and 11n/a, which overlap the 5600–5650MHz band.

The following statements apply to these products:

- A6210
- HMNC100
- R8000
- WNDR3400v3

NETGEAR DFS products do not support operation in the 5600-5650MHz band. The firmware on the device restricts the operation in this frequency band and does not utilize the channels in this band.

NETGEAR DFS products will not permit operations on channels 120–132 for 11a and 11n/a, which overlap the 5600–5650MHz band.

Country Code Selection Usage (WLAN devices)

The country code selection is for non-US model only and is not available to all US model. Per FCC regulation, all WiFi product marketed in US must fixed to US operation channels only.

TV Tuner (on Selected Models)

The information in this section applies to NETGEAR products incorporating a TV tuner.

Note to CATV System Installer: This reminder is provided to call the CATV system installer's attention to Section 820-93 of the National Electrical Code, which provides guidelines for proper grounding and, in particular, specifies that the Coaxial cable shield be connected to the grounding system of the building as close to the point of cable entry as possible.

Canadian Department of Communications Radio Interference Regulations

The information in this section applies to products bearing the statements:.

> "This digital apparatus does not exceed the Class B limits for radio-noise emissions from digital apparatus as set out in the Radio Interference Regulations of the Canadian Department of Communications."
>
> "Cet appareil numérique ne dépasse pas les limites de la classe B pour les émissions radio bruit des appareils numériques, tel qu'énoncé dans le Règlement sur le brouillage radioélectrique du ministère des Communications du Canada."
>
> CAN ICES-3 (B)/NMB-3(B)

CAN ICES-3 (A)/NMB-3(A)

Industry Canada

NETGEAR products comply with Industry Canada license-exempt RSS standard(s). Operation is subject to the following two conditions: (1) NETGEAR products may not cause harmful interference, and (2) NETGEAR products must accept any interference received, including interference that may cause undesired operation.

- A6210
- D6000
- D6010
- D3600
- D3610
- EX2700
- HMNC100
- JNR1010v2
- JR6150
- JWNR2000v5
- JWNR2010v5
- R6050
- R7500
- R8000
- WAC120
- WN3000RPv3
- WN370
- WNDR3400v3
- WNR1000v4
- WNR2010
- WNR2020
- WNR614
- WNR618

Ce dispositif est conforme à la norme CNR d'Industrie Canada applicable aux appareils radio exempts de licence. Son fonctionnement est sujet aux deux conditions suivantes: (1) le dispositif ne doit pas produire de brouillage préjudiciable, et (2) ce dispositif doit accepter tout brouillage reçu, y compris un brouillage susceptible de provoquer un fonctionnement indésirable.

- A6210
- D6000
- D6010
- D3600
- D3610
- EX2700
- HMNC100
- JNR1010v2
- JR6150
- JWNR2000v5
- JWNR2010v5
- R6050
- R7500
- R8000
- WAC120
- WN3000RPv3
- WN370
- WNDR3400v3
- WNR1000v4
- WNR2010
- WNR2020
- WNR614
- WNR618

IMPORTANT NOTE: Radiation Exposure Statement

NETGEAR products comply with IC radiation exposure limits set forth for an uncontrolled environment. NETGEAR products should be installed and operated with minimum distance 20cm between the radiator and your body.

The following statement applies to this product:

- R8000

This product complies with IC radiation exposure limits set forth for an uncontrolled environment. NETGEAR products should be installed and operated with minimum distance 30cm between the radiator and your body.

NETGEAR products comply with the Canada portable RF exposure limit set forth for an uncontrolled environment and are safe for intended operation as described in its manual. Further RF exposure reduction can be achieved by keeping the product as far as possible from your body or by setting the device to a lower output power if such a function is available.

For products available in the USA/Canada market, only channel 1~11 can be operated. Selection of other channels is not possible.

The following statement applies to these products:

- D6000
- D6010
- D3600
- D3610
- D6200V2
- HMNC100
- JNR1010v2
- JR6150
- JWNR2000v5
- JWNR2010v5
- STS7000
- VEGN2200
- WN370
- WN2500RP
- WN3000RPv2
- WNR2010
- WNR2020
- WNR614
- WNR618

- EX2700
- EX6100
- EX6200
- R6050
- R7500
- R8000
- WN3000RPv3
- WNDR3400v3
- WNR1000v4

The device and its antenna(s) must not be co-located or operating in conjunction with any other antenna or transmitter except in accordance with IC multi-transmitter product procedures.

The following statement applies to these products:

- A6210
- D6000
- D6010
- D3600
- D3610
- D6200V2
- EX6100
- EX6200
- HMNC100
- JR6150
- R6050
- R7500
- R8000
- STS7000
- WAC120
- WN2500RP
- WNDR3400v3

The device for the band 5150-5250 MHz is only for indoor usage to reduce potential for harmful interference to co-channel mobile satellite systems.

DFS warning:
NETGEAR DFS (Dynamic Frequency Selection) products that operate in the bands 5250- 5350 MHz, 5470-5600MHz, and 5650-5725MHz:

The following statements apply to this product:

- A6210
- C6300XB3
- HMNC100
- R8000
- STS7000
- WAC120
- WNDR3400v3

The maximum antenna gain permitted for devices in the bands 5250-5350 MHz and 5470-5725 MHz to comply with the EIRP (Equivalent Isotropically Raditaed Power) limit.

Users should also be advised that high-power radars are allocated as primary users (i.e. priority users) of the bands 5250-5350 MHz and 5650-5850 MHz and that these radars could cause interference and/or damage to LE-LAN devices.

The following statement applies to this product:

- WAC120

The maximum antenna gain permitted for devices in the band 5725-5825 MHz shall comply with the EIRP (Equivalent Isotropically Raditaed Power) limits specified for point-to-point and non point-to-point operation as appropriate.

SAR warning:
NETGEAR product is compliance with SAR for general population/uncontrolled exposure limits in IC RSS-102 and had been tested in accordance with the measurement methods and procedures specified in IEEE 1528.

NOTE IMPORTANTE: Déclaration d'exposition aux radiations

Produits NETGEAR sont conformes aux limites IC d'exposition aux rayonnements définies pour un environnement non contrôlé. Produits NETGEAR doivent être installés et utilisés avec distance minimum de 20cm entre le radiateur et votre corps.

La déclaration suivante s'applique à ce produit :

- R8000

Ce produit est conforme aux limites IC d'exposition aux rayonnements définies pour un environnement non contrôlé. Produits NETGEAR doivent être installés et utilisés avec un minimum de 30cm entre le radiateur et votre corps.

Produits NETGEAR sont conformes à la limite d'exposition aux RF portable Canada établies pour un environnement non contrôlé et sont sans danger pour le fonctionnement prévu comme décrit dans le manuel. Poursuite de la réduction de l'exposition aux RF peut être réalisé en gardant le produit autant que possible de votre corps ou par le réglage du dispositif à une puissance de sortie inférieure si une telle fonction est disponible

Pour les produits disponibles aux États-Unis / Canada du marché, seul le canal 1 à 11 peuvent être exploités. Sélection d'autres canaux n'est pas possible.

La déclaration suivante s'applique à ces produits:

- D6000
- D6010
- D3600
- D3610
- D6200V2
- EX2700
- EX6100
- EX6200
- HMNC100
- JNR1010v2
- JR6150
- JWNR2000v5
- JWNR2010v5
- R6050
- R7500
- R8000
- STS7000
- VEGN2200
- WN370
- WN2500RP
- WN3000RPv2
- WN3000RPv3
- WNDR3400v3
- WNR1000v4
- WNR2010
- WNR2020
- WNR614
- WNR618

Cet appareil et son antenne (s) ne doit pas être co-localisés ou fonctionnement en association avec une autre antenne ou transmetteur.

La déclaration suivante s'applique à ces produits:

- A6210
- D6000
- D6010
- D3600
- D3610
- D6200V2
- EX6100
- EX6200
- HMNC100
- JR6150
- R6050
- R7500
- R8000
- STS7000
- WAC120
- WN2500RP
- WNDR3400v3

les dispositifs fonctionnant dans la bande 5150-5250 MHz sont réservés uniquement pour une utilisation à l'intérieur afin de réduire les risques de brouillage préjudiciable aux systèmes de satellites mobiles utilisant les mêmes canaux.

DFS avertissement:
Sélection dynamique de fréquences (DFS) pour les dispositifs fonctionnant dans les bandes 5250-5350 MHz, 5470-5600 MHz et 5650-5725 MHz :

Les instructions suivantes s'appliquent à ce produit:

- A6210

- C6300XB3
- HMNC100
- R8000
- STS7000
- WAC120
- WNDR3400v3

le gain maximal d’antenne permis pour les dispositifs utilisant les bandes 5250-5350 MHz et 5470-5725 MHz doit se conformer à la limite de p.i.r.e.

De plus, les utilisateurs devraient aussi être avisés que les utilisateurs de radars de haute puissance sont désignés utilisateurs principaux (c.-à-d., qu’ils ont la priorité) pour les bandes 5250-5350 MHz et 5650-5850 MHz et que ces radars pourraient causer du brouillage et/ou des dommages aux dispositifs LAN-EL.

La déclaration suivante s'applique à ce produit;

- WAC120

Avertissement SAR:
NETGEAR est le respect de SAR pour la population générale / limites d'exposition incontrôlée de CNR-102 et a été testé en conformité avec les méthodes et procédures de mesure spécifiées dans la norme IEEE 1528.

Interference Reduction Table

The table below shows the Recommended Minimum Distance between NETGEAR equipment and household appliances to reduce interference (in feet and meters).

Household Appliance	Recommended Minimum Distance (in feet and meters)
Microwave oven	30 feet / 9 meters
Baby monitor – analog	20 feet / 6 meters
Baby monitor – digital	40 feet / 12 meters
Cordless phone – analog	20 feet / 6 meters
Cordless phone – digital	30 feet / 9 meters
Bluetooth device	20 feet / 6 meters
ZigBee	20 feet / 6 meters

Japan Notices VCCI

This information in this section applies to products bearing the VCCI mark:

Class A ITE

この装置は、クラス A 情報技術装置です。この装置を家庭環境で使用すると電波妨害を引き起こすことがありま す。この場合には使用者が適切な対策を講ずるよう要求されることがあります。

Class B ITE

この装置は、クラスB情報技術装置です。この装置は、家庭環境で使用することを目的としていますが、この装置がラジオやテレビジョン受信機に近接して使用されると、受信障害を引き起こすことがあります。

取扱説明書に従って正しい取り扱いをして下さい。

Japan Wireless Notice

この製品には、認証済みの無線機器を搭載しています。

South Korea Notices

The information in this section applies to products bearing the KCC mark:

알림 : 대한민국으로 배송되는 제품인 경우

Class A : A급 기기 (업무용 방송통신기자재)	이 기기는 업무용(A급) 전자파적합기기로서 판매자 또는 사용자는 이 점을 주의하시기 바라며, 가정외의 지역에서 사용하는 것을 목적으로 합니다.
Class B : B급 기기 (가정용 방송통신기자재)	이 기기는 가정용(B급) 전자파적합기기로서 주로 가정에서 사용하는 것을 목적으로 하며, 모든 지역에서 사용할 수 있습니다.

Taiwan WWAN Wireless Notice

The information in this section applies to products bearing the Taiwan National Communications Commission mark:

This telecom equipment has complied with NCC regulations.

第十二條→經型式認證合格之低功率射頻電機，非經許可，公司，商號或使用者均不得擅自變更頻率、加大功率或變更原設計之特性及功能。

第十四條→低功率射頻電機之使用不得影響飛航安全及干擾合法通信；經發現有干擾現象時，應立即停用，並改善至無干擾時方得繼續使用。

前項合法通信，指依電信法規定作業之無線電通信。 低功率射頻電機須忍受合法通信或工業、科學及醫療用電波輻射性電機設備之干擾。

在 5.25-5.35 **秭赫頻帶**內操作之無線資訊傳輸設備，限於室內使用。

無線資訊傳輸設備忍受合法通信之干擾且不得干擾合法通信；如造成干擾，應立即停用，俟無干擾之虞，始得繼續使用。

無線資訊傳設備的製造廠商應確保頻率穩定性，如依製造廠商使用手冊上所述正常操作，發射的信號應維持於操作頻帶中。

不致造成違反低功率電波輻射性電機管理辦法之所有控制、調整及開關之使用方法

對任何可能造成違反管理辦法規定之調整予以警告，或建議由具有發射機維修專長之技術人員執行或由其直接監督及負責

對任何可能造成違反管理辦法之零件(晶體、半導體等)置換之警告

下列聲明適用於本產品:

R7500

電磁波曝露量MPE標準值1mW/cm2，送測產品實測值為：0.783945 mW/cm2

Thailand Notice

The information in this section applies to products approved by the Thailand National Communications Commission:

เครื่องโทรคมนาคมและอุปกรณ์นี้ มีความสอดคล้องตามข้อกำหนดของ กทช.

China Notices

The information in this section applies to products bearing the Chinese Complusory Certification Mark:

This device complies with the requirements in China for Safety and Quality

此为A级产品，在生活环境该产品可能会造成无线电干扰，在这种情况下可能需

要用户对其干扰采取确实可行的措施。

Australia and New Zealand Notices

The information in this section applies to products bearing the Australia C-Tick and A-Tick Compulsory Marks:

This device equipment complies with the Australian and New Zealand regulatory approvals requirements.

Warning

NETGEAR Class A products that may be utilized in domestic/residential environments may cause radio interference in which case the user may be required to take adequate measures.

LITHIUM ION AND LITHIUM METAL BATTERY PACKAGING LABEL REQUIREMENTS

Due to concerns about products shipping with Li-Ion and Li-Metal batteries, the UN developed guidelines regarding the proper testing, packaging, and labeling of these devices.

Li-Ion and Li-Metal Batteries

Li-Ion batteries are generally rechargeable, while Li-Metal batteries are generally non-rechargeable. Both types of batteries have the potential to create a fire hazard if damaged or improperly packaged.

Labeling Requirements for Li-Ion and Li-Metal Batteries

The required labels must be present on the pallets and master carton accompanied by a document such as an airway bill or other documents that indicates the following (Lithium Battery Guidance Document 2014):

- The package contains lithium ion cells or batteries;
- The package must be handled with care and that a flammability hazard exists if the package is damaged
- Special procedures that should be followed in case the package is damaged
- Contact information

To conform to IATA's Dangerous Good Regulations, different labels apply to different Watt-hour for Li-Ion and different mass for Li-metal. The calculation for Watt-hours is:

Nominal Voltage x Nominal Capacity (Ah) = Watt-hours

The volts and ampere can be found in the batteries data sheet.

Please see Table below for which proper label to use.

Required Labels for Battery Transportation (UN Manual of Tests and Criteria Part III Subsection 38.3)			
Li-Ion Battery Label Requirements			
Shipment of Battery	**Wh (Watt-hour)**	**Labels**	**Limit Battery Weight / Package**
Contained in Equipment (installed in the equipment)	Equal to or Less than 100Wh	Figure 12 or 13	PAX = 5 kg CAO = 5kg
Alone	Equal to or Less than 100Wh	Figure 12 or 13	Equal to or less than 2.7 Wh=2.5 kg OR Greater than 2.7Wh but equal to or less than 100Wh = 2 batteries
Packed separately with the Equipment (not installed in the equipment)	Equal to or Less than 100Wh	Figure 12 or 13	PAX = 5 kg CAO = 5kg
Li-Metal Battery Label Requirements			

Shipment of Battery	Mass of Lithium Metal of the battery	Labels	Limit Battery Weight / Package
Contained in Equipment (installed in the equipment)	Equal to or Less than 2g	Figure 12 or 13	PAX = 5 kg CAO = 5kg
Alone	Equal to or Less than 2g	Figure 12 or 13	Equal to or less than 0.3g=2.5kg OR Greater than 0.3g but equal to or less than 2g = 2 batteries
Packed separately with the Equipment (not installed in the equipment)	Equal to or Less than 2g	Figure 12 or 13	PAX = 5 kg CAO = 5kg

If Li-Ion Battery is more than 100Wh and Li-Metal has a Lithium mass of more than 2g, please consult Environmental Compliance Engineer for proper label to be used.

Label content requirement for shipping batteries:

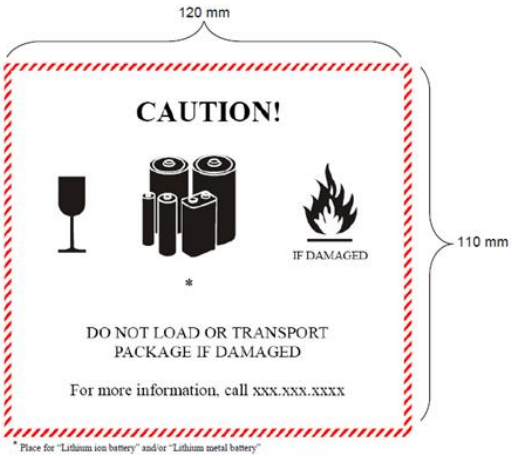

Label content for shipping smaller packages for batteries:

Exemptions for labeling
A lithium ion battery handling label is not required when a package contains not more than 2 batteries contained in the equipment. Lithium metal batteries contained in the equipment do not need any lithium battery handling label.

Powerline Device Safety Information

Follow these safety guidelines to ensure your own personal safety and to help protect your system from potential damage:

- For national approvals (approval schemes other than CB), relevant national standards for plug, socket-outlet, and direct plug-in units (for example, US) shall also be consulted while testing and approving such products according to the national standards.
- Check the electrical current for any device plugged into the filtered AC socket. Do not exceed home and product outlet ratings and electrical requirements.
- The socket-outlet shall be installed near the equipment and be easily accessible
- Only power cords and allowed to be inserted into the filtered AC socket; no other equipment with a direct plug-in is allowed. Power cords needs to be a maximum of 1m long and a minimum of 0.75mm² of cross-sectional area.
- Do not plug devices into the Powerline Pass Thru Adapter filtered AC outlet that exceed the product ratings. The output voltage of the filtered AC outlet is the same as the power outlet that the Powerline Pass Thru Adapter is plugged into. To help avoid damaging your system, be sure that the attached devices are electrically rated to operate with the power available in your location.
- If the input AC voltage is less than 100 Vac, the device plugged into the filtered AC socket of the Powerline Pass Thru Adapter might not perform as well as expected.
- DO NOT PLUG MAJOR HOME APPLIANCES into the filtered AC socket or into an attached power strip. The device is not intended to be used with home appliances such as air conditioners, power tools, space heaters, fans hair dryers, ovens, or refrigerators.
- Actual data throughput will vary. Network conditions and environmental factors, including volume of network traffic, building materials and construction, and network overhead, lower actual data throughput rate.
- Do not service any product except as explained in your system documentation.
- Opening or removing covers that are marked with the triangular symbol with a lightning bolt can expose you to electrical shock. Only a trained service technician should service components inside these compartments.
- Use the product only with approved equipment.
- Allow the products to cool before removing covers or touching internal components.
- To help avoid damaging your system, be sure that the voltage selection switch (if provided) on the power supply is set o match the power available at your location:
    - 110 volts (V), 60 hertz (Hz) in most of North and South America and some Far Eastern countries such as south Korea and Taiwan
    - 100, 50 Hz in eastern Japan and 100, 60Hz in western Japan
    - 230v, 50Hz in most of Europe, the Middle East, and the Far East
- The peripheral power cables are equipped with three-prong plugs to help ensure proper grounding. Do not use adapter plugs or remove the grounding prong from a cable.
- Observe extension cable and power strip ratings. Make sure that the total ampere rating of all products plugged into the extension cable or power strip does not exceed 80 percent of the ampere ratings limit for te extension cable or power strip.
- To help protect your system from sudden, transient increases and decreases in electrical power, use a surge suppressor, line conditioner, or uninterruptible power supply (UPS).

Rack Mount Safety Instructions

This information applies to the installation of NETGEAR rack mount products

- **Ambient operating temperature**. If the switch is installed in a closed or multiunit rack assembly, the ambient operating temperature of the rack environment might be greater than the ambient temperature of the room. Therefore, consider installing the equipment in an environment compatible with the maximum rated ambient temperature.
- **Reduced airflow**. Mount the equipment into a rack so that the amount of airflow required for safe operation is not compromised.
- **Mechanical loading**. Mount the equipment into a rack so that a hazardous condition does not arise due to uneven mechanical loading.
- **Circuit overloading**. Consider the equipment's connection to the power supply circuitry and the effect that any possible overloading of circuits might have on overcurrent protection and power supply wiring. Consider equipment nameplate ratings when addressing this concern.
- **Reliable grounding**. This product requires reliable grounding to be maintained at all times. To ensure this, ground the rack itself. Pay particular attention to power supply connections other than the direct connections to the branch circuit (for example, the use of power strips).
- **Clearance**. Leave enough clearance in front of the rack (about 25 inches) to enable you to open the front door completely and in the back of the rack (about 30 inches) to allow for sufficient airflow and ease in servicing.

NETGEAR, Inc., 350 E. Plumeria Avenue, San Jose, CA 95134 USA

July 2014

203-11275-10